REVISED 2/21/12

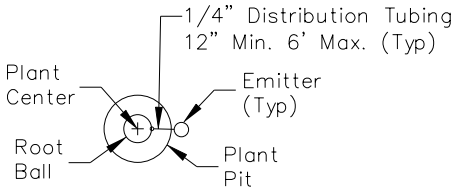

SHRUB EMITTER
SINGLE OUTLET

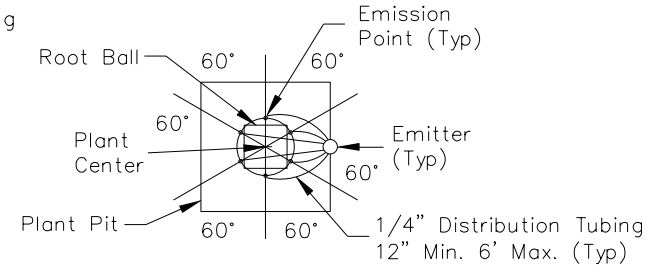

TREE EMITTER – MULTI OUTLET
15 GAL. TO 42" BOX TREES

(SEE EMITTER SCHEDULE)

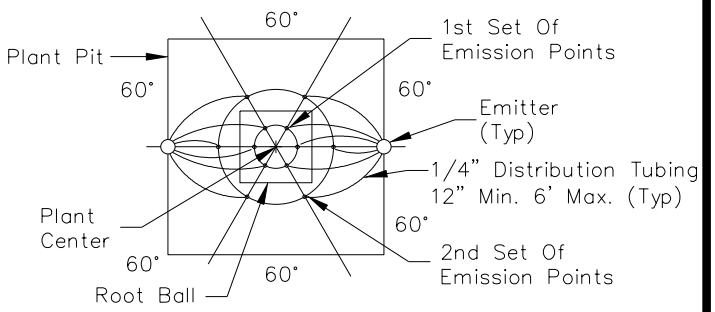

TREE EMITTER – MULTI OUTLET
48" BOX TO 60" BOX TREES

(SEE EMITTER SCHEDULE)

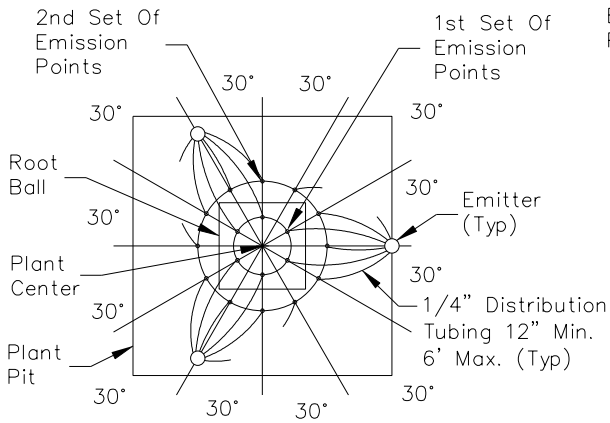

TREE EMITTER – MULTI OUTLET
66" BOX TO 84" BOX TREES

(SEE EMITTER SCHEDULE)

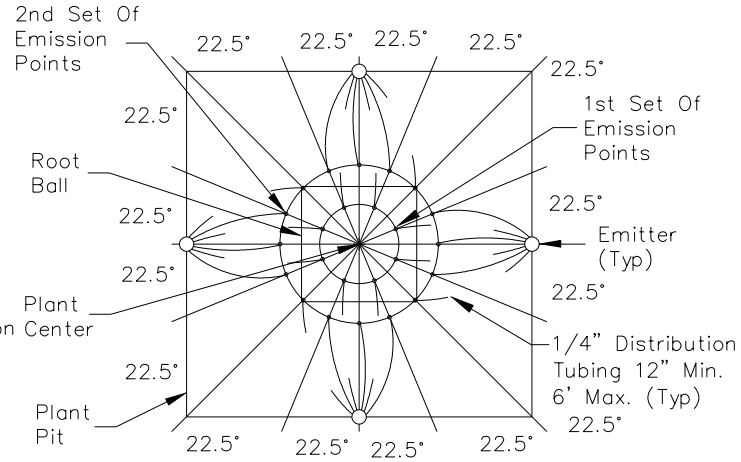

TREE EMITTER – MULTI OUTLET
96" BOX TREES

(SEE EMITTER SCHEDULE)

EMITTER SCHEDULE			
Tree Size	Number Of Multi Outlet Emitters – Outlet Quantity = Emitter GPH Total	Distance From Trunk	
		1st Set Of Emission Points	2nd Set Of Emission Points
15 Gal.	1–2 GPH=12 GPH	3 @ 12"	
24" Box	1–2 GPH=12 GPH	4 @ 18"	
30" Box	1–2 GPH=12 GPH	6 @ 21"	
36" Box	1–2 GPH=12 GPH	6 @ 24"	
42" Box	1–2 GPH=12 GPH	6 @ 27"	
48" Box	2–2 GPH=24 GPH	6 @ 12"	4 @ 42"
54" Box	2–2 GPH=24 GPH	6 @ 15"	5 @ 45"
60" Box	2–2 GPH=24 GPH	6 @ 18"	6 @ 48"
66" Box 72" Box	3–2 GPH=36 GPH	6 @ 24"	12 @ 54"
78" Box 84" Box	3–2 GPH=36 GPH	6 @ 30"	12 @ 60"
≥ 90" Box	4–2 GPH=48 GPH	8 @ 33"	16 @ 66"

DETAIL NO.	City of Scottsdale Standard Details	APPROVED BY:	IRRIGATION EMITTER LAYOUT	DETAIL NO.
2641-2		Scottsdale Standards & Specifications Committee		2641-2