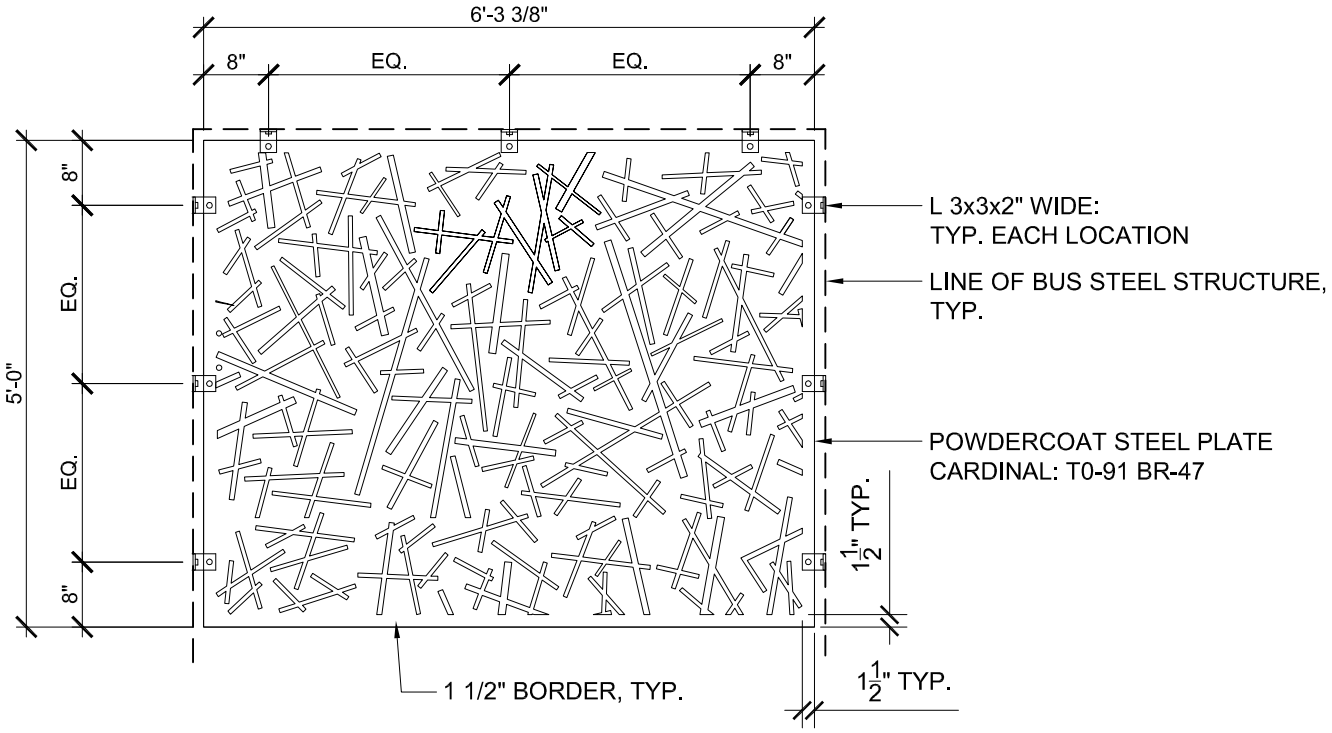

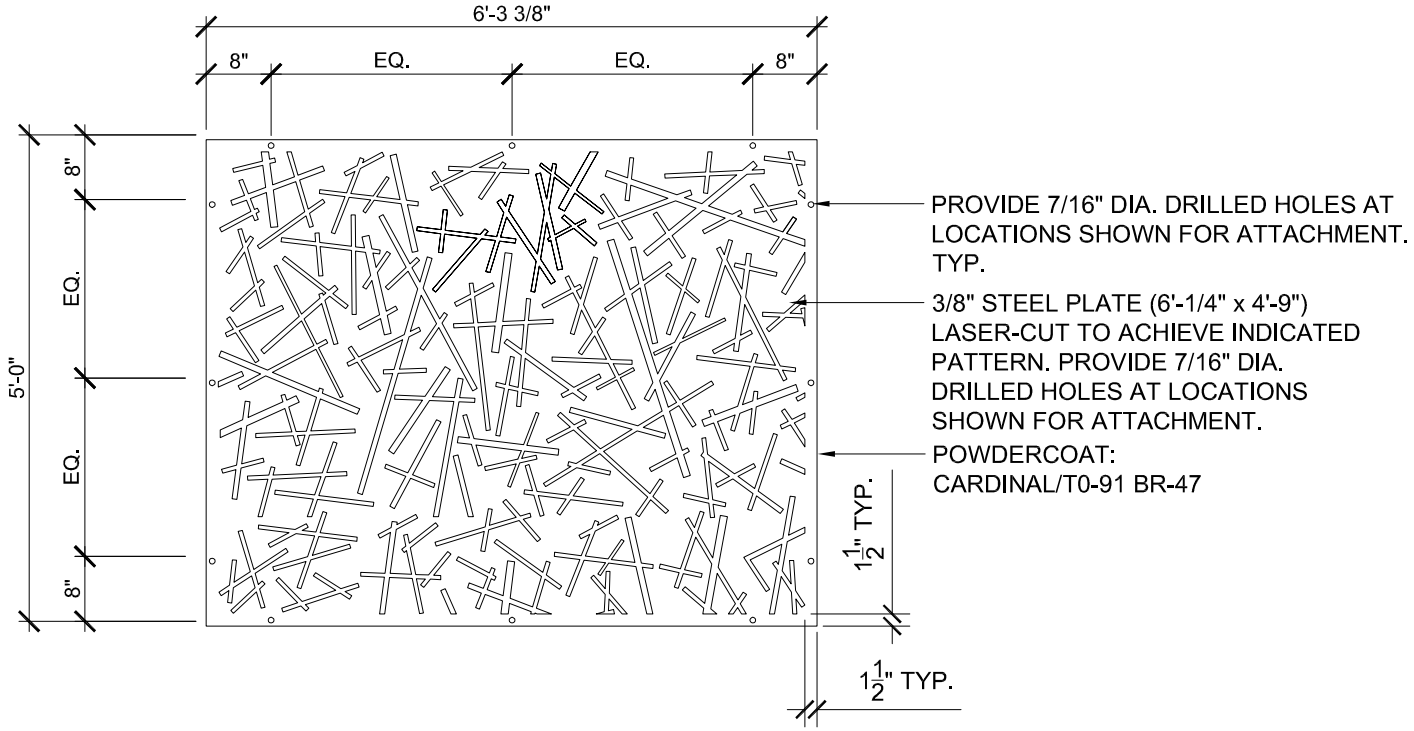

SEGMENT 6 - BUS SHELTER
MESQUITE BOSQUE WALL PANEL
DIMENSIONS: 6'-3 3/8" x 5'-0"
(1 to 1 SCALE)