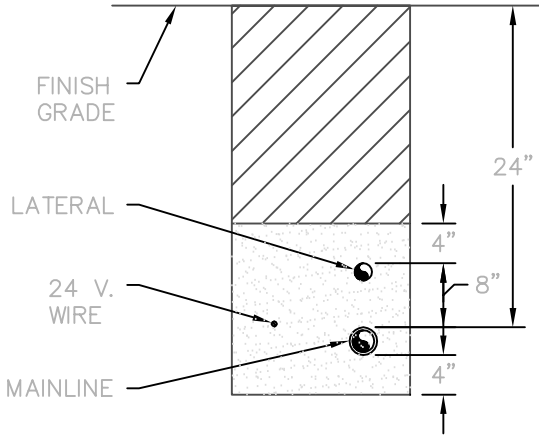

MAINLINE, LATERAL & 24V WIRE

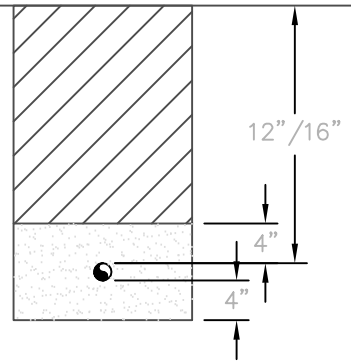

PVC LATERAL

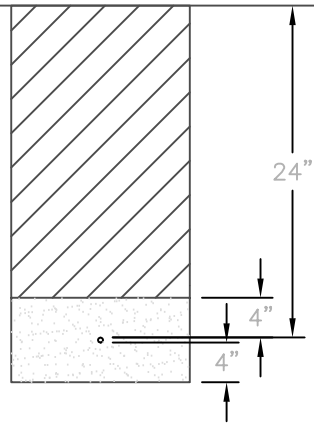

24V WIRE

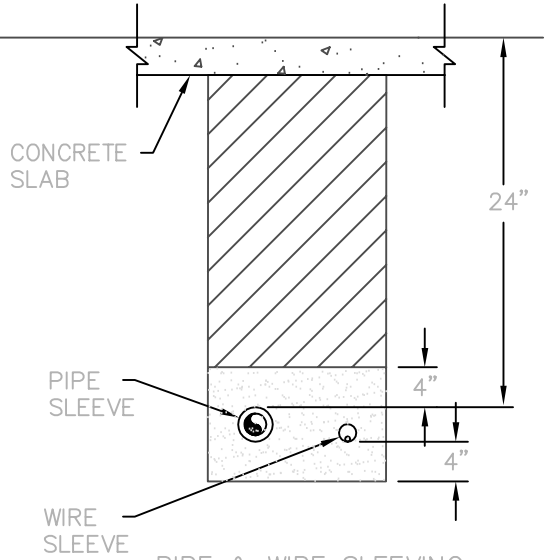

PIPE & WIRE SLEEVING

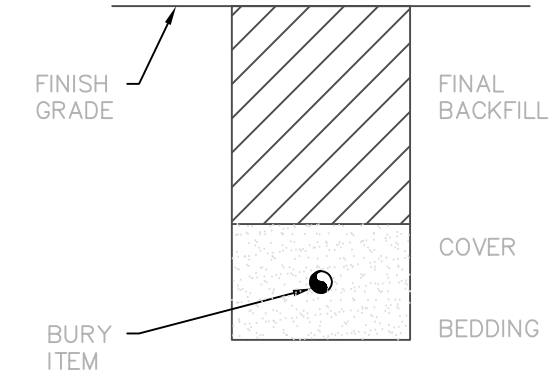

EXCAVATED MATERIAL SHALL BE FINELY SCREENED WITH NO ROCKS LARGER THAN 1".

BEDDING AND COVER MATERIAL SHALL BE TOPSOIL WITH NO ROCKS.

NOTES:

1. BEDDING SHALL BE PLACED AND LEVELED PRIOR TO INSTALLATION OF BURY ITEM.
2. BACKFILL SHALL BE PLACED IN MAXIMUM 6" LIFTS.
3. SLEEVE ALL PIPE AND WIRE SEPARATELY. SLEEVE 2 X DIA. OF PIPE. ONE PIPE PER SLEEVE.
4. ALL PIPE TO BE INSTALLED PER MANUFACTURES SPECIFICATIONS WITH PIPE LABELING FACING UP FOR INSPECTION PURPOSES. PROVIDE A MINIMUM OF 2" CLEARANCE TO SIDE OF TRENCH AND BETWEEN PIPES.
5. ALL 120 V. WIRING SHALL BE INSTALLED IN ACCORDANCE WITH LOCAL CODE REQUIREMENTS.
6. TAPE AND BUNDLE IRRIGATION CONTROL WIRES EVERY 10'. PROVIDE LOOSE 20" LOOP AT ALL CHANGES OF DIRECTION OVER 30°.
7. ALL REMOTE CONTROL VALVE WIRING NOT INSTALLED WITH MAINLINE PIPE SHALL BE INSTALLED IN A MINIMUM 2" SCHEDULE 40 GREY ELECTRICAL CONDUIT OR AS APPROVED.
8. "NON-POTABLE" WARNING TAPE TO BE INSTALLED ON PRESSURIZED MAINLINES 3" AND ABOVE.

REVISED: 7/15/03

DETAIL NO. 2642	City of Scottsdale Standard Details	IRRIGATION TRENCHING	DETAIL NO. 2642