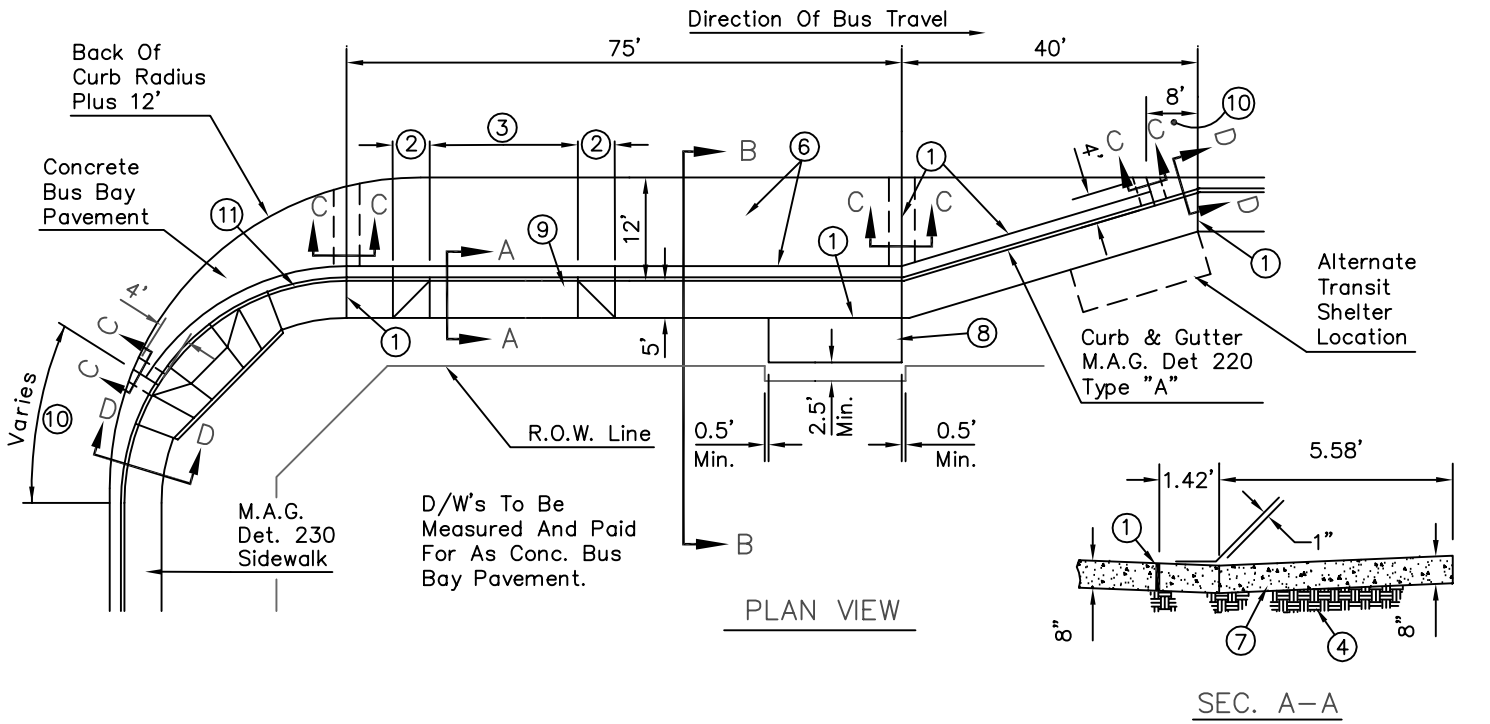

1. 1/2" BITUMINOUS PREFORMED EXPANSION JOINT FILLER, A.S.T.M. D–1751 PER MAG SECTION 729.
2. TRANSITION CURB FACE FROM 6" TO 0" HEIGHT IN 5'
3. D/W WIDTHS & LOCATIONS VARY, SEE PLANS. MAINTAIN 10' MIN. CLEARANCE BETWEEN DRIVEWAYS AND SHELTER PAD. WHEN DRIVE–WAY WIDTH EXCEEDS 22', PROVIDE A CONTRACTION JOINT ON D/W ℄.
4. SUBGRADE PREPARATION PER MAG SECTION 301.
5. CONCRETE PAD TO BE POURED SEPARATELY FROM CONCRETE BUS BAY PAVEMENT.
6. CONTRACTION JOINTS IN THE BUS BAY PAVEMENT SHALL MATCH THOSE IN THE CURB.
7. CONCRETE SHALL BE CLASS "A" PER MAG SECTION 725
8. TRANSIT SHELTER PAD, PER COS STD DETAIL 2269.
9. NEW CONCRETE D/W TO BE POURED WITH BUS BAY PAVEMENT.
10. CURB & GUTTER TO BUS BAY PAVEMENT TRANSITION.
11. CURB RADIUS AS SHOWN ON THE PLANS

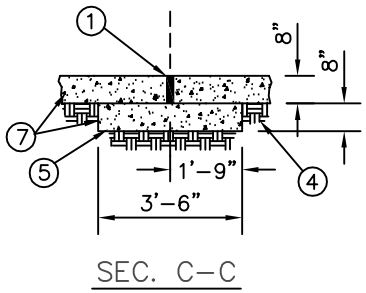

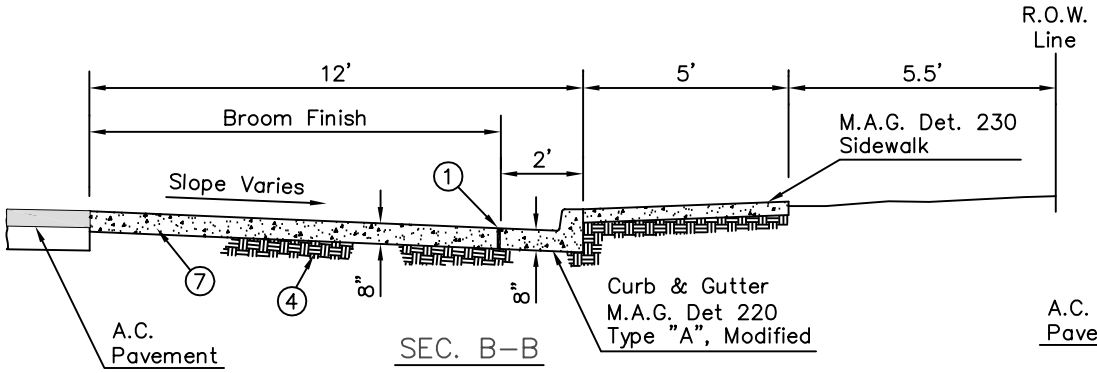

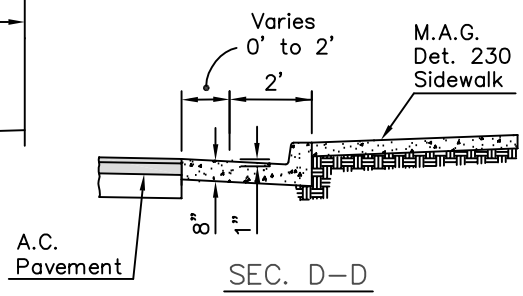

REVISED 1/4/93

DETAIL NO. 2267	City of Scottsdale Standard Details	APPROVED BY:	FAR - SIDE BUS BAY	DETAIL NO. 2267