REVISED 4/7/00

CL-3

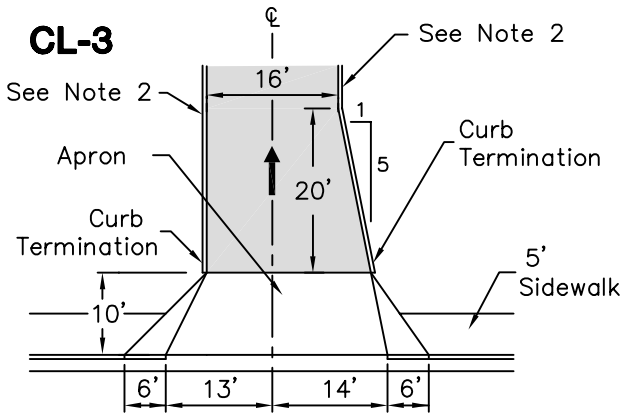

ONE WAY INGRESS

CL-4

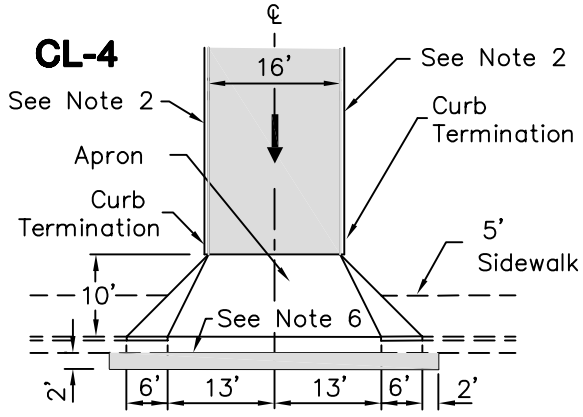

ONE WAY EGRESS

CL-1

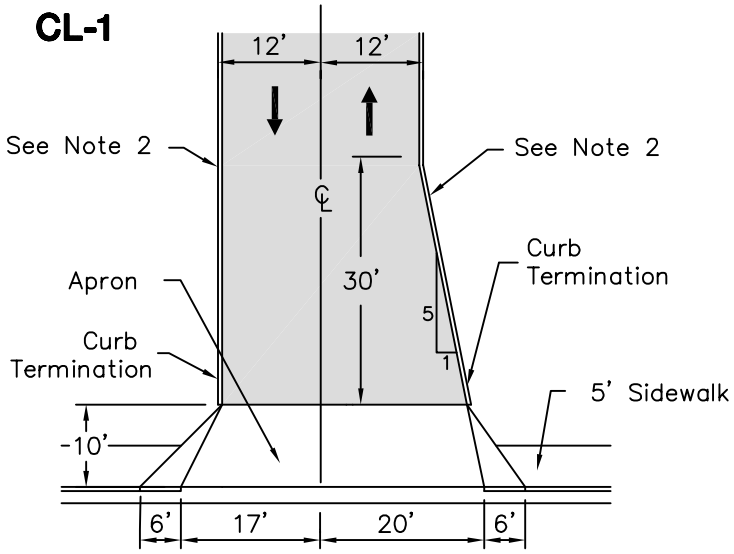

TWO WAY

CL-2

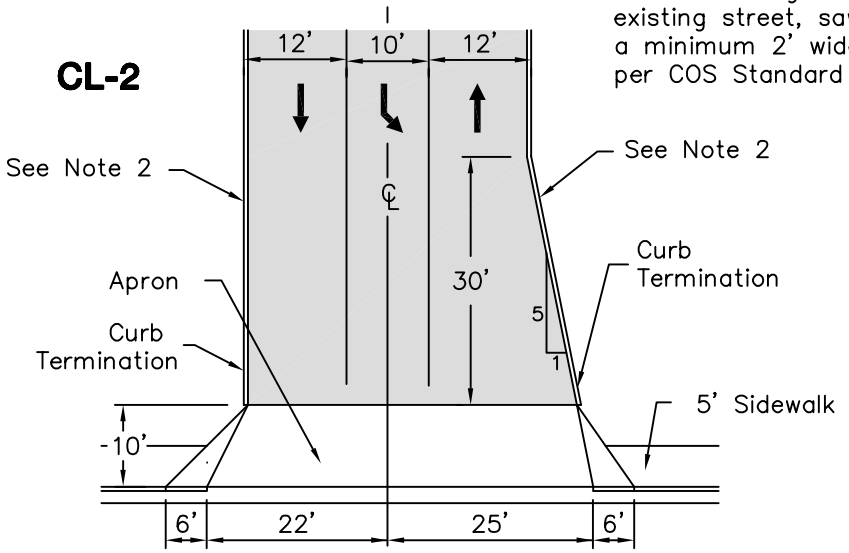

TWO WAY WITH TWO EGRESS LANES

CONSTRUCTION NOTES

1. Sidewalk shall conform to MAG Standard Detail 230 and C.O.S. Sec. 340.
2. Curb as called for on plans.
3. Curb & Gutter shall conform to MAG Standard Detail 220. Single Curb shall conform to MAG Standard Detail 222.
4. Driveway Entrances shall conform to COS Standard Detail 2250 except for modifications as noted. Driveways shall be 2–1/2" A.C. A–19 on 6" A.B.C. unless otherwise noted. See plans for driveway limits.
5. Curb termination similar to MAG Std. Det. 222.
6. When installing new driveways along an existing street, sawcut, remove & replace a minimum 2' wide strip of A.C. pavement per COS Standard Detail 2200.

DETAIL NO. 2256	City of Scottsdale Standard Details	COMMERCIAL/INDUSTRIAL DRIVEWAYS-TYPE CL	DETAIL NO. 2256