TRANSPORTATION

5

This chapter provides ordinance, policy, and standards establishing minimum design criteria for modifying and constructing transportation facilities within the City of Scottsdale. It addresses traffic impact analysis, right-of-way considerations, street geometrics, traffic signal design, signs and markings, transit amenities, bikeways, pedestrian facilities, neighborhood traffic management, and flexible pavement design.

This information is intended for use in the planning, design, and the preparation of final plans. For information on Scottsdale Airport/Airpark development guidelines, see www.scottsdaleaz.gov/airport/regulatorydocs.asp.

contents

5-1 Traffic Impact Studies (TIMA)
5-2 Right-Of-Way Management
5-3 Geometrics
5-4 Traffic Signal Design
5-5 Signs and Markings
5-6 Transit
5-7 Bikeways
5-8 Pedestrian Facilities
5-9 Neighborhood Traffic Management
5-10 Flexible Pavement Design

Transportation
7447 E Indian School Road
Suite 205
480-312-7696

One Stop Shop
7447 E Indian School Road
Suite 100
480-312-2500

Current Planning
7447 E Indian School Road
Suite 105
480-312-7000

Plan Review
7447 E Indian School Road
Suite 105
480-312-7080

www.ScottsdaleAZ.gov/Design/DSPM

transportation

TRAFFIC IMPACT STUDIES

5-1

Transportation Impact & Mitigation Analysis (TIMA) is necessary to determine the need for modifications to the existing and planned transportation system as a result of proposed development. This section presents the analysis process and requirements for completing a traffic impact and mitigation analysis. The traffic-engineering consultant prepares the required level of analysis and presents the findings to the Planning Commission and City Council. The applicant is responsible for ensuring that the consultant is present at public hearings and is prepared to present the report findings.

Transportation
7447 E Indian School Road
Suite 205
480-312-7696

One Stop Shop
7447 E Indian School Road
Suite 100
480-312-2500

Plan Review
7447 E Indian School Road
Suite 105
480-312-7080

contents

Sections

5-1.000 General Information
5-1.100 Initiating Impact & Mitigation Analysis
5-1.200 Extent of Studies
5-1.300 Study Area
5-1.400 Context & Framework
5-1.500 Non-Site Traffic Forecasts
5-1.600 Site Traffic Generation
5-1.700 Site Traffic Distribution & Assignment
5-1.800 Analysis
5-1.900 Site Access & Off-Site Improvements
5-1.1000 On-Site Circulation
5-1.1100 TIMA Report

Figures

5.1-1 Level of Service Default Data
5.1-2 TIMA Report Outline

TRANSPORTATION IMPACT STUDIES

GENERAL INFORMATION

A. Major Issues Addressed in Transportation Analysis

The TIMA document will address such issues as:

1. The current transportation system and operational characteristics in the site vicinity,
2. The interface between the on-site circulation system and the adjacent circulation system,
3. The intensity and character of the development,
4. Trip generation,
5. Distribution and assignment estimates, and
6. Impacts of the development on the existing and planned transportation systems.

B. Study Timing

A Transportation Impact and Mitigation Analysis (TIMA) may be required for general plan amendment, rezoning, and use permit applications. The need for, and extent of, the study shall be based on the criteria described in this guide and any analysis provided in previous applications. Whatever level of analysis is required, studies shall be submitted in final form prior to scheduling a development proposal for public hearing.

C. Study Preparation Process

The study preparation process should include open discussions between the applicant, the study consultant, and city of Scottsdale staff. Therefore, project discussion should begin when the application for the development is initiated, not after a development plan is finalized and a traffic study completed. This will ensure that the objectives of both the land owner/developer and the city can be met.

After a pre-application meeting, issues and process will be determined and discussed at a joint meeting with staff members from the city's Planning and Transportation Departments. Members from these departments, representing a "Development Review Team" will determine if any at-large issues are affected by the proposal. The Transportation Department Staff and the Project Coordination Manager will establish a timetable and oversee the TIMA document preparation process. A meeting will be arranged to review the scope of the work and the proposed timetable for completion.

Once the TIMA document is completed it will be submitted to the city for review. The document will be reviewed for completeness and compliance with TIMA Guidelines within five working days. This completeness review will only determine if all required information and analysis has been provided. It will not assess the quality of the submitted report or its findings. If the document is determined to be complete, a meeting will be scheduled to review the report and findings with the applicant. Transportation staff will conduct a thorough review of the document and prepare a summary report of the findings. This summary and a copy of the TIMA document will be included in the staff report for the case. Minor revisions may be required before the project will be scheduled for the requested hearing.

5-1.100 INITIATING IMPACT & MITIGATION ANALYSIS

A. Pre-application Meeting

The procedures outlined herein present the minimum information required to determine what level of traffic analysis is required. The purpose of the pre-application conference is to provide guidance and direction to the applicant concerning the nature and extent of the analysis. Failure by the applicant to provide these items may result in delay in initiating the TIMA process. At a minimum, the following items must be provided for review:

1. Vicinity map
2. Current aerial map
3. Summary of existing building or development on the site – examples: existing building area and land use, current zoning, approved site plan, previous zoning history, etc.
4. Preliminary summary of proposed development by land use – examples: building area, number of employees, leasable tenant space, acreage, etc.
5. Proposed site plan

B. Warrants for Studies

Proposed projects will fall into one of three categories for purposes of transportation impact and mitigation analysis. The first category is proposed projects that are deemed to have insignificant traffic impacts. The second category is projects that have localized impacts to the city's transportation system. The third category is proposed developments that have significant impacts to the transportation system that may extend beyond the vicinity of the site. For those situations where it is questionable as to which category is appropriate, the Traffic Engineering Director will make the final determination. The Traffic Engineering Director also has the authority to waive the requirement for a traffic impact analysis for unusual situations that fall outside of the following guidelines or where the analysis is deemed to be unnecessary based on previous studies or current traffic conditions.

"Existing, allowed land use" will be interpreted as development that is allowed under the city's current zoning and General Plan designation. Development may be restricted to previously approved site plans and development programs, where prescribed by zoning stipulations. For those situations where it is questionable as to what level of development is allowed on the site, the Zoning Administrator will make the final determination.

5-1.101 CATEGORY 1

If a proposed development is anticipated to generate less daily trips than it would under the existing, allowed land use, and generates less than 100 vehicle trips per hour in the "peak period on the adjacent street system," then a transportation impact and mitigation analysis is not necessary. The following sizes of different land use classifications are deemed to generate less than 100 trips in the peak hour, and therefore do not require any analysis.

- < 100 residential dwelling units,
- < 6,000 gross square feet retail,
- < 25,000 gross square feet office,
- < 100,000 gross square feet industrial/employment
- < 160 hotel / motel / resort rooms,
- < 30,000 gross square feed medical office

For a development application that falls under this category, the applicant will be required to submit the following:

1. Site plan
2. Adjacent street volumes
3. Accident history
4. Trip generation comparison to the existing land use

CATEGORY 2 5-1.102

If a proposed development is anticipated to generate more daily trips than it would under the existing, allowed land use, and generates less than 100 vehicle trips per hour in the "peak period on the adjacent street system," then a Category 2 study is required to determine the extent of the transportation impacts of the proposed development.

For a development application that falls under this category, the traffic analysis will include the following:

1. Site plan
2. Adjacent street volumes
3. Accident history
4. Trip generation comparison to the existing land use
5. Level of service analysis of roadway segments and intersections adjacent to the site

The following considerations are some of the development and transportation system characteristics that will be evaluated in determining the extent of the study area and the need for additional or expanded analysis such as a traffic signal warrant analysis.

- Current traffic volumes and level of service on the adjacent streets
- Driveway location and volume
- Collision data on adjacent street segments and at nearby intersections
- Special conditions and circumstances particular to the development or the transportation system

CATEGORY 3 5-1.103

If a proposed development is anticipated to generate more daily trips than it would under the existing, allowed land use, and generates more than 100 vehicle trips per hour in the "peak period on the adjacent street system, then a Category 3 study is required to determine the extent of the transportation impacts of the proposed development.

For a development application that falls under this category, the traffic analysis will include the following:

1. Site plan
2. Adjacent street volumes
3. Accident history
4. Trip generation comparison to the existing land use
5. Level of service analysis of roadway segments and intersections adjacent to the site
6. Level of service analysis of major roadway segments and intersections in the vicinity of the site

The following considerations are some of the development and transportation system characteristics that will be evaluated in determining the extent of the study area and the need for additional analysis such as neighborhood traffic mitigation.

- Current traffic volumes and level of service on the adjacent streets
- Driveway location and volume
- Proximity to and potential impact upon nearby residential areas
- Collision data on adjacent street segments and at nearby intersections
- Special conditions and circumstances particular to the development or the transportation system

5-1.200 EXTENT OF STUDIES

5-1.201 CATEGORY 2 STUDY

This study will include the following type of development:

1. A site plan with proposed access points;
2. An area map showing the surrounding transportation system, including the locations of the signalized intersections within two miles of the nearest signalized intersection on adjacent streets in all directions;
3. A market study, if applicable;
4. Most recent accident rates and rankings on adjacent roadway segments and intersections within the study area;
5. Current traffic volumes on the street system within the study area; trip generation;
6. Trip distribution;
7. Traffic assignment;
8. Existing levels of service on adjacent roadways, including signalized intersections within the study area; and
9. Horizon year levels of service with and without the proposed development.

The Category 2 study need not be a detailed analysis of the present and future conditions. No elaborate data collection effort or extensive computer modeling is usually necessary for such a study. Its purpose is to provide an analysis of existing and anticipated traffic conditions on the adjacent transportation system and identify potential concerns that may need additional analysis.

5-1.202 CATEGORY 3 STUDY

A complete TIMA analysis will be required for any proposed development that is anticipated to generate more than 100 trips in the peak hour of the adjacent street. The type and extent of analysis required for a complete TIMA analysis will depend on the development under consideration and its potential impact on the study area transportation network. Large developments with regional impacts will require extensive analysis and sophisticated computer modeling applications; smaller developments might only require manual trip distribution and assignment techniques. The city will determine the extent of the Category 3 study.

5-1.300 STUDY AREA

The study area for a Category 2 study will be the roadway segments and intersections located adjacent to the site. Major intersections within one mile of the site may be included in the study area based upon the guidelines noted above.

The study area for a Category 3 study will be the intersections, and connecting roadway segments, within two miles of the site or the nearest signalized intersection that satisfy either of the following traffic conditions:

- Intersections with entering volumes that currently exceed 40,000 vehicles per day, or
- Intersections with approach volumes in the design year that are increased by 5% or more as a result of the traffic generated from the proposed development.

CONTEXT & FRAMEWORK 5-1.400

EXISTING CONDITIONS 5-1.401

The reports for either a Category 2 or Category 3 study will provide current approach volumes for twenty-four hours of a typical weekday, and turning movement volumes in fifteen minute intervals for the time periods of 7:00 to 9:00 a.m. and 4:00 to 6:00 p.m., for all intersections of streets that are classified as major collector, minor arterial, major arterial, couplet, parkway, expressway, or freeway in the study area. The results of a level-of-service analysis, for the peak, fifteen-minute periods in the morning and in the evening for the existing conditions, will be included in the report. The report will also list the accident rate, frequency, and severity for all intersections and roadway segments in the study area for the most recent available year.

HORIZON YEAR(S) 5-1.402

For a Category 2 study, the traffic analysis will be based on traffic conditions for the build-out or completion year of the development. In some cases staff may require an additional horizon year if there are significant changes anticipated to the surrounding infrastructure or traffic volumes.

For a Category 3 study, the traffic analysis will be based on traffic conditions for the build-out or completion year of the development, and a minimum five year projection from the anticipated build-out date, which may be rounded up to the closest five-year increment (2010, 2015, 2020, etc.) If the project is a large, multi-phased development, the initial horizon year will be the date that corresponds to the opening of the first major phase of development. In some cases staff may require an additional horizon year for multi-phase projects or projects with significant changes anticipated to the surrounding infrastructure or traffic volumes.

The study will provide morning and evening peak hour approach and turning movement volumes for each intersection in the study area for the required horizon years. Level-of-service analyses for these peak hour conditions, without the site traffic and with the site traffic, will be included in the report.

PEAK TRAFFIC HOUR(S) 5-1.403

The report will analyze the peak traffic periods on the adjacent street system during the morning and evening, peak, fifteen-minute periods. The report will also analyze the peak traffic periods for the development, should these periods occur at different times or on different days from the peak periods of the adjacent street system.

BACKGROUND STUDY AREA DATA 5-1.404

The city of Scottsdale Traffic Engineering Division prepares a traffic volume and accident data report for every even-numbered year. This information will be available to the traffic-engineering consultant. The consultant will use the most recently available data, at a minimum. If data from earlier years is deemed pertinent, the consultant may utilize it to supplement the most recent data.

The city of Scottsdale Traffic Engineering Division periodically obtains traffic volume information at various locations. This information will be available to the consultant. The consultant may not use traffic volume data older than fifteen months as current information. However, it may be utilized for supplemental purposes. If traffic volume data more recent than fifteen months is not available, then the developer is responsible for obtaining the information directly.

The city of Scottsdale Transportation Planning Division prepares traffic volume projections for five-year increments. This information will be available to the consultant. However, the information will need to be reviewed by the consultant for applicability to the TIMA.

Adjustment and recalculation may be necessary. In the event that the proposed development is very large in terms of anticipated traffic generation or in terms of deviation from the Scottsdale General Plan, comprehensive traffic projection modeling may be necessary.

5-1.405 REVIEW OF ANTICIPATED OFF-SITE CHANGES

The Transportation Department will provide copies of TIMAs prepared for previous proposed developments that may be pertinent to a current analysis. The city will also provide other transportation related reports that may be of assistance. The consultant will be responsible for reviewing these reports and incorporating their data, conclusions, and recommendations where appropriate.

The consultant will be responsible for obtaining copies of the current Circulation Element of the General Plan for the city of Scottsdale, and adhering to the policies and guidelines it contains.

5-1.406 FIELD RECONNAISSANCE AND DATA COLLECTION

If current traffic volume data is not available, the consultant will be responsible for obtaining traffic volume data in accordance with the requirements of the study, as stated previously. The consultant must also obtain speed limit information and analyze sight distance availability and requirements. The Transportation Planning Division will provide information regarding bicycle and transit facilities in the vicinity of the site of the proposed development. The consultant will be responsible for incorporating the needs of these facilities into the analysis and report.

5-1.500 NON-SITE TRAFFIC FORECASTS

A. Components of Non-Site Traffic

Estimates of non-site traffic are required for a complete analysis of horizon-year conditions. These estimates represent the "base" conditions, that is, without the site development.

B. Methodology

There are two principle methods of projecting off-site traffic that are acceptable: use of area-wide modeled data and trends or growth rates. Each method has its appropriate use depending on the availability of data and the size of the proposed development.

In most cases, modeled data will be available from the city of Scottsdale Transportation Department. In those cases where this data is not available, the city will determine if the data needs to be produced for an adequate analysis, or if a trends analysis will suffice.

C. Analysis of Future Conditions

Future traffic demand estimates are developed by adding the estimated site generated traffic, all approved (or potential) development in the area, and current traffic volumes adjusted for general growth in the area. The consultant will determine the levels of service in the study area based on the non-site traffic for the horizon year.

5-1.600 SITE TRAFFIC GENERATION

5-1.601 GENERAL PROCEDURE

The potential traffic impacts of a planned development are forecast for the projected conditions in the horizon year(s) of the project. The first step in the process is trip generation.

The trip generation process provides an estimate of the number of trips that will be generated due to the new development. Generally, the trip generation process consists of applying trip rates or equations for different types and sizes of land use development to the proposed land uses in the development to determine the total number of new trips added to the system. Trip generation will be calculated for the a.m. and p.m. peak hours and the daily period.

SOURCES 5-1.602

The sources from which trip generation rates are taken are extremely important in assuring an accurate estimate of the impacts of a proposed development. In general, whatever the source, it is important to establish that the trip rate for a given land use is representative of the proposed development land use. Such items as size, location, services, and number of studies should be considered before using any data source.

A. State And Local Data Sources

In most cases, assuming a similar number of studies, local trip generation rates will be more accurate for predicting the trip generation of the development proposal. If such data is available, it should be reviewed with city staff to determine its applicability to the site.

B. National Data Sources

Several national data sources are available. The most widely used is Trip Generation, published by the Institute of Transportation Engineers (ITE). Other sources include: NCHRP Report 187, Transportation Research Board, 1978 and Development and Application of Trip Generation Rates, Federal Highway Administration, 1985.

National sources can be used as starting points in estimating the amount of traffic that may be generated by a specific building or land use. Whenever possible, or when the number of studies on which the rate is based is limited, these national rates should be adjusted to reflect local conditions. National sources should not be used without the application of sound judgment.

C. Collection of Additional Data

If it is determined that a local rate is most appropriate, but existing local data samples are limited, the consultant will be required to collect additional local data to provide a credible sample size on which to base the trip generation estimate. Local trip generation data should be collected at sites that exhibit similar characteristics to the development being studied and that are self-contained, with adequate parking not shared by other activities. The consultant should follow the guidelines contained in Trip Generation Handbook: An ITE Recommended Practice, ITE, 2000.

SELECTION OF TRIP GENERATION RATES OR EQUATIONS 5-1.603

As described in Trip Generation Handbook, the following step-by-step procedure must be used for determining whether the equation or the rate should be used:

1. Calculate and compare the forecasted trips using both the regression equation and the trip rate. Generally, if the forecasted trips calculated from the two methods are within 5% of each other, use the method that most closely represents the data points in the range of the independent variable being used. If the difference is greater than 5%, go to step 2.
2. Use the equation when there are at least 20 data points that are distributed over the range of values typically found for the independent variable, when there are few erratic data points, and when the y-intercept for the equation is zero or near zero. If these conditions are not met, go to step 3.

3. Compare the lines representing the equation and the rate to determine which best fits the data points at the size of the independent variable in question. Use the equation or the rate whose line best fits the data points at the size of the independent variable in question. If neither line fits the data points, or if both fit equally well, go to step 4.
4. Review the standard deviation of the rate and the R^2 value of the equation. These measures provide information about how well the lines, in general, fit the data points. A low standard deviation (less than 110% of the average rate) is good. A high R^2 value (more than 0.75 for the equation) is good. Use the equation or the rate, depending on how well its measure satisfies these standards. If a decision still cannot be made, go to step 5.
5. Since at this point, there is no logical and valid basis for choosing between the rate and the equation, the user must choose the method to use based only on their best judgment, or collect an acceptable set of local data from which a local rate or equation can be derived.

A. Use of Average, Minimum, and Maximum Rates

Most trip generation data sources report the average rate based on a group of studies for land use. Sometimes maximum and minimum observed rates and some statistical measure of the spread of data between the extremes are also provided. When comparing average rates from different data sources, be sure to check the consistencies and differences in how the averages were computed.

When using average trip rates, all applicable adjustments must be made for variations in the independent variable. In addition, trips should be estimated for the average rate plus one standard deviation to determine how the results of the analysis would be affected.

B. Use of Equations

As described above, careful consideration must be given to the use of rates versus equations. In most instances, equations provide a better correlation with actual data than do average rates. In any event, the selection and reasons for using either equations or rates should be documented in the report.

C. Choosing the independent variable

The choice of the independent variable can be one of the most important decisions in estimating trip generation. The selected variable should be easily projected with reasonable accuracy. When information is available for more than one independent variable, the predictive accuracy of both the independent variable and the trip generation rate or equation must be considered. However, it is also important to check the sample size for each given independent variable. In the case of two variables with a similar correlation, the variable with the larger sample should be used. Trip rates or equations based on small sample sizes should be used with caution.

In the planning stage, some variables, such as employment and parking, are estimated on the basis of other variables, such as gross square feet of building space. When little is known about the size of the generator except the proposed use of the land to be developed, common development densities can be used to obtain a preliminary estimate of the independent variable. The city of Scottsdale Zoning Ordinance should be checked to determine the appropriate density parameters (www.scottsdaleaz.gov/codes).

Floor area is one of the most commonly used independent variables. There are, however, different ways to compute floor area, and there are different definitions. These must be consistent when determining a trip generation rate, and they should correspond to accepted floor area definitions. For office buildings, these include gross floor area, gross leasable area, and net leasable area. Care should be taken to exclude areas such as large atriums, which do not by themselves generate trips. Gross leasable area is commonly used for shopping centers.

CHOOSING THE APPROPRIATE TIME PERIOD(S) 5-1.604

The range of average rates for different time periods will be examined to determine when the generator peaks in traffic flow and to define the relationship between the peak generation and the peaking characteristics of the adjacent street system.

When the peak hour of the generator does not correspond to either the a.m. or p.m. peak hours of the adjacent street system, that additional time period must be analyzed to determine site-specific design requirements (such as auxiliary lane storage lengths).

DAILY AND SEASONAL VARIATIONS 5-1.605

Trip generation estimates for the average weekday are appropriate analyses for most, but not all, land uses. For some land uses, more trips are generated on Friday or Saturday than on the average weekday. Those days, rather than the average weekday, may be the most appropriate design or analysis period for those uses.

Seasonal variations are also important for some land uses. As a prime example, shopping centers should be analyzed for the period between Thanksgiving and Christmas, which is traditionally the busiest shopping season. For recreational and hotel land uses the consultant must provide an analysis that adjusts the background traffic to replicate the appropriate peak season of the generator. Seasonal adjustment factors are available from the Transportation Department.

DRIVEWAY TRAFFIC VS. TRAFFIC ADDED TO ADJACENT STREETS 5-1.606

It is usually assumed that all trips entering and exiting a new development are new trips that were not made to or through the area prior to the development being completed. However, for some non-residential developments, a portion of these trips may be "captured" from trips already being made to other existing developments on the adjacent street system, or they may be merely passing by on the way from one place to another. The driveway volume for a new development may, therefore, be significantly different from the amount of traffic added to the adjacent street system. For example, retail establishments, restaurants, banks, service stations, and convenience markets attract people from the passing stream of traffic; these are known as pass-by trips.

ITEs Trip Generation Handbook contains discussions and references on the issue of pass-by trips. Because of the limited data available, adjustments for pass-by trips should be applied carefully. If pass-by trips are a major consideration, studies and interviews at similar land uses must be conducted or referenced.

MULTI-USE PROJECTS 5-1.607

Most trip generation rates and equations have been gathered at and apply to isolated single-use developments. When multiple uses are combined into one development, simply adding the single-use estimates together can result in a total trip generation estimate that is too high.

While trip rates and equations are available for shopping centers, little data exists for other multi-use projects such as downtowns, suburban mixed-use centers, or planned unit developments. Some national publications, such as NCHRP Reports, may provide data that can be useful in some cases.

Multi-use projects are another case in which any adjustments should be applied carefully because of the limited amount of data available. If this is a major consideration for the proposed development, an analysis should be performed to determine the amount of trips that would be external for single uses, but which would be internal in a proposed mixed-use development. Trip Generation Handbook provides some information on this subject.

5-1.608 SPECIAL OR UNUSUAL GENERATORS

Occasionally, a development proposal will consist of special or unusual land uses for which typical trip generation rates or equations are not available, or simply do not apply. Judgment must be applied to identify a land use or combination of land uses that best represent the trip-making characteristics of the site. The reasoning and data used by the consultant in developing a trip generation estimate for a special or unusual generator must be justified and explained in the report.

5-1.700 SITE TRAFFIC DISTRIBUTION & ASSIGNMENT

5-1.701 DISTRIBUTION METHODS

The directions from which traffic will access the site can vary depending on many factors, including:

1. The type of proposed development and the area from which it will attract traffic,
2. The presence or absence of competing developments within the same market area,
3. The size of the proposed development, and
4. The conditions on the surrounding street system.

The influence area of the development needs to be identified for the site. Ideally, the influence area should contain approximately 80% of the trip ends that will be attracted to the site. If a market study is available, it should be used in establishing the influence area. Otherwise, an influence area should be established based on a reasonable documented estimate.

The three most common methods for estimating trip distribution are by analogy, by model, and by surrogate data. In most cases, a surrogate data method can be utilized for developing the trip distribution. Utilizing this procedure involves using socioeconomic and demographic data to establish population or employment land use distributions around the site. In most cases, population can be used as the basis for estimating distribution of office, retail, and entertainment trips; employment is a reasonable surrogate for residential trips, and other trips can be similarly distributed using logical surrogates. For horizon years, land use estimates based on the city's General Plan should be utilized.

For some very large-scale developments, a trip distribution model should be utilized to estimate site trip distribution. The gravity model portion of the city's traffic forecasting model is available for this purpose.

5-1.702 TRIP ASSIGNMENT AND PASS-BY TRIPS

Once trip distribution is completed, trip assignment is used to determine the amount of traffic that will use certain roadway links within the influence area. The product of the trip assignment process is the total project-generated trips, by direction and turning movement.

Trip assignment should be made considering logical routings, available roadway capacities, left turns at critical intersections, and travel times. The assignment should also reflect the horizon year(s) and the roadway and land use conditions at that time.

As discussed in Section 5-1.600 above, many land uses do not generate only vehicle trips that are entirely new to the roadway network. A portion of their trips may simply be diverted from trips already on adjacent or nearby streets. Because of limited data and research in the area of pass-by trips, a thorough analysis is required if pass-by trips are to be accounted for in the study. The following procedure will be used:

1. For the peak hour being analyzed, determine the percentage of pass-by trips as part of the total trip generation. The basis for this estimate should be documented. Split the total trip generation number into a new trip amount and a pass-by trip amount.

2. In addition to estimating a normal trip distribution (for new trips), also estimate a trip distribution for pass-by trips (giving strong consideration to the commuting work trip).
3. Perform two separate trip assignments, based on the two distributions. One assignment applies to pass-by trips; the other assignment applies to new trips. Care must be taken, as the pass-by trip assignment is more complicated. Pass-by assignment percentages should not automatically be applied to two-way traffic, since an outbound pass-by trip may use a different route than an inbound pass-by trip. Also, due to the diversion concept, pass-by trip assignment involves subtracting trips from some existing traffic movements and assigning the trips to other movements.
4. Combine the numerical pass-by and new trip assignments. Remember the subtraction required on some vehicle movements because of diversion. Proceed to the analysis process.
5. Check the results for reasonableness. If pass-by trips diverted from a thoroughfare represent more than 15% of the traffic volume on the street, they should be re-evaluated.

REDEVELOPMENT PROJECTS 5-1.703

Since the purpose of the impact study is to evaluate a development proposal's impact on the transportation system, redevelopment projects require some special analysis. In the case of redevelopment projects, existing site-generated trips should be subtracted from existing and horizon year off-site traffic. The traffic generated by the proposed development is then added to the adjusted off-site traffic according to the above procedures to determine the impacts on the transportation system.

The consultant will establish the existing site generated trips through the collection of driveway counts. If the redevelopment area is substantial, or for some other reason does not lend itself to the collection of driveway counts for this purpose, trip generation rates may be applied to establish the existing site generated trips.

ANALYSIS 5-1.800

This section describes the analytical techniques used to derive the study findings, conclusion, and recommendations. As new methodologies are developed and validated, they may be considered by the city or the consultant for applicability to the study requirements.

Capacity analysis must be performed at each of the major street and site access intersection locations (signalized and unsignalized), as well as transportation links, located within the study area. In some cases, there may be a need to analyze additional critical intersections or segments located outside the basic study area.

In addition to capacity analysis, several other transportation service-related factors shall be considered, including:

- Safety
- Circulation patterns
- Traffic control needs
- Transit needs or impacts
- Transportation system management
- Neighborhood impacts
- On-site parking adequacy and off-site parking facilities, if any are to be used for site generated parking
- Pedestrian and bicycle circulation
- Service and delivery vehicle access and circulation

5-1.801 TOTAL TRAFFIC ESTIMATE

For each analysis period being studied, a projected total traffic volume must be estimated for each segment of the roadway system being analyzed. These projected total traffic volumes (consisting of site and non-site traffic) will be used in the capacity analyses. The traffic impact report must clearly depict the total traffic estimate and its components. Projected daily traffic volumes must be determined for all major streets within the study area as well.

5-1.802 GUIDELINES

Once the total traffic volume estimate has been established, capacity analyses will be performed. In some cases, the projected demand may be unrealistically higher than the capacity available on the existing or proposed transportation system components. In those cases where improvements are not feasible, an adjustment may be necessary in the site and/or background traffic to reflect realistic traffic diversion caused by capacity restraint. In such cases, the traffic components on all adjusted segments must be added again to obtain a more realistic total traffic projection. The original traffic estimates and specific reference to trip diversion shall be included in the report.

5-1.803 IDENTIFICATION OF IMPACTS, NEEDS, & COMMON DEFICIENCIES

The analysis is intended to show the relationship between operations and geometry and to assess deficiencies, as well as to identify alternatives for further consideration. This requires the identification of impacts, needs, and deficiencies.

The analysis of internal circulation, parking, off-site circulation, and capacity analyses will provide the basis for identifying transportation deficiencies and needs related to the proposed development. The analyses shall be conducted for conditions both with and without the proposed project in order to establish the incremental impacts of the project and the incremental needs it generates.

5-1.804 LEVEL OF SERVICE AND CAPACITY ANALYSIS

The evaluation of traffic operating conditions is referred to as level of service (LOS). The assessment of LOS is based on the quantitative effect of factors such as speed and volume of traffic, geometric features of the roadway or intersection, traffic interruptions and delay, and freedom to maneuver.

A. Signalized Intersections

Signalized intersection level of service will be determined utilizing the methods contained in the Highway Capacity Manual (HCM), 2000 or most recent edition. Two methods (operational and planning) are provided for the analysis of signalized.

The operational analysis requires detailed information on all prevailing traffic, roadway, and signalization characteristics. It provides for a full analysis of capacity and level of service and can be used to evaluate alternative traffic demands, geometric designs, signal plans, or all three. Because of the detailed data requirements, the operational analysis should be used only for the evaluation of existing conditions or for the analysis of projects with a horizon year of less than 5 years in the future. When critical variables are missing, it may be necessary to conduct a planning analysis. However, default values may be used for some of the variables without seriously compromising computations. Caution should nonetheless be used when applying such values and it must be used. The input data needs, with values that have been determined to be most appropriate for Scottsdale, are listed in Figure 5.1-1.

TYPE OF CONDITION	PARAMETER	SYMBOL	DEFAULT
Geometric conditions	**Area Type**	**CBD, Other**	**No default**
	Number of Lanes	N	No default
	Average Lane Width, ft.	W	No default
	Grade, %	%G	0%
	Existence of Exclusive LT or RT lanes	None	No default
	Length of Storage Bay, LT or RT Lane	L_s	No default
	Parking Conditions	Yes, No	No parking
Traffic conditions	Volumes by Movement, vph	V	No default
	Ideal Saturation Flow Rate by Mov't, pcphgpl	S_o	2,000 pcphgpl (through lanes)
			1,800 pcphgpl (turn lanes)
	Peak Hour Factor	PHF	0.9
	Percent Heavy Vehicles	%HV	2%
	Conflicting Pedestrian Flow Rate, peds/hr	PEDS	None: 0 peds/hr
			Low: 50 peds/hr
			Mod: 200 peds/hr
			High: 400 peds/hr
	Local Buses Stopping in Intersection	NB	0/hr
	Parking Activity, pkg maneuvers/hr	N_m	20/hr (pkg exists)
	Arrival Type (1-6)	AT	3 if isolated
			4 if coordinated
	Proportion of Vehicles Arriving on Green	P	
Signalization conditions	Cycle length, sec	C	60-120 seconds
	Green Time, sec	G	No default
	Yellow Change Interval	Y	3.0 seconds
	All-Red Clearance Interval	AR	1.0 second
	Actuated or Pre-timed Operation	A or P	Pre-timed
	Pedestrian Push-Button?	Yes, No	Yes
	Minimum Pedestrian Green	G_p	No default
	Phase Plan	None	No default

FIGURE 5.1-1. LEVEL OF SERVICE DEFAULT DATA

One of the most critical traffic characteristics that must be quantified to complete an operational analysis is the quality of the progression. The arrival type is best observed in the field but could be approximated by examining time-space diagrams for the street in question. The arrival type should be determined as accurately as possible because it will have a significant impact on delay estimates and LOS determination.

The planning analysis only addresses capacity because it is not necessary or practical to perform detailed calculations of delay, given the accuracy of the data that are generally available for planning purposes. The planning method generates two important products:

(a) a projection of the status of the intersection with respect to its capacity, and (b) an approximation of a signal timing plan. Combining this approximation with appropriate values for other parameters used in the operational analysis, it is possible to extend the planning analysis into the level of the operational analysis.

The data requirements for the planning method are much less rigorous. Still, it is necessary to answer the following three questions in order to perform the analysis:

1. Will parking be allowed?
2. Will the signal be coordinated with the upstream signal on this approach?
3. How will left turns be accommodated?

If the answers are not known to any of these questions, then the analysis should be completed and compared for each alternate condition, and a recommendation made as to the most desirable design conditions.

B. Unsignalized Intersections

Unsignalized intersection level of service will be determined utilizing the methods contained in the Highway Capacity Manual (HCM), Third Edition. Procedures have been developed to analyze both two-way, stop controlled intersections and all-way, stop controlled intersections. Each of these analysis methods is further divided into analysis of four-way intersections and T-intersections.

C. Arterials

In most cases, the capacity of an arterial street is dictated by the signalized intersections operating along its length. The analysis procedures described in the HCM, therefore, rely on the results of the analysis methods above as a part of the input. Planning applications may use the entire arterial methodology, in a straightforward but somewhat simplified way, by computing stopped delay using certain default values as outlined in the signalized intersection analysis section. A reasonable estimation of the intended signal timing and quality of progression is vital to this process.

D. Capacity Analysis Software

Software that accurately replicates the HCM computations may be used in lieu of manual computations. Assumptions should be verified, as well as checking default values. The consultant must verify that the city has access to the software that is intended to be used, so that city staff may properly verify inputs and results.

5-1.805 SAFETY

A. Vehicles

The initial review of existing data within the study area shall include the accident experience for the past three years. This review should identify locations where roadways serving the site must be analyzed, and measures to alleviate accident hazards must be considered. Accident rates vary, but any intersection with more than one accident per million entering vehicles is worthy of additional analysis. Accident records can be obtained from the Transportation Department.

B. Pedestrians and Bicycles

The site plan should be reviewed to ensure that the internal circulation system and external access points are designed for pedestrian safety and to minimize vehicle/pedestrian conflicts. Locations for transit stops and their associated pedestrian flows to building access points require thorough assessment to ensure safety. Similarly, pedestrian flows to and from parking facilities need careful consideration during site planning, which often requires detailed information on the project's use and layout.

These considerations should also be addressed for projects expected to generate significant bicycle traffic.

FORMULATION OF MITIGATION ALTERNATIVES 5-1.806

When the analyses indicate that a particular location is projected to operate at an acceptable level of service, no improvements are required. If, however, deficiencies are recognized, then improvements in access, geometry, or operations must be investigated. When reasonable improvements cannot sufficiently accommodate projected traffic, more detailed assessments of project size, land use, or development phasing may be required.

Many major projects necessitate improvements to the area's roadway infrastructure, both internally and externally. The nature of these improvements and their timing must be related to the anticipated phasing of the development, as well as the changes within the study area as a whole.

For redevelopment projects, mitigation alternatives will include transportation demand management measures, including, but not limited to transit, bicycle, and pedestrian improvements.

SITE ACCESS & OFF-SITE IMPROVEMENTS 5-1.900

To develop recommendations for site access and off-site roadway improvements requires that judgments be applied to a number of alternative solutions or recommendations.

ESTABLISHMENT OF GOALS 5-1.901

Study recommendations and conclusions are intended to provide safe and efficient movement of traffic to and from, within and past, the proposed development, while minimizing the impact to non-site trips.

The following levels of service are required to be provided after the completion of each phase of the development, as well as completion of the entire project:

1. All intersections and arterials must operate at LOS D (or better) during the peak traffic hour of the roadway system. All intersection approaches, and intersection turning movements should operate at LOS D (or better) and must operate at LOS E (or better) during the peak traffic hour of the roadway system. When the planning analysis is performed, the requirement will be that all intersections operate at "near capacity" or "under capacity."
2. In areas where current levels of service, or future levels of service without the development, are E or worse, the delay or v/c ratio may not be significantly increased by the development traffic.

RECOMMENDATIONS 5-1.902

During the final phase of the study, all analyses are reviewed and reassessed to best respond to the actual transportation needs of the project and the adjacent area. Results must be placed in logical perspective and sequence.

In high-growth areas, particularly when large developments are being analyzed, it is important to determine the impact of individual phases of the development. This procedure becomes necessary in situations requiring assessments to fund improvements. In such cases, the following analyses should be completed:

1. Levels of service under existing conditions.
2. Levels of service for future horizon dates, with anticipated non-site generated traffic growth. Committed improvements should be included for each horizon year in the analyses. Additional improvements necessary to attain LOS D for base conditions should be identified.

3. Levels of service including site generated traffic for horizon years, both with and without proposed additional improvements to local and regional roadways beyond those identified in step 2.

A. Network Improvements

Network improvements recognize that individual developments and increasing traffic volumes are part of the long-term growth of an area. Roadway improvements associated strictly with any given development may not necessarily address the long-term needs of the rest of the region on a systematic basis, and thus not address overall transportation system needs. Therefore, a section of the traffic impact study will address compatibility with the existing and planned infrastructure.

B. Localized Improvements

Localized improvements consist of modification, expansion, and in some cases addition of roadway facilities in the immediate vicinity of the proposed development. The scope of these improvements will be consistent with the LOS criteria established above. They will address specific site and through traffic needs, and will be compatible with the city's long-term improvement plans.

C. Program Improvements

If adequate transportation improvements cannot be reasonably recommended, consideration should be given to reducing trip generation during problem periods by reducing the project magnitude or altering the land use mix.

5-1.903 IMPLEMENTATION SCHEDULE

It is important to view recommendations for improvements within appropriate time perspectives. Recommendations should be sensitive to the following issues:

1. Timing of short-term and long-term network improvements that are already planned, scheduled, and/or funded.
2. Time schedules of adjacent developments.
3. Size and timing of individual phases of development.
4. Right-of-way needs and availability of additional rights-of-way within appropriate time frames.
5. City priorities for transportation improvements and funding.
6. Cost-effectiveness of implementing improvements at a given stage of development.
7. Necessary lead-time for additional design and construction.

5-1.1000 ON-SITE CIRCULATION

An integral part of an overall traffic impact study relates to basic site planning principles. It is extremely important that off-site roadway improvements be fully integrated with on-site recommendations.

5-1.1001 APPROACH TO SITE PLANNING

Internal design will have a direct affect on the adequacy of site access points. The identification of access points between the site and the external roadway system, and subsequent recommendations concerning the design of those access points, is directly related to both the directional distribution of site traffic and the internal circulation system configuration. It is clear that driveway traffic volumes of varying sizes need to be accommodated on the site in terms of both providing sufficient capacity and queuing space, and of distributing automobiles to and from parking spaces, pick-up/drop-off points, and drive-through lanes. An integrated system should deliver vehicles from the external roadway system in a manner that is easily understood by drivers, that maximizes efficiency, accommodates anticipated traffic patterns, and ensures public safety. Pedestrian linkages

should conveniently and safely connect transit stops and parking facilities with building entrances. Similar linkages should be provided between buildings.

It must be understood that simply providing access to a site by means of curb cuts does not necessarily mean that access to the development has been adequately addressed. The quality of access as it relates to the internal site circulation and design will have a direct relationship on the quality of traffic flow in and around the site development, as well as a direct impact on public safety.

ON-SITE PLANNING PRINCIPLES 5-1.1002

A. Access Points

Requirements for access to the public street system are detailed in Section 2-1.500 and Section 5-3.200. The guidelines should be followed as closely as possible. Exceptions will only be granted where there are demonstrable extenuating circumstances.

Joint access (the sharing of a driveway by two or more properties) is desirable, particularly where property frontages are short and driveway volumes will be low. Such driveways should be located on joint property lines or be accessible via cross-access easements on the private property being served by the joint driveway.

B. Vehicular Queuing Storage

Adequate internal and external vehicle queuing storage is essential to providing safe and efficient access and circulation. Queuing analyses must be included to demonstrate the adequacy of the proposed storage lanes.

Drive-in and drive-through establishments should be provided with adequate queue storage capacity to accommodate normal peak queues. Since many of these businesses have major daily or seasonal variations in activity, peaking characteristics should be carefully evaluated.

C. Internal Vehicular Circulation

Internal circulation is the means by which vehicular traffic is delivered between entry points and parking areas, pick-up/drop-off points, and service areas. Internal circulation roadways should permit access between all areas. These roads should be designed to safely and efficiently deliver vehicles and pedestrians to their respective destinations.

D. Service and Delivery Vehicles

Service and delivery vehicles require separate criteria for movement to and from the site. Of particular interest is that adequate turning paths are provided for large service vehicles to allow entry and exit without encroaching upon opposing lanes or curbed areas. In addition, sufficient storage areas must be provided so that service vehicles do not hinder the use of parking and circulation routes for other visitors to the site.

E. Pedestrian, Transit, Bicycles, and Handicapped Facilities

The overall site plans should also consider public transportation, pedestrians, bicyclists and those with disabilities. Adequate facilities for parking bicycles should be included. Transit facilities, car pool parking, and shuttle bus staging areas should be provided as appropriate for the development. Where provided, these facilities should be located adjacent to service drive and entrance locations, at key locations along circulation drives, or at major pedestrian focal points along the external roadway system.

Pedestrian connections between these facilities and the site's buildings must be integrated into the overall project design, and provide maximum accessibility through the use of sidewalk ramps, etc. These connections must also be provided to the public sidewalk and path or trail systems surrounding the site. See Sections 5-6 Transit, 5-7 Bikeways, 5-8 Pedestrian Facilities, and 5-9 Neighborhood Traffic Management.

5-1.1100 TIMA REPORT

5-1.1101 PURPOSE AND END USES

The purpose of the impact and mitigation analysis is to identify and measure the effects of a proposed development on the surrounding transportation system, and determine appropriate measures necessary to mitigate those impacts. The developer will be able to utilize the report to evaluate their development proposal and site plan. The city will also utilize the report in reviewing the attributes of proposed developments in conjunction with requests for annexation, land subdivision, zoning changes, building permits, or other development reviews.

5-1.1102 PRESENTATION

The study report will include at a minimum:

1. Study purpose and objectives;
2. A description of the site and study area;
3. Existing conditions in the area of the development;
4. Anticipated nearby development;
5. Trip generation;
6. Trip distribution;
7. Modal split;
8. Traffic assignment resulting from the development;
9. Projected future traffic volumes;
10. An assessment of the change in roadway operating conditions resulting from the development traffic; and
11. Recommendations for site access and transportation improvements needed to maintain traffic flow to, from, within, and past the site at an acceptable and safe level of service.

If the assumptions made in the analysis are based on published sources, then those sources should be specifically referenced. If other, less readily available sources are used, a more detailed explanation must be provided and a copy of the relevant information provided in an appendix.

Please follow the sample report outline provided below and the instructions provided by the Transportation Department staff and/or the Project Coordination Manager when completing the analysis and report. Incomplete reports will be returned to the consultant for revisions or completion prior to a full review of the analysis.

5-1.1103 CERTIFICATION

A professional engineer registered in the State of Arizona must seal the report. If this certification is not provided, the report must be clearly stamped "DRAFT" or "PRELIMINARY."

5-1.1104 SAMPLE REPORT OUTLINE

The outline structure shown in Figure 5.1-2 provides a framework for the Transportation Impact and Mitigation Analysis report. Some studies will be easily documented using this outline; however, additional sections may be warranted because of specific issues to be addressed and/or the results of the study. Likewise, inapplicable sections listed in the outline may be omitted from the report.

TIMA REPORT OUTLINE

I. Introduction to Summary
- A. Purpose of Report and Study Objectives
- B. Executive Summary
  1. Site locations and study area
  2. Development description
  3. Principal findings
  4. Conclusions
  5. Recommendations

II. Proposed Development
- A. Off-site development
- B. Description of on-site development
  1. Lane use and intensity
  2. Location
  3. Site plan
  4. Zoning
  5. Phasing and timing

III. Area Conditions
- A. Study Area
  1. Area of influence
  2. Area of significant traffic impact
- B. Study Area Land Use
  1. Existing land uses
  2. Existing zoning
  3. Anticipated future development
- C. Site Accessibility
  1. Area roadway system
     - a) existing
     - b) future
  2. Traffic volumes and conditions
  3. Transit service
  4. Existing relevant transportation system management

IV. Projected Traffic
- A. Site traffic (each horizon year)
  1. Trip generation
  2. Trip distribution
  3. Modal split
  4. Trip assignment
- B. Through Traffic (each horizon year)
  1. Method of projection
  2. Non-site traffic for anticipated development in study area
     - a) Method of projections
     - b) Trip generation
     - c) Trip distribution
     - d) Modal split
     - e) Trip assignment
  3. Through traffic
  4. Estimated volumes
- C. Total Traffic (each horizon year)

V. Traffic Analysis
- A. Site Access
- B. Capacity and Level of Service
- C. Traffic Safety
- D. Traffic Signals
- E. Site Circulation and Parking

VI. Improvement Analysis
- A. Improvements to accommodate base traffic
- B. Additional improvements to accommodate site traffic
- C. Alternative improvements
- D. Status of improvements already funded, programmed, or planned
- E. Evaluation

VII. Findings
- A. Site accessibility
- B. Traffic impacts
- C. Need for improvements
- D. Compliance with applicable city of Scottsdale codes

VIII. Recommendations
- A. Site access/circulation plan
- B. Roadway improvements
  1. On-site
  2. Off-site
  3. Phasing
- C. Transportation System Management Actions
  1. On-site
  2. On-site operational
  3. Off-site
- D. Other

Conclusions

FIGURE 5.1-2. TIMA REPORT OUTLINE

transportation

RIGHT-OF-WAY MANAGEMENT

5-2

This section specifies the requirements for securing an encroachment permit for encroaching in the City of Scottsdale's public rights-of-way (ROW) and public utility easements. It outlines responsibilities and requirements for permits, utility construction plans, construction considerations, and as-builts.

Transportation
7447 E Indian School Road
Suite 205
480-312-7696

One Stop Shop
7447 E Indian School Road
Suite 100
480-312-2500

Plan Review
7447 E Indian School Road
Suite 105
480-312-7080

Inspection Services
9191 E San Salvador
Second Floor
480-312-5750

contents

Sections

5-2.000 General Information
5-2.100 Permits
5-2.200 Utility Construction Plans
5-2.300 Construction Requirements
5-2.400 As-Builts

Figures

5.2-1 Map of Primary and Secondary Roads
5.2-2 Work Zone Project Signage

transportation

RIGHTS-OF-WAY MANAGEMENT

5-2

GENERAL INFORMATION 5-2.000

PERMIT REQUIREMENTS 5-2.001

Scottsdale requires an encroachment permit according to Chapter 47 of the Scottsdale City Code (www.scottsdaleaz.gov/codes/).

The city administers all planning, permitting, and construction processes in accordance with the following documents:

- **Maricopa Association of Governments (MAG) Uniform Standard Specifications** www.mag.maricopa.gov/
- **City of Scottsdale Supplement to the MAG Uniform Standard Specifications** www.scottsdaleaz.gov/design/COSMAGSupp/
- **Arizona Utility Coordinating Committee (AUCC) Public Improvement Project Guide**, including the Joint Trench Use Model and Western Underground Trench Formula www.ci.phoenix.az.us/AGENCY/PHXEASD/cpage.html
- **City of Phoenix Barricade Manual** and the **Manual on Uniform Traffic Control Devices** www.mutcd.fhwa.dot.gov/

PURPOSE OF A PERMIT 5-2.002

Permits are necessary to assure that all work done in the rights-of-way (ROW) is:

1. Completed in the proper location with adequate spacing;
2. Built with acceptable materials and in accordance with current specifications;
3. Installed in a safe and expeditious manner.

And that:

1. Final completion is assured and acceptable;
2. All infrastructure is protected;
3. Unnecessary traffic delays or congestion to the traveling public is limited;
4. All landscaping is restored; and
5. Liability issues are properly addressed.

Engineered construction drawings (plans) must be submitted for review. The objective is to make optimal utilization of the space available in the public ROW and public utility easements; assure compliance with all city ordinances, policies, and standards; assure coordination with other ROW users, agencies, and city project activities; and reduce risk and/or inconvenience to the traveling public. After the application is submitted, the city may add special conditions or stipulations to the permit, which are important for the applicant to review for compliance.

Permits are reviewed in scope by the city and these permits do not relieve a permittee from any of the stated standards in the Permit Requirement section above, and/or any federal, state, city, or industry accepted practice. It is the permittee's responsibility to insure compliance with all of the above stated requirements. Plans that have been reviewed by the city do not relieve a permittee of this requirement unless the deviation from these standards is clearly specified on the plans and permit, and the permittee has received; beyond the standard city permit approval, an additional, written approval from the city. This additional approval does not waive any other stated requirements on the plans or stipulations to the plans.

5-2.003 LICENSE AND OTHER REQUIREMENTS

A. Telecommunications Facilities (Pending Telecom Ordinance)

All telecommunications providers who desire to construct, install, operate, or maintain telecommunications facilities in the public highways must first obtain a Telecommunications License from the city of Scottsdale as stated in Chapter 47, Article VI of the Scottsdale City Code, except in cases where state law forbids establishment of a license requirement. Licensing information is available by calling the Telecommunications Policy Coordinator at 480-312-4138.

B. Cable TV

All cable television and telecommunications providers who provide cable television services, programs, or signals must obtain a Cable TV License from the city of Scottsdale as stated in Chapter 7 of the Scottsdale City Code. Licensing information is available by calling the Telecommunications Policy Coordinator at 480-312-4138.

C. Wireless Communications

All providers who provide wireless communications infrastructure must file a pre-application with the city's Planning & Development Services Department to determine the approval process prior to obtaining a ROW encroachment permit. Also see www.scotttsdaleaz.gov/dspm/checklists for a wireless communications facilities application.

For more call 480-312-2500 or go to www.scottsdaleaz.gov/bldgresources/devprocess/.

D. All Other Aboveground Improvements

Installation of any aboveground improvements requires a pre-application, filed with the city's Planning & Development Services Department, to determine the approval process prior to obtaining a ROW encroachment permit.

For more call 480-312-2500 or go to www.scottsdaleaz.gov/bldgresources/devprocess/.

5-2.100 PERMITS

The ROW encroachment permit application is submitted to the One Stop Shop. Encroachment permit applications for public and private utility work will be submitted to the Inspection Services and Land Survey office at 9191 E. San Salvador. Include with the application a minimum of 3 sets of construction drawings, details, notes, traffic control plan, barricade plan, project schedule, insurance certificates, plating plan, a communication plan, and any other necessary information. In reference to projects proposed on Primary Roads, it is strongly encouraged that a provider submit project plans and the Traffic Control Plan as far in advance of the project as is reasonably possible, prior to application for an encroachment permit. However, the plans, Traffic Control Plan, and a permit application may be submitted simultaneously.

Upon receiving the application and appropriate drawings, details, notes, etc., city staff will log the request into the city's automated permit system and route the documents for technical review. This review includes, but is not limited to, checking for compliance with

construction standards, approving alignments, verifying that the work is in the public rights-of-way or public utility easement, determining if other work is occurring at the same time or at the same site, verifying that all joint trench opportunities have been incorporated into the design, checking for conflicts, reviewing traffic impacts, reviewing the barricade plan, and verifying that all city requirements have been met and incorporated into the plans.

Upon completion of the review, the permit application will be either issued to the applicant or returned for further modifications. Permits are issued a specified timeframe based on the estimated length of the project construction. If additions or corrections are required to the plans or permit application, the applicant will be notified and asked to make corrections and resubmit to the city.

PERMIT TYPES 5-2.101

A. General ROW Encroachment Permit

A permit is required for all encroachment in, on, above, over, under, or through the city's rights-of-way, including all public utility easements. The Rights-of-Way Encroachment Permit application forms are available at the city of Scottsdale's One Stop Shop. The General ROW Permit Application must be submitted to the One Stop Shop.

B. Public and Private Utility Permit

A permit is required for all utility work, public and private, that occurs within the city's ROW or within public utility easements. A Utility Company Right of Way Permit Application is available at the city of Scottsdale's One Stop Shop or the Inspections and Survey Services office (online at www.scottsdaleaz.gov/design/dspm/forms). The Public and Private Utility Permit Application must be submitted to the Inspections and Survey Services office.

C. Emergency Encroachment Permit

For emergency repairs involving loss of service, call Inspection Services at 480-312-5750 to state the type of emergency, the location, the number of lanes closed, a contact name, estimated time to complete the repairs, and a cell phone number. In addition, fax the barricade plan to Inspection Services at 480-312-5704 within 24 hours. Note: The installation of new service is not an emergency. The appropriate construction project signage needs to be posted by the permittee as outlined in Section 5-2.307.

This permit is available online at www.eservices.scottsdaleaz.gov/planreview/

D. Annual Maintenance Encroachment Permit

A permittee who owns an improvement in the city's ROW or subcontractor may apply for an annual maintenance encroachment permit at the One Stop Shop. The annual maintenance encroachment permit must be renewed every year; permitted activities include entering manholes, cabinets, or other above/below ground improvements but do not include any pavement or concrete cutting. The maintenance encroachment permit number must be shown on the insurance certificate.

PERMIT FEES 5-2.102

Fees for all permits will be charged per city policy. Permittees must demonstrate proof of insurance as required in Section 5-2.104. Permit fees and other construction costs are collected in accordance with the fee schedule in Chapter 47 of the Scottsdale City Code (except as superceded by a franchise or license agreement) when each permit is issued. On joint trench projects, the surcharge fee will be apportioned to the participating utilities. Refer to www.scottsdaleaz.gov/bldgresources/fees.

PERMIT DURATION 5-2.103

The permit application needs to identify the anticipated length of construction (start and stop dates) in calendar days. The city may require additional construction scheduling information on a case-by-case basis. The actual construction start date is subject to city

approval. The permit is activated by calling Inspection Services at 480-312-5750 a minimum of 72 hours prior to the start of construction, and obtaining city approval of a barricade plan (if needed) prior to commencing work.
In the event a permittee has not begun construction within the approved timeframe, then the project may be subject to additional planning and coordination efforts. If the permittee does not expeditiously complete construction in the approved timeframe, then enforcement action may be taken. Failure to expeditiously complete the project within the permitted timeframe may result in denial of future permits until the project is completed to the city's satisfaction.

5-2.104 INSURANCE REQUIREMENTS

Before the city will issue any permits, the contractor must provide a Certificate of Insurance with agreed to limits of liability, and which lists the city as additionally insured.

A. Permittee Liability

The permittee is responsible for all liability imposed by law for damages arising out of or related to work performance or failure by the permittee, permittee's agents, contractors, and all tiers of subcontractors under the permit. If any liability claim is made against the city, its officers or employees, the permittee will defend, indemnify and hold the city harmless from any such claim.

B. Insurance Limits

1. No applicant is entitled to an encroachment permit unless s/he has filed, and maintain on file with the city, a current Certificate of Insurance certifying that the permittee carries public liability and property damage insurance issued by an insurance carrier authorized to do business in the state. This insures the applicant and the city and its agents against loss by reason of injuries to, or death of persons, or damages to property arising out of or related to work performed by the applicant, its agents or employees while performing any work under the permit. Such insurance is primary and provides coverage for liability assumed by the applicant under subsection (a) of this section, and needs to be provided by the permittee in the following minimum amounts:
2. General Liability Insurance -- $1,000,000 each occurrence, $2,000,000 Products and Completed Operations Aggregate and $2,000,000 General Aggregate.
3. Vehicle Liability Insurance -- $1,000,000 Combined Single Limit
4. Worker's Compensation Insurance -- As required by Arizona law
5. The city Risk Management Director may set higher or lower limits of liability insurance depending on risk exposures.

C. Effective Timeframe of Insurance

Failure by the applicant to provide the city with the required insurance certificate, and failure by the city to demand the filing by permittee of such a certificate before such a permit is issued, does not waive the permittee's obligation to provide the insurance.

The required insurance certificate must remain in effect and be kept on file with the city until all work to be performed by the permittee (under the permit) has been completed. Where an encroachment involves a permanent obstruction, the required insurance certificate requirements remain in effect until the construction is removed.

The insurance certificate provides that coverage cannot expire or be canceled without providing the city 10 days written notice of such action.

5-2.105 TRAFFIC CONTROL PLAN

The purpose of a Traffic Control Plan is to proactively plan for, coordinate, and minimize the impacts of encroachment and construction in the ROW. The Traffic Control Plan is designed to help the city of Scottsdale understand what traffic impacts will occur during a

construction project. The Traffic Control Plan is intended to identify the phasing of large projects, including lane restrictions, closures, plating, or any restriction that could delay the traveling public.

1. A Traffic Control Plan needs to be submitted prior to (with plans) or accompanied by the permit application for all proposed work in or on Primary Roads (see Figure 5.2-1). The Traffic Control Plan is subject to all city review processes and will be reviewed and approved by the city prior to permit issuance. Additional information and stipulations may be required on a case-by-case basis. The required Traffic Control Plan is in addition to the submission of a Barricade Plan prior to the start of construction (see Section 5-2.306).

2. The Traffic Control Plan will:
   a. Provide the estimated start date, preferably within 15 days of actual construction.
   b. Provide the duration of construction.
   c. Provide hours that traffic restrictions will be in place (24 hr., off-peak mid-day, off-peak night, etc.).
   d. Identify the length of the project and location details, including lane closures and type of work.
   e. Describe any construction phasing that will occur during the project, specifically how the barricading configuration will change during the duration of the project, and how it will be accomplished in the project schedule.
   f. Provide a map of the affected area of construction, showing existing lane striping, proposed work zone, existing speed limit, and detail all driveway, alleys, transit facilities, median breaks or other locations where traffic may enter/exit or be in conflict with the project work zone.
   g. Provide all above information on no less than 11-by 17-inch paper.

UTILITY CONSTRUCTION PLAN 5-2.200

All Utility and Telecommunications Construction Plans must comply with Sections 1-2 and 9-1. Additional plan details may be required on a case-by-case basis.

CONSTRUCTION REQUIREMENTS 5-2.300

WORK HOURS IN THE RIGHTS-OF-WAYS 5-2.301

Generally, no interference with traffic flow on Primary Roads (see Figure 5.2-1) is permitted during the hours of 7 to 9 a.m. or from 4 to 6 p.m. unless prior authorization is obtained in writing by the Traffic Engineering Director or designee. Specific work hours may be stipulated by the city on the project's Barricade Plan. Night work must have prior authorization from the city and may be required by the Traffic Engineering Director or designee. In addition, certain areas of the city may have seasonal or special event restrictions for construction work, as designated by the city on a case-by-case basis. Contact the Traffic Engineering Division at 480-312-7696 for updated seasonal or special event restrictions.

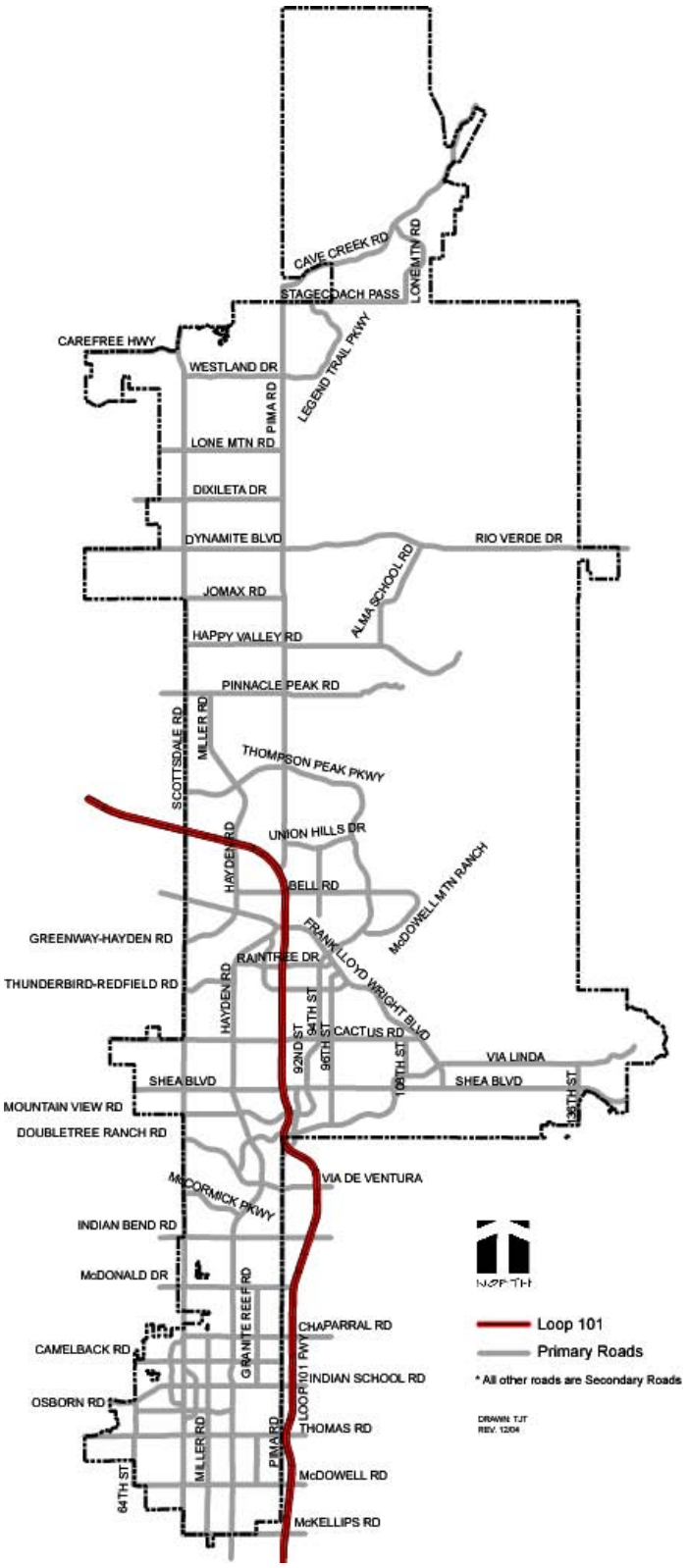

FIGURE 5.2-1. PRIMARY ROADS

JOINT TRENCHING POLICY

5-2.302

Work in the rights-of-way has significantly increased over the past several years causing disruption to the traveling public, continual pavement cuts often in the same location, and conflict with other facilities within the rights-of-way. For these reasons, the city has increased its management of work in the rights-of-way, enacting a joint trench process for projects being done on Primary Roads. This policy is designed to:

1. Minimize the public's inconvenience with minimal lane closures;
2. Decrease multiple pavement cuts that detract from the life of the street;
3. Allow for proper space allocation within a limited rights-of-way area;
4. Aesthetically address multiple users needs with properly placed facilities/manholes/cabinets/etc.

A. Criteria

The city of Scottsdale requires a permittee to joint trench a project if the project is located on a Primary Road and the trench is 1,000 feet or longer. Joint trenching may also be required by the city on a case-by-case basis when a permittee's trench is 1,000 feet or less or on a Secondary road. The requirement for joint trenching on a Primary or Secondary Road is defined to include the entire ROW, not just curb to curb.

All requests for an exception to the joint trench requirement for any project must be submitted in writing to the city, and will be reviewed and approved by city staff on a case by case basis.

B. Procedure

1. Preliminary planning and design should be done by the permittee in accordance with the Arizona Utility Coordinating Committee's Joint Trench Use Model. (See www.ci.phoenix.az.us/AGENCY/PHXEASD/cpage.html for Figure 3.7-4A and 4B AUCC Project Models, and Figure 3.7-5 AUCC Joint Trench Use Notification Form).
2. The permittee must contact potential joint trench participants, as listed on file with the city of Scottsdale. Call 480-312-4138 to obtain a current participant list.
3. The permittee, as the lead provider, must send a notice to each potential participant (either by fax, email, or U.S. mail), of the joint trench opportunity and provide proof of notice to the city.
4. The permittee must also post a joint trench opportunity notice on the city's web site. See www.ci.phoenix.az.us/AGENCY/PHXEASD/cpage.html for the AUCC Joint Trench Notification Form.
5. If participation is requested by another provider, then the permittee must give a minimum two weeks timeframe for interested companies to supply the permittee with their needs so they can be included in the permittee's working drawing.
6. As part of the project plan set, the permittee must provide a trench cross-section and a plan that depicts the details of the proposed work, including the trench, manholes, driveways, utility cabinets/facilities locations and other appurtenances. The plan must show that all location conflicts have been resolved.
7. The permittee then submits three copies of the plan set, along with a permit application and a Traffic Control Plan to the city's One Stop Shop for staff review and approval.
8. Upon city approval of the plan, the permittee obtains the permits and schedules an on-site pre-construction meeting with the city's utility inspector to review the proposed work, timing of work, and any approved barricade plans prior to commencing any work. This is critical to ensure the positive progress of work being done in ROW.

C. Participants

Participants in the joint trenching include public utility and telecommunication providers (both current and future licensees).

D. Failure to Participate

Permits involving asphalt cuts and joint trench locations will only be issued once during a 2 – 4 year timeframe in any given location. Providers need to plan accordingly. Under extreme circumstances, the city may, at its sole discretion, waive the stated timeframe requirements. A franchise agreement or license is required to use the rights-of-way. Companies not possessing a license must do so by contacting the city's Telecommunications Policy Coordinator at 480-312-4138.

5-2.303 POTHOLING (VACUUM EXCAVATION)

A permit is required for all utility location work. All potholing will be done in accordance with Scottsdale's Supplemental Standard Specifications and Supplemental Standard Details to the MAG Uniform Standard Specifications, Details 2200 and 2201, located on the city's web site at: www.scottsdaleaz.gov/design/COSMAGSupp/.

5-2.304 STREET BORING REQUIREMENTS

All utilities or other facilities crossing existing city streets, regardless of the age of the street, must be bored or punched unless permission to open cut has been given in writing by the city Traffic Engineering Director or designee. The burden of proof will lie with the permittee to show that boring is not a feasible requirement. The permittee must specify the boring method on the construction plans, e.g. "directional boring." This requirement is used to assess appropriate boring methods. Certain types of boring, e.g. use of water jets are not allowed. The permittee must also indicate on the construction plans the anticipated impact on and restoration of existing facilities. The proposed method is approved by the city on a case-by-case basis during plan review. If field conditions are such that boring has been demonstrated to city Inspections to be infeasible, then the permittee may be permitted to open cut.

5-2.305 UNDERGROUNDING REQUIREMENT

All new public utility, cable TV, telecommunications fiber optic, cellular, dark fiber, or similar facility must be installed underground. If new facilities are proposed in an area that has existing overhead lines, the new facilities will be required to go underground and any permittees with existing overhead facilities may participate in reinstalling these facilities underground when a joint trench opportunity is provided. When major upgrades are planned, utility and telecommunications providers may underground existing facilities currently on existing poles.

Installation of new facilities or major enhancements to existing facilities need to be installed underground unless it can be demonstrated that the public's general health, safety, and welfare are affected by the underground installation, or that the provider lacks the ability to install the facilities underground. The fact that an underground installation is more costly than an overhead installation is not, in and of itself, a health or safety issue.

All above ground appurtenances need to be designed and installed with attention to minimizing the number of appurtenances, maximizing joint locations, combining with existing boxes, and sharing facilities. All locations will meet industry standards for sight distance locations, all industry safety requirements, and the aesthetic requirements of the city. The issuance of a permit in violation of any of the requirements will not void the permittee's responsibility, unless the substandard installation is clearly noticed and approved separately from the normal permit requirement.

BARRICADE PLAN 5-2.306

1. Barricade Plans must be submitted to Inspection Services a minimum of 72 hours (3 work days) prior to any proposed partial or complete street or alley closure by faxing the barricade plans to 480-312-5704.
2. The Inspection Services and Traffic Engineering divisions will review all barricade plans prior to barricade plan approval and commencement of work by the permittee. Work cannot be initiated on the portion of the project requiring street barricading until approval has been obtained in writing from both Inspection Services and Traffic Engineering divisions.
3. Work in/on residential streets typically does not need a separate Barricade Plan but all signs, barricades and other necessary traffic control devices need to located in accordance with the city of Phoenix Barricade Manual and the Manual on Uniform Traffic Control Devices (MUTCD). For more information, refer to www.mutcd.fhwa.dot.gov/
4. Design and implementation of the Barricade Plan needs to be performed by a well-trained and knowledgeable individual assigned the responsibility for traffic control devices at worksites. This individual must be American Traffic Safety Services Association (ATSSA) certified.
5. The Barricade Plan must include the identification and location of all barricades and signs, the hours of operation for the project, the construction duration and schedule, location of Variable Message Signs, bus stops, advisory signs for relocated bus stops, detour plans, relocated traffic control signs, and the project identification signs.
6. Construction project signage will be posted by the permittee as outlined in Section 5-2.307.
7. A copy of the approved Barricade Plan will be available at the jobsite at all times for the duration of the project.

CONSTRUCTION SIGNS 5-2.307

The permittee is required to post information signs at the work site identifying the name of the utility authorizing the work. The purpose of the sign is to identify the permittee authorizing the work and the contractor performing the work. This signage is still required even when marked company vehicles are present at the work site. Required sign information also includes a phone number where a person can call and receive information about the job and leave a message. The permittee must respond to all phone messages within 24 hours. In addition, all permittees must return regular traffic control signs back to their original place and replace any signs damaged during construction. General signage requirements are listed below. Specific project signage may be required by the city on a case by case basis.

A. Primary Roads

Projects on Primary Roads, as identified in Figure 5.2-1, that are either greater than 1 mile in length or have a construction timeframe of 30 calendar days or longer, must utilize the following signage (see Figure 5.2-2):

1. Variable Message Board (VMB) sign at each end of the project indicating:
   a. Location of construction, including cross streets names.
   b. Direction of travel restricted.
   c. Dates and duration.
   d. Alternate route suggested.
2. Stationary Signs at each end of the project indicating:
   a. Names of authorizing company and permittee.

b. Phone number for job information and as means to get a response to phone calls/message.
c. Estimated start and completion dates for project.
d. Project description.
e. Conform to the following format:
   - At least 4'x4' size sign, with a minimum of 4” to 6” letters (black legends/orange background) for roads posted up to 40 mph.
   - At least 6'x6' size sign, with minimum 6" to 8" letters (black legends/orange background) for roads posted over 40 mph.
   - Type style is to be block, sans serif, medium width stroke, no more than 50% condensed, and not extra bold, not italics letters for better readability (For example: Helvetica medium).
   - Sign should have an inset border with rounded corners.

FIGURE 5.2-2. WORK ZONE PROJECT SIGNAGE

B. Other Primary and All Secondary Roads

All projects not meeting the criteria listed above in Section 5-2.307 paragraph A must post stationary signs at each end of the project that indicate the following:

1. Names of authorizing company and permittee.
2. Phone number for job information and to leave a message.
3. Estimated start and completion dates for project.
4. Project description.
5. Conform to the following format:
   a. At least 4'x4' size sign, with a minimum of 4” to 6” letters (black legends/orange background) for roads posted up to 40 mph.
   b. At least 6'x6' size sign, with minimum 6" to 8" letters (black legends/orange background) for roads posted over 40 mph.
   c. Typestyle is to be Block style, sans-serif, medium width stroke, no more than 50% condensed, and not extra bold, not italics letters for better readability (For example: Helvetica medium typestyle).
   d. Sign should have an inset border with rounded corners.

5-2.308 COMMUNITY NOTIFICATION

In addition to the above signage requirements, community notification will be required where there will be significant traffic, ingress/egress, construction, or noise impacts on a particular area. Community notification may take different forms depending upon the particular permitted project or work. Some possible methods of notification could include: additional signage, door hangers, community newsletters, press releases, community

meetings, web site information, etc. The city reserves the sole right to determine the appropriate community notification requirements for all permitted projects on a case-by-case basis.

INSPECTIONS 5-2.309

All above ground and underground facilities and equipment placed in the ROW, and all construction work done in the ROW is subject to periodic and final inspection for compliance, with all permit requirements, as well as all applicable city, state, and federal laws. Permittee must notify Inspection Services at 480-391-5750 at least 72 hours prior to beginning permitted construction work in the ROW. Requests for city inspections must be made 24 hours in advance of required inspections.

PAVEMENT CUTS 5-2.310

As outlined in Chapter 47 of the Scottsdale City Code (www.scottsdaleaz.gov/codes), no excavation is permitted in newly paved, resurfaced, or sealed public streets for the following time frames:

- Construction or reconstruction of a structural section: 4 years.
- Surfacing, resurfacing, or sealing of an existing structural section: 2 years.

In the event of emergency, these periods may be waived by the city.

STRIPING/MARKINGS REQUIREMENTS 5-2.311

All striping and markings requirements, placement, and removal must comply with:

- **The Maricopa Association of Governments (MAG) Uniform Standard Specifications** (www.mag.maricopa.gov/) and
- **The Manual on Uniform Traffic Control Devices** (MUTCD) (www.mutcd.fhwa.dot.gov/).

TRANSIT FACILITIES/AMENITIES 5-2.312

If the project affects a bus stop, the permittee must create a temporary bus stop as close to the affected stop as possible and in a safe location. Permittee must also return all transit facilities and amenities to their original location and condition, or replace them if damaged during construction. If construction is going to be more than two weeks, a temporary bench is also needed at the temporary stop. Permittees must, as part of their traffic control plan, address how buses (which are generally 108" wide, plus mirrors) will maneuver through the site and whether a detour is necessary. In addition, the permittee needs to provide a minimum two- week notice to the city's transit office so that the city can provide information about detours, access, and projected construction timeframe. If the construction is an emergency, the city's transit office needs to be notified immediately 480-312-7696.

ABANDONED FACILITIES OR FACILITIES REMAINING AFTER EXPIRATION OF ENCROACHMENT PERMIT 5-2.313

If at any time a permittee wishes to cease using and abandon facilities within the ROW, or if the permittee has not applied for and received an extension or renewal of the original permit from the city before an encroachment permit has expired, the permittee must provide for the disposition of its facilities within the ROW as outlined below.

If a permittee desires to abandon its facilities within the ROW, they must submit an abandonment request to Inspection Services Utility Permit Coordinator. The abandonment request may designate one of three alternatives (as defined below). The city then approves the request by issuing an abandonment plan. In issuing an abandonment plan,

the city considers and attempts to accommodate the permittee's preference; however, the city retains the sole choice to designate one of the following three options:

1. Require the permittee to remove all structures, cable, equipment, or facilities; or
2. Permit the city to accept ownership, in which case, the title to such structures, cable, equipment, or other facilities vests in the city; or
3. Require the permittee to leave the facilities in place. If the facilities are abandoned in place, the permittee must record the facilities as "Abandoned in Place" and permanently maintain such records. Facilities that are Abandoned in Place will not need to be removed by the permittee. However, the permittee, by abandoning facilities in place, expressly permits the removal of such facilities by any future party at the sole discretion of the city.

If the abandonment plan requires the removal of facilities from the ROW, and the permittee fails to remove its structures, cable, equipment, or other facilities within 180 days of notification by the city, then the city will serve written notice of failure to comply. Furthermore, if the permittee fails to rectify the removal within 10 days from the date the notice was received, the city may rectify the default as outlined below:

Upon removal of the structures, cable, or other facilities, the city may submit in writing the cost incurred. Upon the permittee's receipt of notice of such amount, it shall immediately become a lien against the permittee's company, and shall remain a lien in favor of the city until the amount is paid in full, together with interest at the annual rate of 10 percent.

In the event no abandonment request is submitted to the city, the city has complete discretion to determine the disposition of all structures, cable, equipment, or other facilities left within the ROW. Any costs and expenses incurred immediately becomes a lien against the permittee's company, and will remain a lien in favor of the city until the amount is paid in full by the permittee, together with interest at the annual rate of 10 percent.

The right and remedy will not be exclusive, and the city has all the rights and remedies available to it in accordance with the laws of the State of Arizona and the city of Scottsdale. The establishment of a lien does not preclude the city from establishing additional liens upon subsequent failure or failures to remove any improvement.

Abandonment of any and all above ground facilities and appurtenances are also subject to all of the requirements stated above.

5-2.314 ALLEYS

If construction or work is planned in an alley, prior to commencing work, the permittee needs to contact Sanitation at 480-312- 5600 to obtain the days of sanitation pickup for that alley. Those days are to be listed on the plan along with a plan note that construction is prohibited on those days; exceptions may be made on a case-by-case basis by the Sanitation Director or designee. A Barricade Plan must be submitted to Inspection Services (where submitted, to whom/what location) at least 72 hours prior to commencing work for any work to be done in an alley.

5-2.400 AS-BUILTS

The city requires submittal of as-built plans for all facilities constructed or installed within public ROW or within easements that are owned by the city. The permittee who constructs facilities (not owned by the city) in the public ROW, or within easement, is required to maintain the facility as-builts and provide them to the city. The preferred as-built format is digital in either MicroStation or ArcView SHP format. The digital as-builts must conform to the Maricopa Association of Governments Computer Aided Drafting (CAD) standards (See Section 1-2.200), and must reference the city of Scottsdale encroachment permit number. It is preferred that digital as-builts utilize the city of Scottsdale's base maps (streets, right of way, parcels) as the foundation for the drawings.

transportation

GEOMETRICS

5-3

This section identifies the geometric requirements for each street classification within the city. It presents guidance for sight distance, access, sidewalks, partial street improvements, pavement transitions, subdivision streets, and Environmentally Sensitive Lands (ESL) street standards.

Transportation
7447 E Indian School Road
Suite 205
480-312-7696

One Stop Shop
7447 E Indian School Road
Suite 100
480-312-2500

Plan Review
7447 E Indian School Road
Suite 105
480-312-7080

contents

Sections

5-3.000	General Information
5-3.100	Design Standards
5-3.200	Street Access & Driveways
5-3.300	Sidewalks
5-3.400	Bridges, Retaining Walls, & Structural Clearances
5-3.500	Side Slopes
5-3.600	Partial Street Improvement
5-3.700	Construction of Half-Streets
5-3.800	Pavement Transitions
5-3.900	Frontage Roads
5-3.1000	Subdivision Street Planning
5-3.1100	Special Standards
5-3.1200	Environmentally Sensitive Lands Street Standards

Figures

5.3-1 to 3	Major Arterials
5.3-4 to 6	Minor Arterials
5.3-7	Couplet Streets
5.3-8 to 10	Major Collectors
5.3-11 to 14	Minor Collectors
5.3-15 to 17	Local Collectors
5.3-18 to 20	Local Residential
5.3-21	Local Commercial / Industrial
5.3-22	Median Grading
5.3-23	Cut-Off Walls
5.3-24	View Obstructions on Horizontal Curves
5.3-25	Vertical Curve Relationships
5.3-26	Intersection Sight Distance
5.3-27	Traffic Safety Triangle on Corner Property
5.3-28 & 29	Auxiliary Lanes
5.3-30 to 34	Median Opening for Intersections
5.3-35	Driveway Types
5.3-36 to 43	Driveway Grade Standards
5.3-44	Pavement Width Transitions
5.3-45	Subdivision Street Planning
5.3-46	Cul-de-Sac Street Length
5.3-47	Bubbles for Streets
5.3-48	Alley Widths and Intersection

GENERAL INFORMATION 5-3.000

USE OF NATIONAL STANDARDS 5-3.001

- Refer to the American Association of State Highway and Transportation Officials' (AASHTO) A Policy on Geometric Design of Highways and Streets, and AASHTO's Roadside Design Guide for clear zones, roadside obstacles, barriers, and curb use.
- All traffic control devices must comply with the Manual on Uniform Traffic Control Devices (MUTCD) prepared by the U.S. Department of Transportation, as well as Sections 5-4 and 5-5 of this document.
- Access control guidelines are contained in Section 3.103; refer also to the Access Management Manual published by the Transportation Research Board.

STREET TYPES 5-3.002

A. Freeways

Freeways will be designed to safely handle very large volumes of through traffic. Direct access will be limited to widely spaced interchanges. Design, construction, and operations will be provided by the Arizona Department of Transportation.

B. Arterial Streets

Arterial streets with raised medians provide regional continuity and carry large volumes of traffic between areas of the city and through the city. Full access to abutting commercial and multi-family land uses is limited to the greatest extent possible to facilitate movement of traffic. Pedestrian and bicycle crossings should be grade separated when feasible.

C. Collector Streets

Collector streets provide traffic movement between arterial and local streets, with some direct access to abutting commercial and multi-family land uses. Center left- turn lanes are provided to allow for greater access. Driveway access should be evenly spaced.

D. Local Streets

Local streets provide direct access to abutting land uses, provide access to the collector street system, and accommodate low traffic volumes. Local streets should be designed to discourage high travel speeds.

Deciding the location of local collector, residential, commercial and industrial streets are usually done during the development site planning process. Planning for local streets is influenced by the plans for adjacent developments that have recently been approved. The Plan Review Section will review each preliminary proposal for development and will specify any changes needed to conform to previously planned and approved street alignments. Plan Review will also specify the classification for each street involved in the plan.

STREET CLASSIFICATIONS 5-3.003

The six street classifications are based upon the type and level of use for which streets are intended; refer to the specified figures in Section 5-3.100 for design criteria. Special cross sections and design criteria apply for streets located within the Hillside or Upper

Desert/Lower Desert areas of the ESL; Figure 2.2-1 depicts the areas within the city where these criteria apply.

5-3.100 DESIGN STANDARDS

Appendices 5-3A and 5-3B list most of the design standards data necessary for the design of streets within the city of Scottsdale. Subsequent paragraphs in this booklet discuss these standards and provide other criteria that could not be included in the table.

5-3.101 MAJOR ARTERIALS

A. Rural Character

- Auxiliary turn lanes may be required at intersections with additional ROW requirements.
- Cross-sections may vary to fit surrounding topography.
- ADT: 35,000 - 55,000 vpd
- Design Speed: 55 - 65 mph
- Maximum Grade: 9.0%
- Minimum Grade: 0.4%

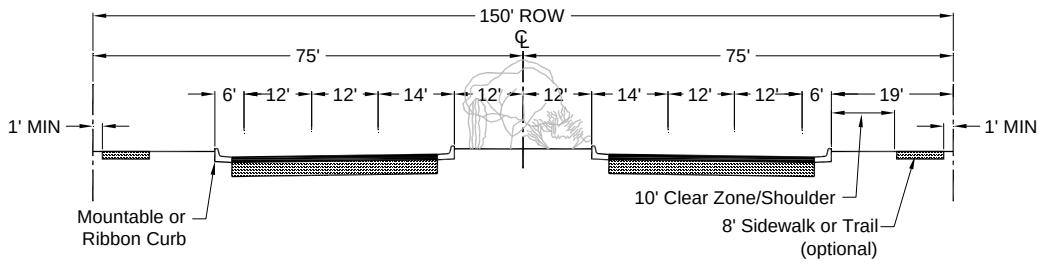

FIGURE 5.3-1. MAJOR ARTERIALS – RURAL CHARACTER

B. Suburban Character

- Auxiliary turn lanes may be required at intersections with additional ROW requirements.
- Cross-sections may vary to fit surrounding topography.
- ADT: 35,000 - 55,000 vpd
- Design Speed: 55 - 65 mph
- Maximum Grade: 9.0%
- Minimum Grade: 0.4%

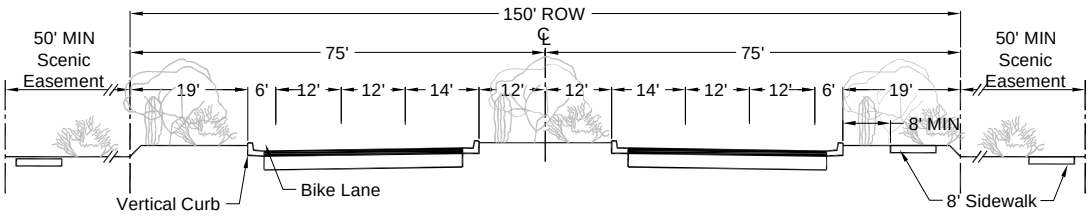

FIGURE 5.3-2. MAJOR ARTERIALS -- SUBURBAN CHARACTER

C. Urban Character

- Auxiliary turn lanes may be required at intersections with additional ROW requirements.
- Cross-sections may vary to fit surrounding topography.
- ADT: 35,000 - 55,000 vpd
- Design Speed: 45 - 55 mph
- Maximum Grade: 9.0%
- Minimum Grade: 0.4%

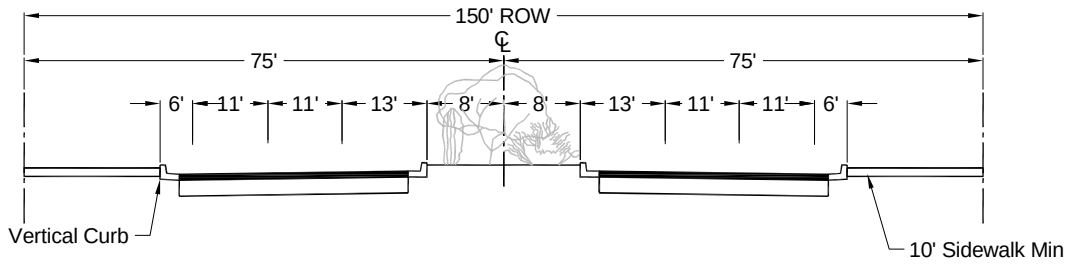

FIGURE 5.3-3. MAJOR ARTERIALS -- URBAN CHARACTER

MINOR ARTERIALS

5-3.102

A. Rural/ESL Character

- Auxiliary turn lanes may be required at intersections with additional ROW requirements.
- Cross-sections may vary to fit surrounding topography.
- ADT: 25,000 - 35,000 vpd
- Design Speed: 45 - 55 mph
- Maximum Grade: 9.0%
- Minimum Grade: 0.4%

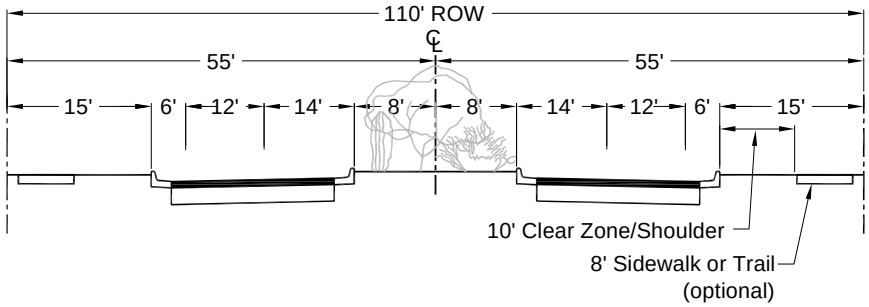

FIGURE 5.3-4. MINOR ARTERIALS -- RURAL/ESL CHARACTER

B. Suburban Character

- Auxiliary turn lanes may be required at intersections with additional ROW requirements.
- Cross-sections may vary to fit surrounding topography.
- ADT: 25,000 - 35,000 vpd
- Design Speed: 45 - 55 mph
- Maximum Grade: 9.0%
- Minimum Grade: 0.4%

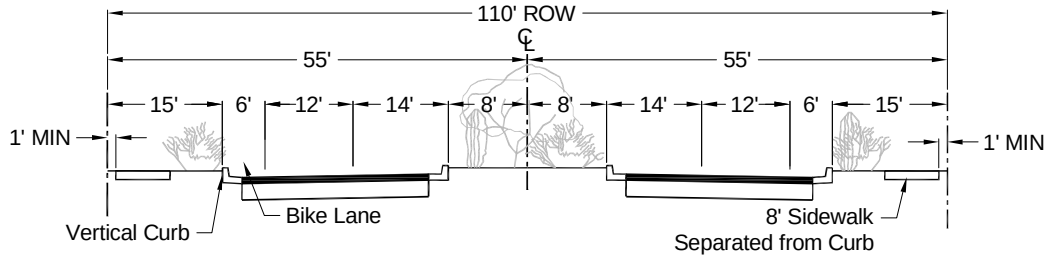

FIGURE 5.3-5. MINOR ARTERIALS -- SUBURBAN CHARACTER

C. Urban Character

- Auxiliary turn lanes may be required at intersections with additional ROW requirements.
- Cross-sections may vary to fit surrounding topography.
- ADT: 35,000 - 55,000 vpd
- Design Speed: 45 - 55 mph
- Maximum Grade: 9.0%
- Minimum Grade: 0.4%

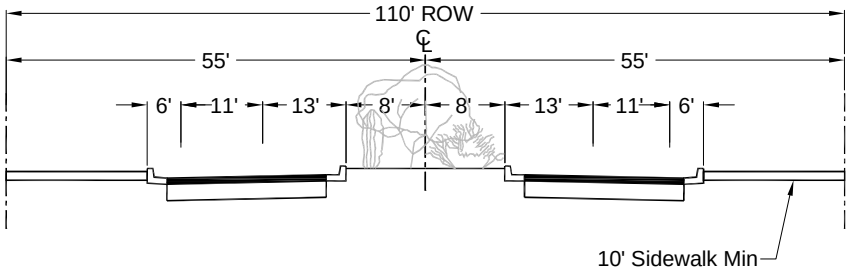

FIGURE 5.3-6. MINOR ARTERIALS -- URBAN CHARACTER

5-3.103 COUPLETS

- Couplet to be constructed in accordance with the Downtown Urban Design Guidelines
- Auxiliary turn lanes may be required at intersections with additional ROW requirements.
- Cross-sections may vary to fit surrounding topography.
- ADT: 25,000 - 35,000 vpd
- Design Speed: 45 mph
- Maximum Grade: 9.0%
- Minimum Grade: 0.4%

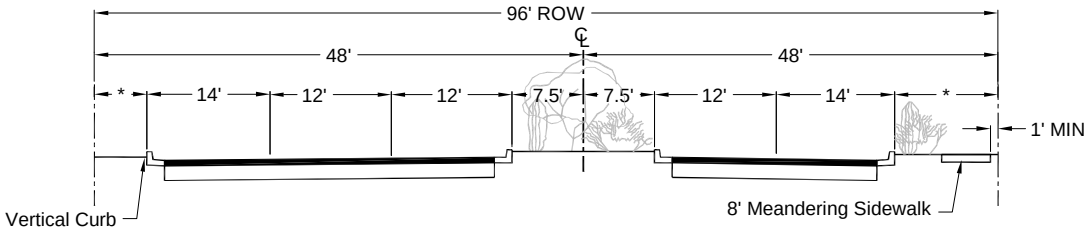

FIGURE 5.3-7. COUPLET STREETS

MAJOR COLLECTORS

5-3.104

A. Rural/ESL Character

- Auxiliary turn lanes may be required at intersections with additional ROW requirements.
- Cross-sections may vary to fit surrounding topography.
- ADT: 25,000 - 35,000 vpd
- Design Speed: 35 - 45 mph
- Maximum Grade: 9.0%
- Minimum Grade: 0.4%

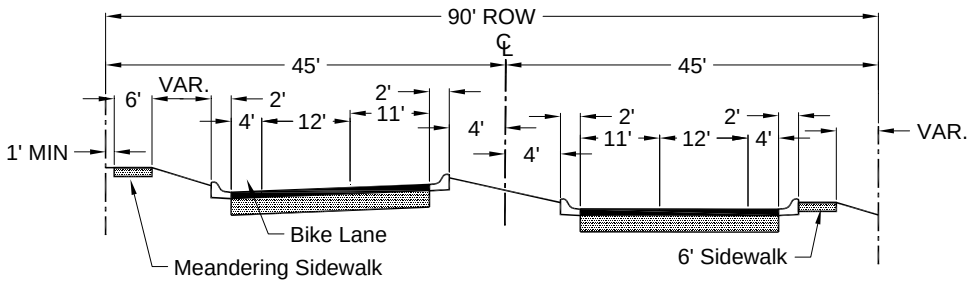

FIGURE 5.3-8. MAJOR COLLECTORS -- RURAL/ESL CHARACTER

B. Suburban Character

- Auxiliary turn lanes may be required at intersections with additional ROW requirements.
- Cross-sections may vary to fit surrounding topography.
- ADT: 25,000 - 35,000 vpd
- Design Speed: 35 - 45 mph
- Maximum Grade: 9.0%
- Minimum Grade: 0.4%

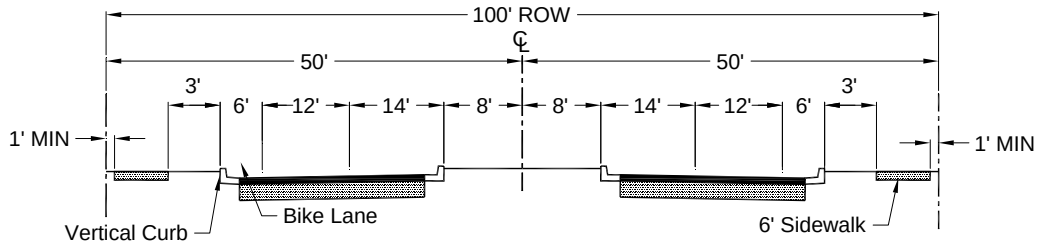

FIGURE 5.3-9. MAJOR COLLECTORS -- SUBURBAN CHARACTER

C. Urban Character

- Auxiliary turn lanes may be required at intersections with additional ROW requirements.
- Cross-sections may vary to fit surrounding topography.
- ADT: 25,000 - 35,000 vpd
- Design Speed: 35 - 45 mph
- Maximum Grade: 9.0%
- Minimum Grade: 0.4%

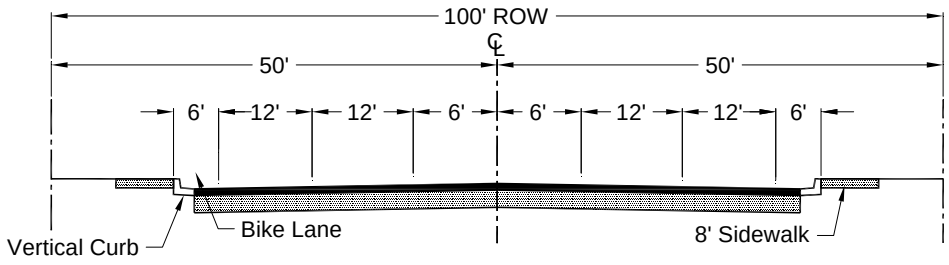

FIGURE 5.3-10. MAJOR COLLECTORS -- URBAN CHARACTER

5-3.105 MINOR COLLECTORS

A. Rural/ESL Character with Trails

- Auxiliary turn lanes may be required at intersections with additional ROW requirements.
- Cross-sections may vary to fit surrounding topography.
- ADT: 25,000 - 35,000 vpd
- Design Speed: 35 mph
- Maximum Grade: 12.0%
- Minimum Grade: 0.4%

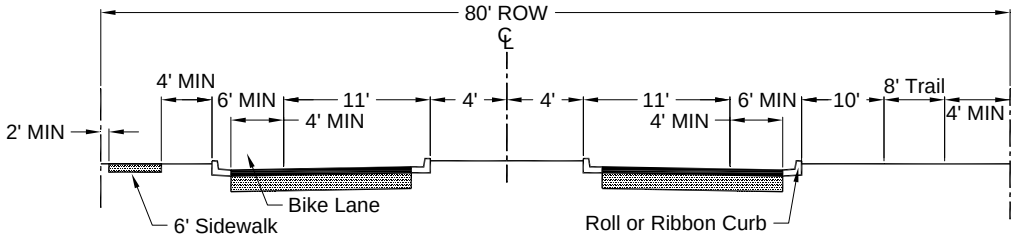

FIGURE 5.3-11. MINOR COLLECTORS -- RURAL/ESL WITH TRAILS

B. Rural/ESL Character

- Auxiliary turn lanes may be required at intersections with additional ROW requirements.
- Cross-sections may vary to fit surrounding topography.
- ADT: 25,000 - 35,000 vpd
- Design Speed: 35 mph
- Maximum Grade: 12.0%
- Minimum Grade: 0.4%

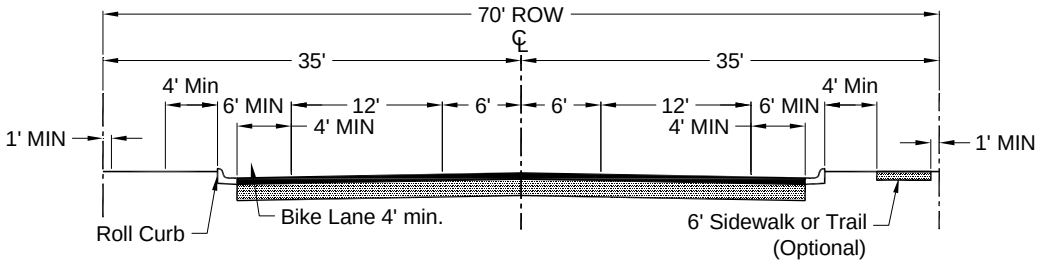

FIGURE 5.3-12. MINOR COLLECTORS -- RURAL/ESL CHARACTER

C. Suburban Character

- Auxiliary turn lanes may be required at intersections with additional ROW requirements.
- Cross-sections may vary to fit surrounding topography.
- ADT: 25,000 - 35,000 vpd
- Design Speed: 35 mph
- Maximum Grade: 12.0%
- Minimum Grade: 0.4%

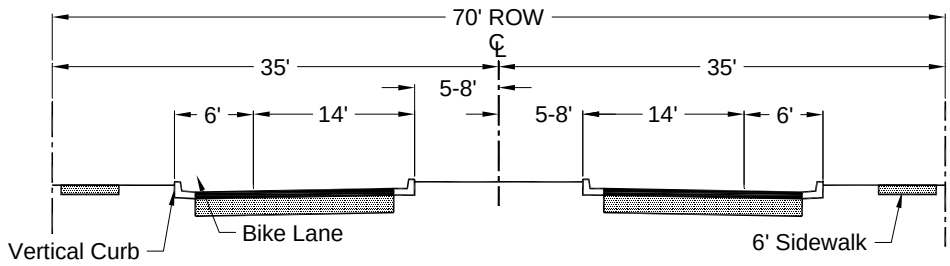

FIGURE 5.3-13. MINOR COLLECTORS -- SUBURBAN CHARACTER

D. Urban Character

- Auxiliary turn lanes may be required at intersections with additional ROW requirements.
- Cross-sections may vary to fit surrounding topography.
- ADT: 25,000 - 35,000 vpd
- Design Speed: 35 mph
- Maximum Grade: 12.0%
- Minimum Grade: 0.4%

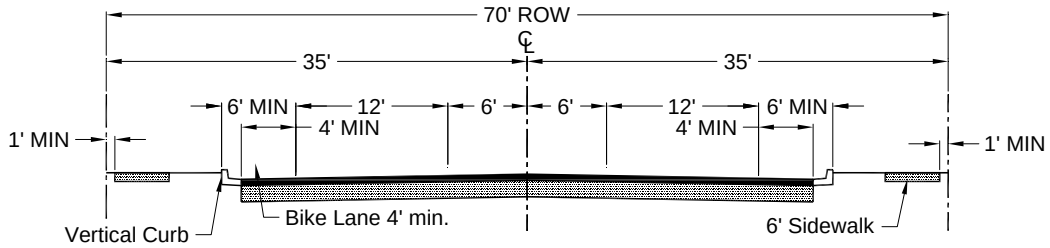

FIGURE 5.3-14. MINOR COLLECTORS -- URBAN CHARACTER

LOCAL COLLECTORS

5-3.106

A. Rural/ESL Character with Trails

- Auxiliary turn lanes may be required at intersections with additional ROW requirements.
- Cross-sections may vary to fit surrounding topography.
- ADT: 1,500 - 5,000 vpd
- Design Speed: 30 mph
- Maximum Grade: 12.0%
- Minimum Grade: 0.4%

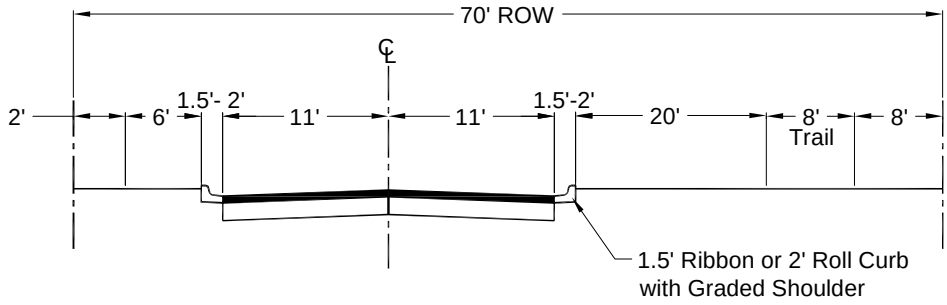

FIGURE 5.3-15. LOCAL COLLECTORS -- RURAL/ESL WITH TRAILS

B. Rural/ESL Character

- Auxiliary turn lanes may be required at intersections with additional ROW requirements.
- Cross-sections may vary to fit surrounding topography.
- ADT: 1,500 - 5,000 vpd
- Design Speed: 30 mph
- Maximum Grade: 12.0%
- Minimum Grade: 0.4%

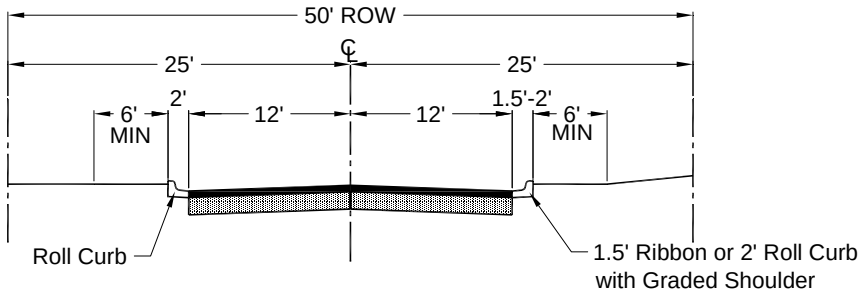

FIGURE 5.3-16. LOCAL COLLECTORS -- RURAL/ESL CHARACTER

C. Suburban Character

- Auxiliary turn lanes may be required at intersections with additional ROW requirements.
- Cross-sections may vary to fit surrounding topography.
- ADT: 1,500 - 5,000 vpd
- Design Speed: 30 mph
- Maximum Grade: 12.0%
- Minimum Grade: 0.4%

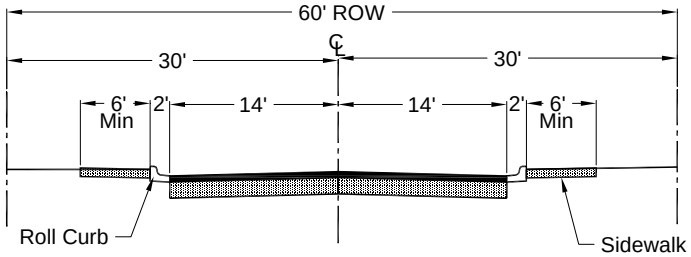

FIGURE 5.3-17. LOCAL COLLECTORS -- SUBURBAN CHARACTER

LOCAL RESIDENTIAL

5-3.107

A. Rural/ESL Character with Trails

- Auxiliary turn lanes may be required at intersections with additional ROW requirements.
- Cross-sections may vary to fit surrounding topography.
- ADT: 1,500 vpd Max.
- Design Speed: 20 mph
- Maximum Grade: 15.0%
- Minimum Grade: 0.4%

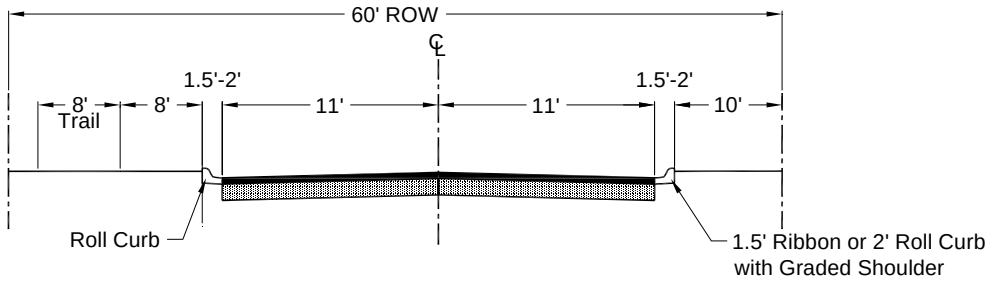

FIGURE 5.3-18. LOCAL RESIDENTIAL -- RURAL/ESL WITH TRAILS

B. Rural/ESL Character

- Auxiliary turn lanes may be required at intersections with additional ROW requirements.
- Cross-sections may vary to fit surrounding topography.
- ADT: 1,500 vpd Max.
- Design Speed: 20 mph
- Maximum Grade: 15.0%
- Minimum Grade: 0.4%

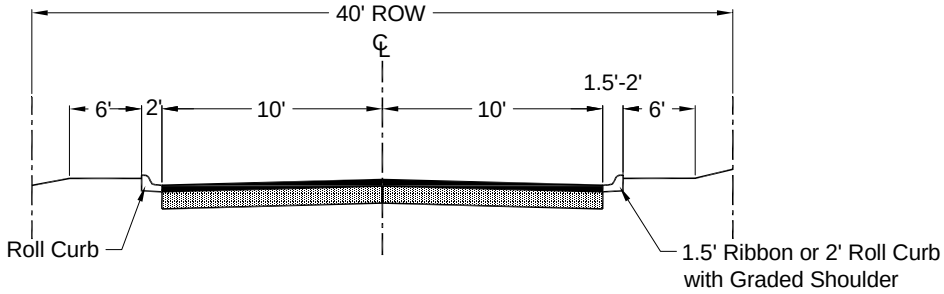

FIGURE 5.3-19. LOCAL RESIDENTIAL -- RURAL/ESL CHARACTER

C. Suburban Character

- Auxiliary turn lanes may be required at intersections with additional ROW requirements.
- Cross-sections may vary to fit surrounding topography.
- ADT: 1,500 vpd Max.
- Design Speed: 20 mph
- Maximum Grade: 15.0%
- Minimum Grade: 0.4%

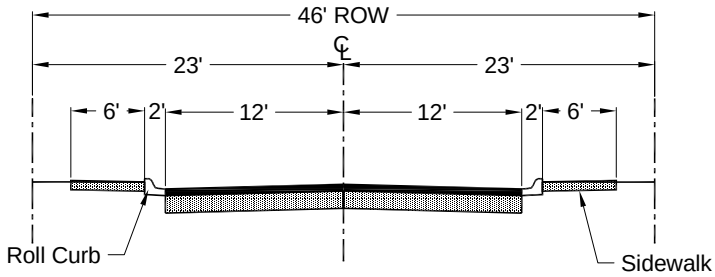

FIGURE 5.3-20. LOCAL RESIDENTIAL -- SUBURBAN CHARACTER

5-3.108 LOCAL COMMERCIAL / INDUSTRIAL

- Auxiliary turn lanes may be required at intersections with additional ROW requirements.
- Cross-sections may vary to fit surrounding topography.
- ADT: 1,500 - 5,000 vpd
- Design Speed: 20 mph
- Maximum Grade: 15.0%
- Minimum Grade: 0.4%

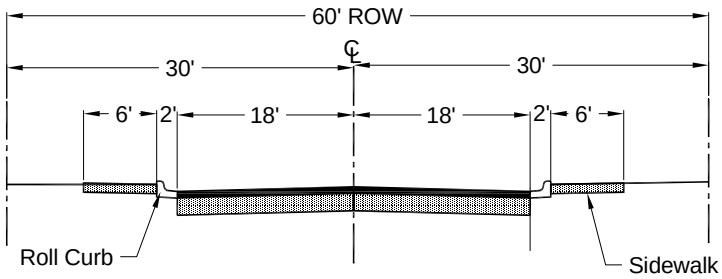

FIGURE 5.3-21. LOCAL COMMERCIAL / INDUSTRIAL

5-3.109 STREET RIGHTS-OF-WAY REQUIREMENTS

Rights-of-way requirements are based on the space needed for the street to meet ultimate development requirements (see Section 5-2 for detailed and Section 5-3.100). Rights-of-way provides space for utilities, cut or fill slopes, sidewalks, bicycle paths, trails, traffic control devices and information signs, fire hydrants, landscaping, transit facilities, and other public facilities that must be located adjacent to street pavements. Additional rights-of-way may be required at major intersections to provide for turn lanes.

Rights-of-way widths in excess of the standard widths may be required in special circumstances such as when:

- Cut or fill slopes cannot be confined within the standard width;
- Minimum sight distance lines on horizontal curves are not within the standards;
- Minimum sight distances at intersections are not within the standards;
- Auxiliary lanes are to be provided.

PAVEMENT CROSS-SECTION SLOPES 5-3.110

A. Typical Street Cross-Sections

Undivided streets should have a normal crown that is a two-way cross-slope with the cross-section high point on the street centerline. Divided streets should have cross-slope on each pavement section. The high point of each slope on each pavement section must occur on the edge of the pavement nearest to the median. Unusual conditions may cause cross-slope requirements to vary, but normally, the desirable cross-slope is 2%, with a maximum cross-slope of 3%. Any deviation from the desirable cross-slope is subject to review by the Transportation Department.

B. Cross-Sections in Street Dip Sections

While dip sections are discouraged, where storm drainage runoff flows must cross the street, dip sections are needed. The pavements through the dip section should have a one-way slope (no crown), curbing and medians must not be raised, and cut-off walls must be installed in accordance with city of Scottsdale standard details. Transitions back to normal street cross-slopes will be needed at both ends of the dip section.

MEDIANS 5-3.111

A. Median Widths

Median widths are measured from back of median curb to back of median curb; where there is no curb, width is measured from the centers of the continuous, painted median stripes. Median widths are specified in Appendices 5-3A and 5-3B. In special circumstances, the Transportation Department may approve other widths.

B. Paved Medians

A median four feet wide or less should be paved. The paved surface should be crowned and have the same cross-slope as the street pavement. Typical median paving materials are Portland cement concrete or concrete pavers.

C. Unpaved and Landscaped Medians

Medians that are five feet or more in width are normally not paved. The grading of the unpaved areas should be as shown in Figure 5.3-22. If a median is to be landscaped, it shall be at least 4 feet wide. In the vicinity of intersections, landscaping and other median features must not restrict sight distance for left turning vehicles on the through street or for vehicles entering from the side street. Refer to Appendices 5-3A and 5-3B, Section 5-3.116.B.2 and Section 5-3.118 for specific sight distance criteria.

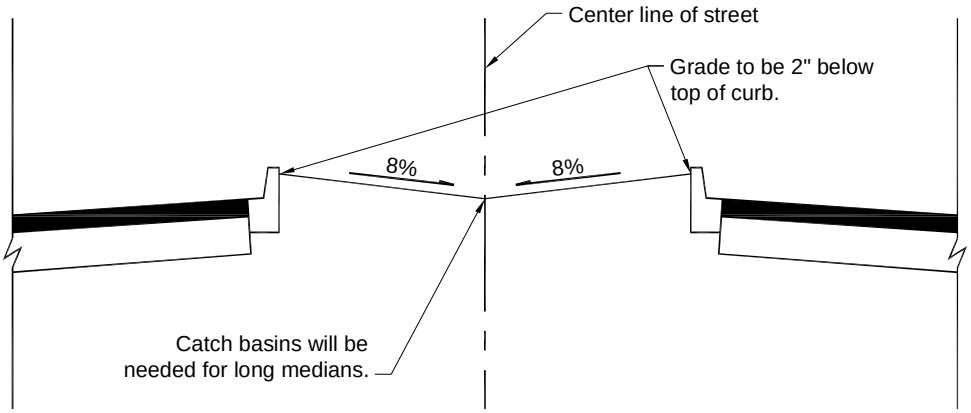

FIGURE 5.3-22. MEDIAN GRADING

5-3.112 CURBS

A. Vertical Curbs

Vertical curbs are generally required for all streets in urban and suburban areas except local residential streets (see Appendices 5-3A and 5-3B). Vertical curbs may be used in place of roll curbs on local streets if desirable for drainage considerations. Vertical curb should not be utilized as a barrier on high-speed roadways (travel speeds 45 mph or greater); refer to the AASHTO **Roadside Design Guide** for more information.

Vertical curbs with gutter are to be constructed in accordance with city of Scottsdale **Supplemental Standard Details for Public Works Construction**, matching the adjacent pavement slope to the gutter cross slope direction. The curb height shown on the standard detail is 6 inches, but the following variations may be used where appropriate.

1. Where fire lane or public maintenance vehicle access to abutting property must be provided over the curb, use city of Scottsdale mountable curb and gutter.
2. If special drainage requirements make a higher curb necessary, the curb may be increased to 8 inches maximum and the gutter may be increased to 24 inches wide.

B. Roll Curb

A roll curb is preferred for local residential and local collector streets to provide direct lot access and for drainage considerations, especially on streets with adjacent sidewalk. Roll curbs may be used on major and minor collector streets where an adequate clear zone is provided. They are to be constructed in accordance with MAG Standard Details.

C. Ribbon Curb, Maricopa Edge

Ribbon curb may be used in lieu of roll curb for local residential streets in low-density, large lot areas (typically where lot size is greater than 20,000 square feet). Type A Maricopa Edge may also be used for local residential streets in similar rural conditions with approval from the Transportation Department. When ribbon curb or Maricopa Edge is used, drainage runoff from the road should not drain along the road but will be directed to roadside drainage ditches. See Section 4.403.C, “Design Criteria for Roadside Ditches,” and Figure 4-1 for a typical cross section.

Ribbon curb or Maricopa Edge should also be used on the outside lanes of arterial streets in rural areas (speed limit 45 mph or greater, access point average equals 500 feet or greater) with a shoulder and an adequate clear zone provided.

D. Median Curb

In locations where raised medians are constructed, vertical curb should generally be utilized. Roll curb may be used around medians on low speed, low volume streets, typically associated with traffic calming projects, or where needed to maintain adequate width for emergency vehicles.

E. Cut-Off Walls

In locations where dip sections are permitted to allow drainage flows to cross roadways, cut-off walls conforming to city of Scottsdale standard details must be installed on both the upstream and downstream sides of the roadway. Cut-off walls must be at least 3 feet deep and have a top that is flush with the pavement surface. The exposed portion of the cut-off wall will have the appearance of a ribbon curb, with the same width as the street's regular curb and gutter (see Figure 5.3-23). The cut-off walls must extend across the flow path in the dip section to protect the pavement structure during runoff flows from a 100-year storm. Transitions will be needed between the regular curb and the cut-off wall at each end of the dip section.

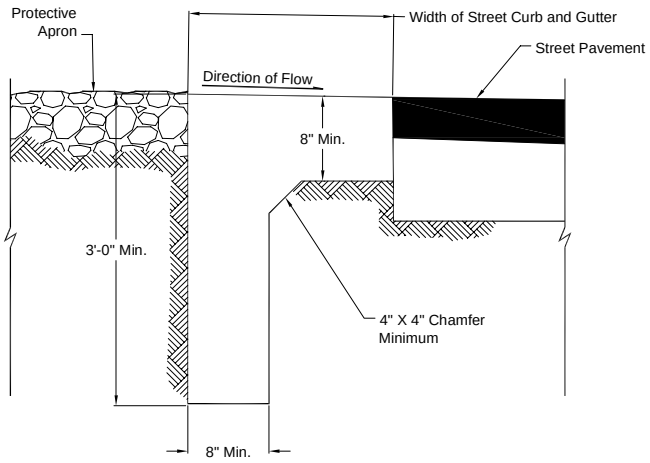

FIGURE 5.3-23. CUT-OFF WALLS

F. Curb Returns

Vertical curb should be used through the curb return from PC to PT regardless of whether the tangent curb sections are vertical or roll curb. All curb returns must be provided with sidewalk from PC to PT of the same width as that provided for the sidewalk behind the tangent curb sections. If no sidewalk is provided behind the tangent curb sections, the curb return sidewalk should be at least five feet wide.

1. **Curb Return Radii**
   The radii for curb returns measured to the back of curb will be 25 feet for local street intersections - those that involve either a local collector street or local residential street. The radii for curb returns measured to the back of curb shall be 30 feet for all other major street intersections. Smaller radii may be approved by the Transportation Department in urban areas with higher pedestrian activity.

2. **Sidewalk Ramp at Curb Return**
   Dual sidewalk ramps will be constructed at all curb returns (on all street classifications) in accordance with MAG Standard Details and the city's supplemental standards. Truncated domes will be installed on all sidewalk ramps per ADA guidelines. If a traffic signal exists or is planned, the ramp and apron must provide access to the pedestrian push button. These standards apply to both public and private streets.

SELECTION OF A DESIGN SPEED 5-3.113

The design of geometric features such as horizontal and vertical curves will depend upon the design speed selected for the street. The choice of the design speed is primarily determined by the street classification. The design speed is the maximum speed for the safe operation of a vehicle. Design speeds for the various classifications of streets are identified on Appendices 5-3A and 5-3B; the use of design speeds other than those shown may be approved through the master plan process. The Transportation Department must approve all other exceptions.

SUPERELEVATION IN CURVES 5-3.114

Superelevation is discouraged on horizontal curves in the portion of the city outside the Environmentally Sensitive Lands area.

A. 0.02 ft/ft Superelevation Rate

A superelevation rate of 0.02 ft/ft may be used when the standard radius cannot be provided due to circumstances beyond the control of the engineer, and the roadway alignment cannot be changed (as determined by city staff).

B. Superelevation Rate Greater than 0.02 ft/ft

A superelevation rate greater than 0.02 ft/ft may not be used except when approved by the Transportation Department. In no case shall a superelevation exceed 0.06 ft/ft.

C. Transition for Superelevation

The length of superelevation transition is based on the superelevation rate and the width of rotation. The axis of rotation is generally the pavement centerline. The transition lengths for a superelevation rate of 0.02 ft/ft are provided in Appendices 5-3A and 5-3B. For other superelevation rates, refer to the AASHTO's Policy on Geometric Design.

In designing the beginning or ending of a horizontal curve, 1/3 of the transition is on the curve and 2/3 of the transition is on the tangent pavement section.

D. Drainage on Superelevated Curves

Whenever superelevation is allowed on a divided street, a storm drainage system must be provided to collect the runoff along the median curb. Nuisance water from the higher traveled area is not allowed to cross the lower traveled area.

5-3.115 HORIZONTAL CURVES

Horizontal alignments need to provide safe and continuous operation of motor vehicles at a uniform design speed for substantial lengths of street. A horizontal curve is required when the angle of change in horizontal alignment is equal to or greater than five degrees. The nature of the surrounding development and topography, and the street classification will establish the factors that determine the radius of a curve.

A. Minimum Radii of Curvature

The minimum radius of curvature is determined by the design speed or by the stopping sight distance.

1. **Minimum Radii Based on Design Speed:**
   Appendices 5-3A and 5-3B contain the minimum radius of curvature for each street classification with and without a superelevation rate of 0.02 ft/ft. Wherever possible, the radii used in design needs to be larger. If stopping sight distance conditions require a larger radius than that shown in these appendices, then that larger radius becomes the minimum radius for the curve.

2. **Consideration of Stopping Sight Distance**
   When walls, buildings, bridge piers, cut slopes, vegetation, or other obstructions are near the roadway on the inside of a curve, they can block a driver's view of the road ahead. If they are too close, the driver will not have sufficient distance along the curved roadway to stop when a hazardous condition comes into view. For design, the driver's eye is 3.5 feet above the center of the inside lane (the driving lane closest to the inside of the curve) and a hazardous condition is an object 2.0 feet high in the center of the inside lane, or per currently accepted AASHTO standards. The clear distance, "M," is measured from the center of the inside lane to the view obstruction. Figure 5.3-24 depicts these relationships and a table of minimum stopping sight distances for various design speeds.

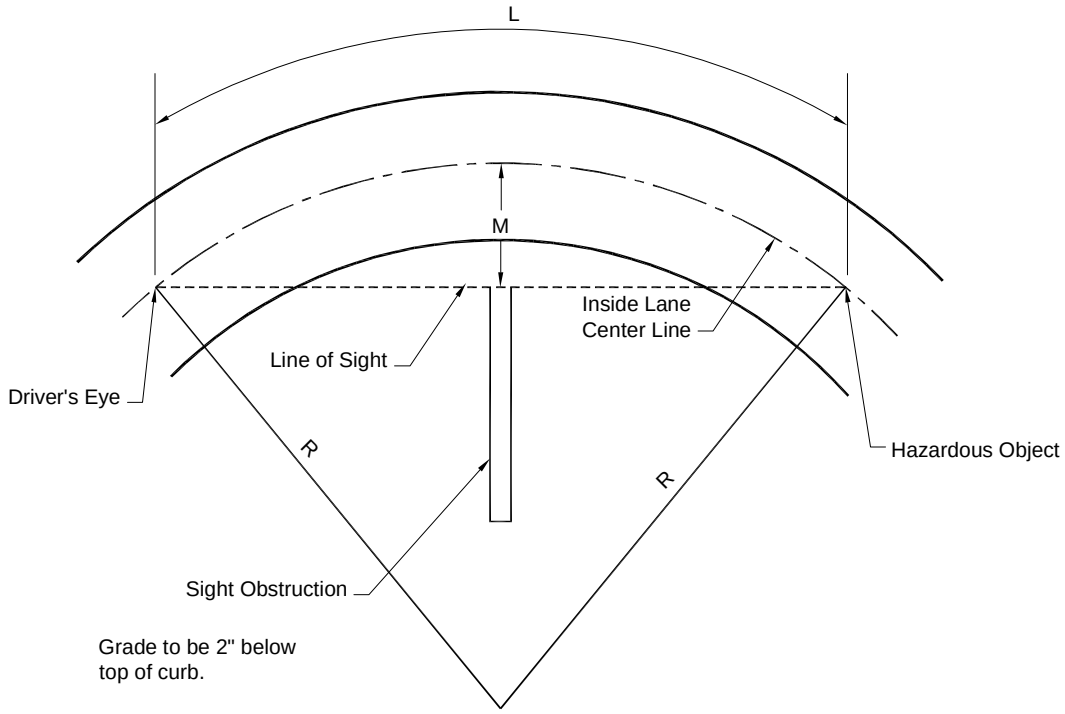

If the stopping sight distance, S, and the radius to the center of the inside lane, R, are known, the distance, M, is found by the following equation:

$$M = R[1-COS(28.65\ S/R)]$$

If the radius, R, and the distance, M, are tentatively selected, then the length, L, of the arc in the middle of the inside lane may be found by the following equation:

$$L = (R/28.65)ARRCCOS[(R-M)/R]$$

If the length, L, is less than the stopping sight distance for the desired speed, either the radius, R, or the distance, M, must be increased.

Design Speed MPH	20	25	30	30	30	45	50	50	60	65
Stopping Sight Distance, S, (ft.)	125	150	200	225	300	365	440	500	590	640

FIGURE 5.3-24. VIEW OBSTRUCTIONS AND HORIZONTAL CURVES

B. Reduced Design Speeds on Curves

The reduction of a street design speed on a curve should be avoided; however, where physical restrictions prohibit increasing the radius of the curve or the clear distance, "M," the design speed for the curved section may be reduced. In such circumstances, appropriate signage in accordance with the **Manual on Uniform Traffic Control Devices** (MUTCD) is required. The difference between the design speed for the roadway approaching the curve and the design speed for the curve cannot be greater than 10 miles per hour. The design speed for a curved roadway section must not be reduced if the reduction occurs at the end of a long tangent or at any location where high approach speeds may be expected.

C. Compound Curves

Compound curves should be avoided; however, if site conditions make the use of compound curves unavoidable, the shorter radius needs to be at least 2/3 the length of the

longer radius. Compound curves are not permitted when design speeds require the shorter radius to be greater than 1,000 feet.

D. Tangent Sections Between Curves in the Same Direction

On two-lane roads, tangent sections are needed between two curves in the same direction. If the pavement cross-sections throughout the curves do not have superelevation then the minimum lengths for tangent sections are listed in Appendices 5-3A and 5-3B.

If superelevation is provided in the curved portions of the roadway, then the superelevation transition lengths indicated will determine the tangent lengths.

E. Tangent Sections Between Reverse Curves

Generally a tangent section must be provided between two curves that curve in the opposite direction. Minimum lengths for tangent sections between reverse curves without superelevation are provided in Appendices 5-3A and 5-3B. If the curve radii are at least 50% greater than the radii required by the design speed, a tangent section may not be required depending on grades, topography, and vegetation. If superelevation is provided for the curves, then the superelevation transition lengths indicated will determine the minimum length of tangent sections between reverse curves.

F. Tangent Sections Approaching Intersections

A tangent section must be provided between a street intersection and a curve unless otherwise approved by the Transportation Department. The minimum tangent length is shown in Appendices 5-3A and 5-3B.

5-3.116 VERTICAL ALIGNMENT

A vertical curve is required when grade changes are equal to or greater than 1.5%. All sections of a street's vertical alignment must meet passing and stopping sight distance requirements for the design speed established for the street. For specific details, see the AASHTO ‘s Policy on Geometric Design.

A. Longitudinal Street Grades

For arterial streets, the maximum longitudinal grade is 6%. For collector and local streets, the maximum grade is 9%. The minimum longitudinal street grade for all streets is 0.4%. Wherever possible, longitudinal street grades greater than or equal to the minimum grade are to be provided. Where necessary, grades less than 0.4% may be used with approval from the Municipal Services Department.

B. Vertical Curves

Properly designed vertical curves should provide adequate sight distance, safety, and effective drainage.

1. Type of Curve

A parabolic vertical curve is to be used. Figure 5.3-25 provides all necessary mathematical relations for computing a vertical curve, either crests or sags.

The following equations are for parabolic, for parabolic, vertical curves. The grades g_1 and g_2 must be used with their algebraic signs (+ or -). If g_1 and g_2 are expressed as percentages, L and X must be expressed in stations. If g_1 and g_2 are expressed as feet per foot, L and X must be expressed in feet. These symbols are defined by the above diagrams.

$$A = g_2 - g_1 \qquad D = g_1 - g_2 \qquad e = LG/8 \qquad y = 4e(X/L)^2 = (A/2l)X^2$$

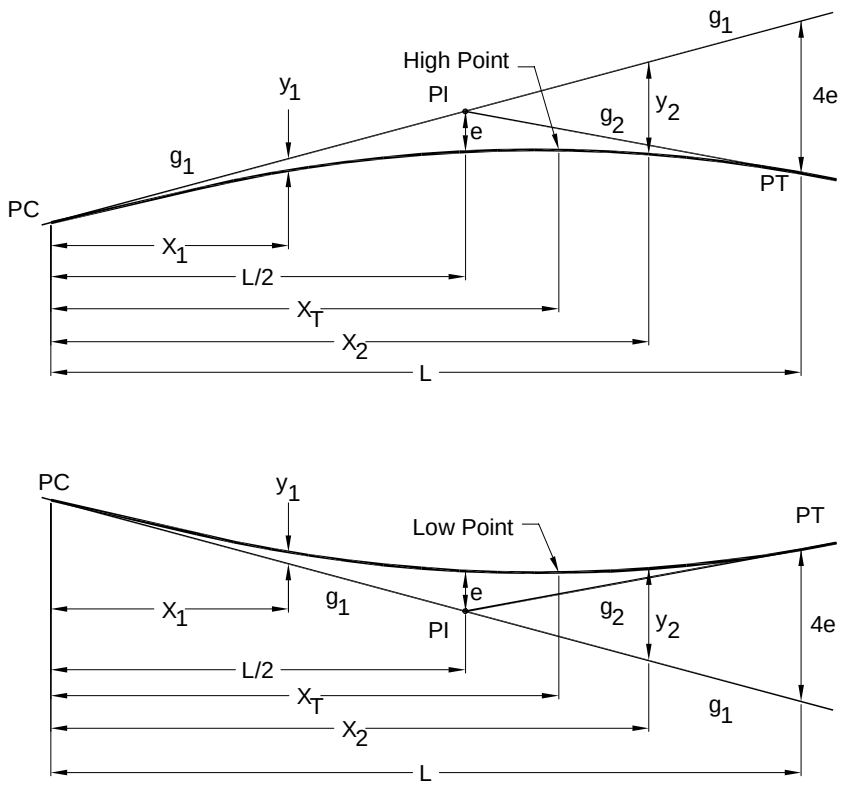

FIGURE 5.3-25. VERTICAL CURVE RELATIONSHIPS

The equation below provides the location, X_T, of the curve turning point -- the high point or low point on the curve. This equation is only applicable when g_1 and g_2 are not of the same sign, algebraically.

$$X_T = (g_1 L) / (g_1 - g_2)$$

2. Sight Distance Requirements

Sight distance is the continuous length of street ahead visible to the driver. For vertical alignment design, two sight distances are considered: passing sight distance and stopping sight distance. Stopping sight distance is the minimum sight distance to be provided at all points on multi-lane streets and on two-lane streets when passing sight distance is not economically obtainable as approved by city staff. Stopping sight distance needs to be provided in the vicinity of intersections. Appendices 5-3A and 5-3B list the minimum passing and stopping sight distances for the various street classifications and design speeds.

a. Stopping Sight Distance

The minimum stopping sight distance is the distance required by the driver of a vehicle, traveling at a given speed, to bring the vehicle to a stop after an object on the road becomes visible. Stopping sight distance is measured from the driver's eyes, 3.5 feet above the pavement surface, to an object 2.0 feet high on the roadway, or per currently accepted AASHTO standards.

b. Passing Sight Distance
Passing sight is the minimum sight distance that must be available to enable the driver of one vehicle to pass another vehicle safely, without interfering with the speed of an oncoming vehicle. The sight distance available for passing at any one place is the distance at which a driver, whose eyes are 3.5 feet above the roadway surface, can see the top 0.8 feet of an object 4.35 feet high on the road (corresponding to an object height of 3.5 feet high), or per currently accepted AASHTO standards.

3. Minimum Vertical Curve Lengths
Minimum vertical curve lengths are determined by sight distance requirements for a given design speed.

a. Crest Vertical Curve Lengths
Minimum crest curve lengths are determined by either the stopping sight distance or the passing sight distance, whichever provides the greatest curve length.

b. Minimum Crest Vertical Curve Length Determined by Stopping Sight Distance
The following equations are to be used to determine the minimum crest vertical curve lengths based upon stopping distance requirements, or per currently accepted AASHTO standards:

When $S_s < L$, $L = (AS_s^2)/2158$

When $S_s > L$, $L = (2S_s) - (2158/A)$

S_s = Stopping sight distance in feet for a given design speed.
L = Length of curve in feet.
A = Algebraic grade difference in percent.

c. Minimum Crest Vertical Curve Length Determined by Passing Sight Distance.
The following equations are to be used to determine the minimum crest vertical curve lengths based upon sight distance requirements:

When $S_p<L$, $L = (AS_p^2)/2800$

When $S_p>L$, $L = (2S_p) - (2800/A)$

S_p = Passing sight distance in feet for a given design speed.
L = Length of curve in feet.
A = Algebraic grade difference in percent.

4. Sag Vertical Curve Lengths
Minimum sag vertical curve lengths are determined by either the stopping sight distance or comfort factors. The longer of the two possible minimum curve lengths will be used.

a. Minimum Sag Vertical Curve Length Determined by Stopping Sight Distance
The following equations are to be used to determine the minimum sag vertical curve length based upon stopping sight distance requirements:

When $Ss<L$, $L = (AS_S^2)/(400 + 3.5S_S)$

When $Ss>L$, $L = (2S_S) - \{(400 + 3.5S_S)/A\}$

S_s = Stopping sight distance in feet for a given design speed.
L = Length of curve in feet.
A = Algebraic grade difference in percent.

b. Minimum Sag Vertical Curve Length Determined by comfort Factors
The following equation is to be used to determine the minimum sag vertical curve length based upon comfort factors:

$$L = (AV^2)/46.5$$

L = Curve length in feet.
A = Algebraic grade difference in percent.
V = Design speed in miles per hour.

COMBINED HORIZONTAL AND VERTICAL CURVES 5-3.117

When horizontal and vertical curves are combined, the horizontal curve needs to lead and follow the vertical curve, and not be introduced near the top or bottom of a crest vertical curve or bottom of a sag vertical curve. For additional information on this topic, refer to the AASHTO's **Policy on Geometric Design**.

INTERSECTIONS 5-3.118

Although all intersections share certain common elements, they are not subject to generalized treatment. To minimize conflicts and provide for anticipated traffic movements, each intersection must be evaluated based on individual characteristics and designed based on the following factors:

1. Traffic factors such as capacities, turning movements, vehicle size and operating characteristics, vehicle speed, pedestrian and bicycle movements, transit operations, and accident history.
2. Physical factors such as topography, existing conditions, channelization requirements, and available sight distance.
3. Human factors such as driving habits, reaction to surprises, decision and reaction time, and natural paths of movement.

A. Intersection Spacing

Intersections along major streets should be kept to a minimum. Along arterial streets, the minimum intersection spacing should be one-quarter mile (1320 feet). Along collector streets (major collectors and minor collectors), the minimum spacing should be one-eighth mile (660 feet). Along local streets (local residential and local collectors), the minimum spacing should be 250 feet. New intersections on major streets should be located to align with planned median openings. New intersections on minor streets should be located to avoid creating conflicting turning movements with existing intersections or driveways.

B. Angle of Intersection

A right-angle intersection provides the shortest crossing distance for intersecting traffic streams. It also provides the most favorable condition for drivers to judge the relative position and speed of intersecting vehicles. Where special conditions exist, intersection angles may diverge from a right-angle by a maximum of 2 degrees (up to 4 degrees with approval of the Transportation Department) on arterial streets, and major collector streets; and by a maximum of 4 degrees (up to 15 degrees with approval of the Transportation Department) on minor and local collector streets, couplets, and local streets.

C. Alignment and Profile

Intersections occurring on horizontal or crest vertical curves are undesirable. When there is latitude in the selection of intersection locations, vertical or horizontal curvature should be avoided. A line or grade change is frequently warranted when major intersections are involved. If a curve is unavoidable, it should be as flat as site conditions permit. Where the

grade of the through roadway is steep, flattening through the intersection is desirable as a safety measure.

The maximum profile grade through an intersection is six percent for arterials and collector streets and eight percent for local streets. The intersecting streets' profiles and cross slopes need to be coordinated with one another to ensure a safe and comfortable driving surface. Typically this may mean extending grades through the intersection for approximately 75 feet to 150 feet. Short vertical curves may be necessary in lieu of grade breaks.

D. Intersection Sight Distance

In order to provide the opportunity for vehicles at an intersection to safely cross or make left or right turns onto a through street, adequate sight distance must be provided. The sight distance requirements outlined below are required for all private and public street intersections and at all intersections of driveways onto public or private streets. Internal driveway intersections on private property are excluded from these requirements.

Sight lines are to be drawn on roadway and landscaping plans to represent the areas that must be free of all objects and topography in excess of 24 inches above the roadway surface. Figure 5.3-26 depicts the technique used to determine the driver's eye location and an approaching vehicle; a line is then drawn to connect these two points. Continuous unobstructed line of sight must be provided along this line and throughout the approach to the intersection, providing an unobstructed sight triangle to the side street driver. Vegetation placed within the sight triangle will be of a low variety that remains below 24 inches when mature. Trees can be considered within the triangle as long as the canopies are above 7 feet, they are a single trunk variety, and they are not spaced in a configuration that creates a "picket fence" effect.

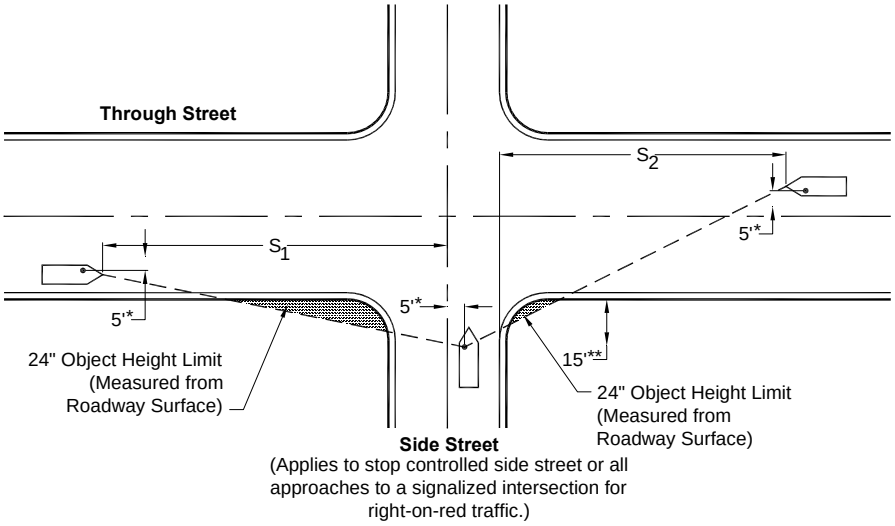

* 5 ft. measured to nearest lane line or centerline.
**15 ft. measured from face of curb or edge of travelway.

S_1 = Intersection sight distance in ft. on drivers left for right turns, left turns and through traffic.

S_2 = Intersection sight distance in ft. on drivers right for left turns or straight through traffic.

(See Appendices 5-3A and 5-3B for distances S_1 and S_2.)

FIGURE 5.3-26. INTERSECTION SIGHT DISTANCE REQUIREMENTS

1. **Right-Angle Intersections**
   Right-angle intersections are those whose legs meet at an angle of 88 to 90 degrees. For these right-angle intersections the sight distances shown in Appendices 5-3A and 5-3B are to be used with Figure 5.3-26 to calculate the sight triangle. The intersection sight distance for all street classifications except local industrial was determined assuming passenger car traffic. If high volumes of truck traffic are anticipated on other than local industrial streets, the procedures in the AASHTO Policy on Geometric Design should be consulted to determine the necessary sight distances. Sight distances for vehicles turning left from the main street should also be considered and calculated based on the AASHTO Policy on Geometric Design.

2. **Skewed Intersections**
   For skewed intersections where the intersection angles are less than 88 degrees, sight distances must be calculated in accordance with the procedures described in AASHTO's Policy on Geometric Design.

3. **Intersections within or near a curve**
   Sight distance measurements, identified as S_1 and S_2 in Figure 5.3-26, need to follow the curved street alignment when the intersection is within or near a horizontal curve.

4. **Traffic Safety Triangles**
   Traffic Safety Triangles should be used as a means to limit the height of structures, vegetation, and other improvements on corner properties immediately adjacent to intersections. **Safety triangles are not to be used as a substitute for intersection sight distance!** Safety triangles provide additional visibility around corners for all intersection approaches, and should be applied to the design of perimeter walls and landscape features. Items within the safety triangle cannot be higher than 24" measured from the roadway surface. Figure 5.3-27 depicts the method used to determine the safety triangle location. The sight distance requirements contained in both Figure 5.3-26 and Figure 5.3-27 are applied at all corner lots.

5. **Right-of-Way at Corners**
   A minimum 25-foot radius rights-of-way shall be dedicated at street intersections to provide room for traffic control and sight distance.

E. Auxiliary Lanes

An exclusive turning lane permits separation of conflicting traffic movements and removes turning vehicles from the flow of through traffic. Figures 5.3-28 and 5.3-29 depicts the design standards for auxiliary lanes. These standards apply for right and left turn lanes at street intersections and for deceleration lanes at mid-block driveways. The requirement for an auxiliary lane may necessitate additional rights-of-way. Modifications to the storage and transition lengths may be allowed by the Transportation Department where the conditions do not allow the full design standard to be met.

1. **Right-Turn Lanes**
   Right-turn lanes are required at all street intersections on major arterials. Right-turn lanes may be required by the Transportation Department on minor arterial and collector street intersections. The lane lengths should be determined based on the anticipated turning volume and whether there is signalized or unsignalized traffic control. The standard storage length for a right-turn lane is 150 feet, with a 100-foot minimum length.

2. **Left-Turn Lanes**
   Left-turn lanes are required at all street intersections on major collectors and arterials. Left-turn lanes may also be required at street intersections on minor collectors based on the projected left-turn volume and conflicting through volume. The lane lengths should be determined based on the anticipated turning volume and whether there is signalized or unsignalized traffic control. For left turn lanes at signalized intersections, dual turn lanes should be considered when the turn volume exceeds 200 vehicles per hour, the

opposing through volume exceeds 1,000 vehicles per hour, or the delay to left turning vehicles exceeds 45 seconds. Sight distance must be considered and calculated for these movements based on the AASHTO Policy on Geometric Design in order to determine the allowance of permitted left turns.

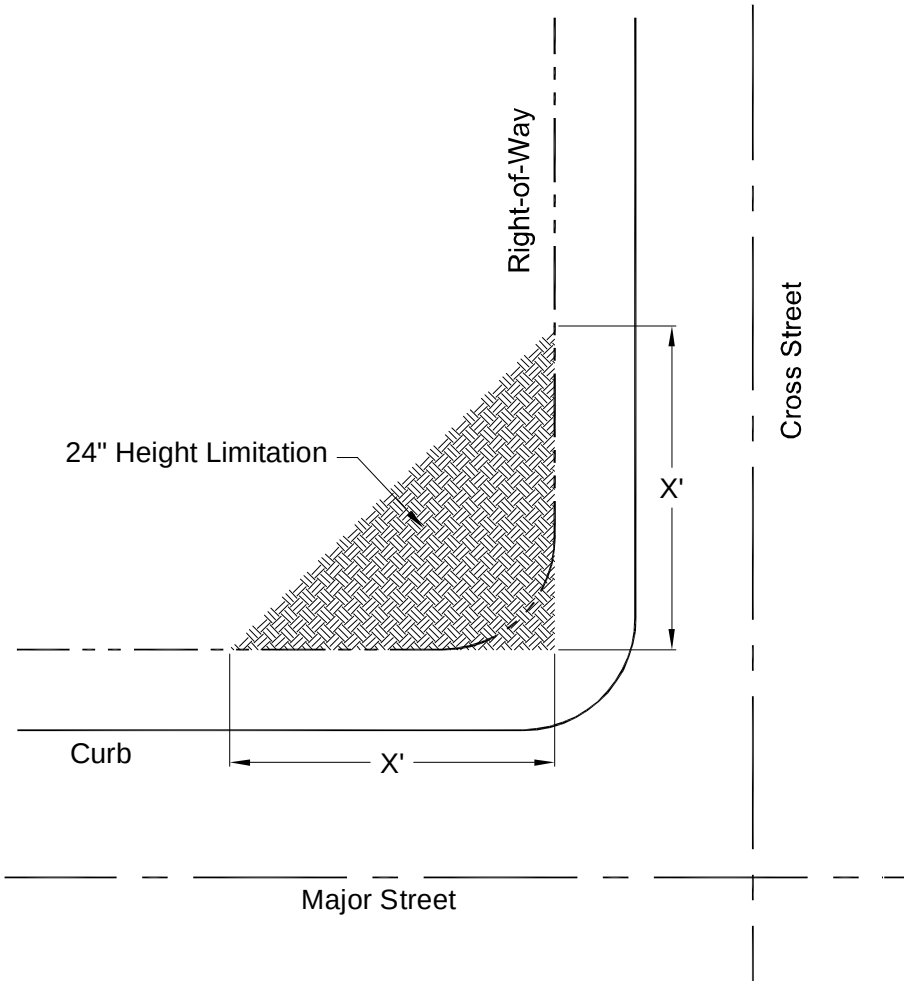

Major Street Classification	**X** (in feet)
Parkway, Expressway, Arterials, Major Collector	25
Minor Collector,	35
* Local Streets	35 / 60 / 70

* If the standard right-of-way (46 ft local residential, 60 ft local collector) is not available, the safety triangle (X) shall measure 60 ft on local residential streets and 70 ft on local collector streets from the center lines of the streets.

FIGURE 5.3-27. TRAFFIC SAFETY TRIANGLE ON CORNER PROPERTY

OPTION 1

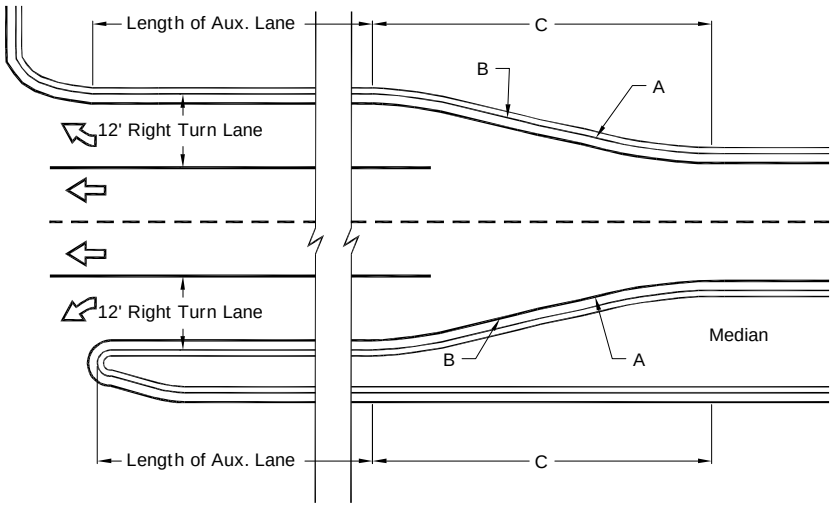

OPTION 2

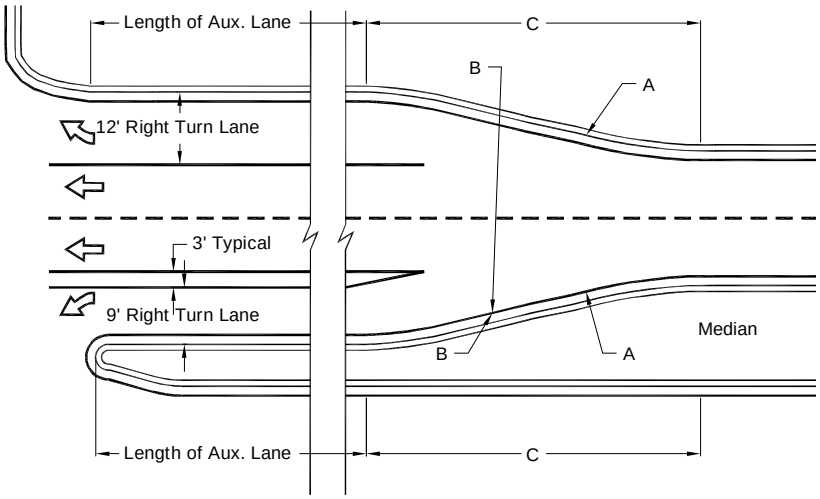

Street Classification	Dimensions in feet*		
	A (rad.)	B (rad.)	C
Major Collector	300	300	153.62
Minor Collector	300	150	103.23
Collector	150	150	84.00

Auxiliary lane lengths depend on local traffic needs.

*Assuming single left-turn lane; for dual left-turn lanes, consult the City of Scottsdale Standard Details.

FIGURE 5.3-28. AUXILIARY LANES – OPTIONS 1 & 2 – TO BE APPROVED BY STAFF

OPTION 3

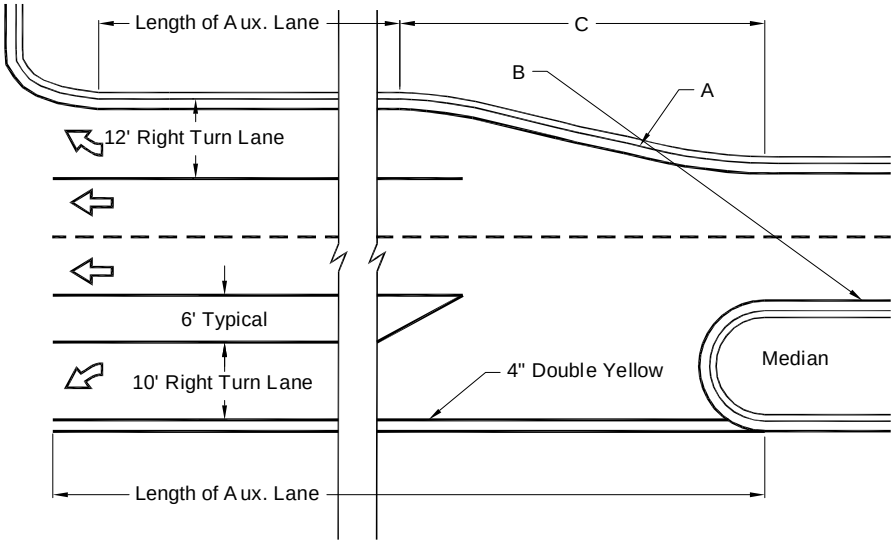

OPTION 4

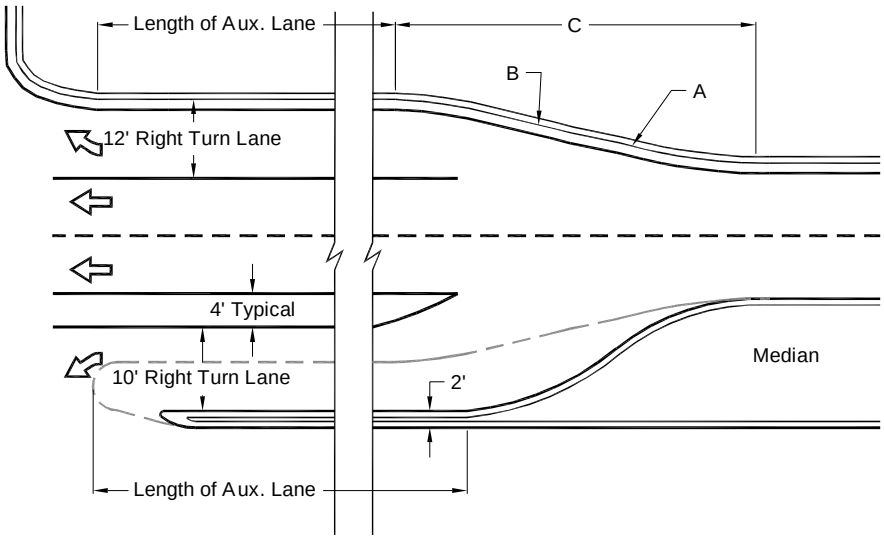

Street Classification	Dimensions in feet*			
	A (rad.)	B (rad.)	C	
Major Collector	300	300	153.62	Auxiliary lane lengths depend on local traffic needs.
Minor Collector	300	150	103.23	
Collector	150	150	84.00	

*Assuming single left-turn lane; for dual left-turn lanes, consult the City of Scottsdale Standard Details.

FIGURE 5.3-29. AUXILIARY LANES – OPTIONS 3 & 4 – TO BE APPROVED BY STAFF

F. Median Design

Raised medians are required on arterial streets and some major collector streets to separate traffic flows, channelize left turns, and reduce conflicts. On most collector streets, flush or painted medians provide space between the through traffic lanes for left turning vehicles. Standard median widths are listed for each street classification in Appendices 5-3A and 5-3B and as shown in Figures 5.3-30 through 5.3-34. Variations to these standards may be approved through the master plan process or by the Transportation Department.

1. Raised Medians

Raised medians, where required, must be provided in accordance with the applicable city of Scottsdale standard details, with the appropriate median width as noted above.

a. Spacing and Location of Median Openings

If a street has a raised median, it is not possible to provide an opening in the median for every street intersection or driveway location. Full median openings should occur at not less than one-quarter mile intervals (1320 feet) on major arterial streets. Partial median openings, which allow only left turns off the major street, are acceptable at one-eighth mile spacing (660 feet). On minor arterials, full median breaks should be no closer than one-eighth mile intervals with preferable one-quarter mile spacing. In built up areas, where reasonable alternate access is not available, median openings may be provided at smaller intervals with the approval of the Transportation Department.

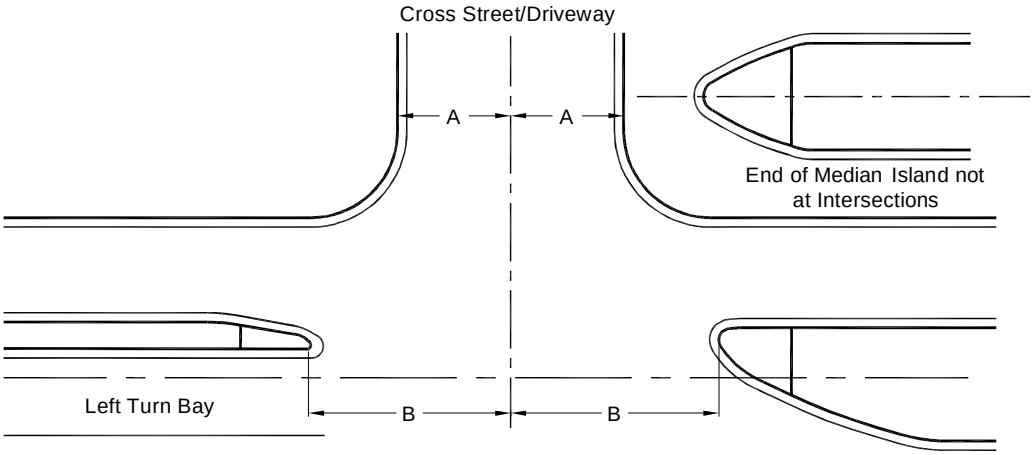

B = A + 14; 40' minimum

Notes:

1. This sketch is for a three leg intersection. If the intersection has four legs, the right side will also have an auxiliary lane for left turns, and the median on the right side will have the same configuration as the one on the seft side rotated 180 degrees.

2. See COS Standard Details for median dimensions.

FIGURE 5.3-30. MEDIAN OPENINGS FOR INTERSECTIONS

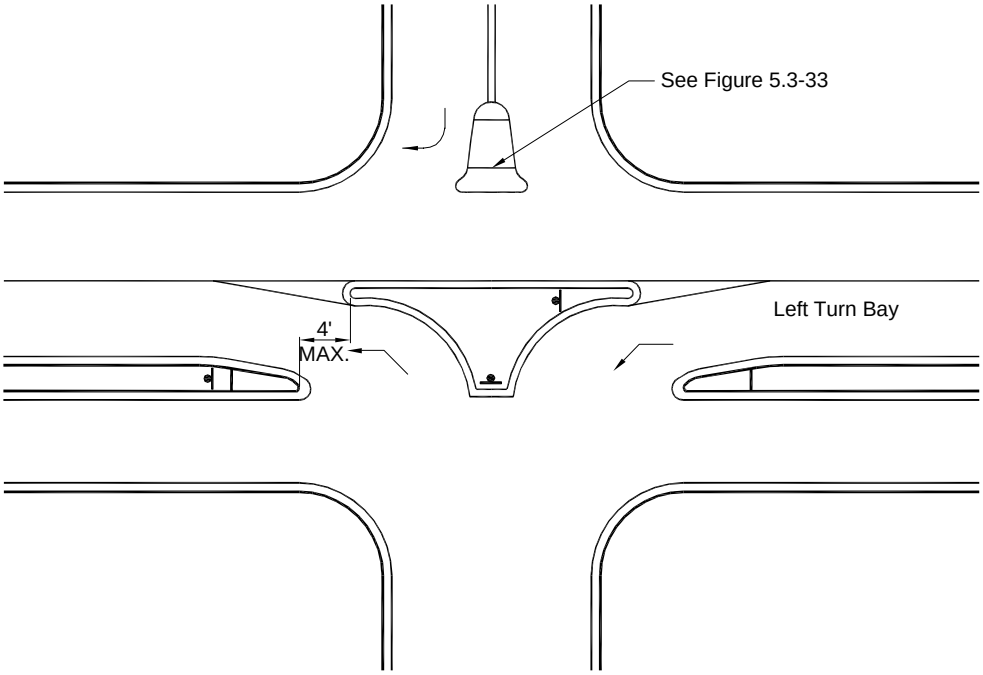

Note: Curbs may be vertical, rolled or painted to match existing roadway design or construction.

FIGURE 5.3-31. LEFT IN / LEFT OUT MEDIAN OPENINGS FOR INTERSECTIONS

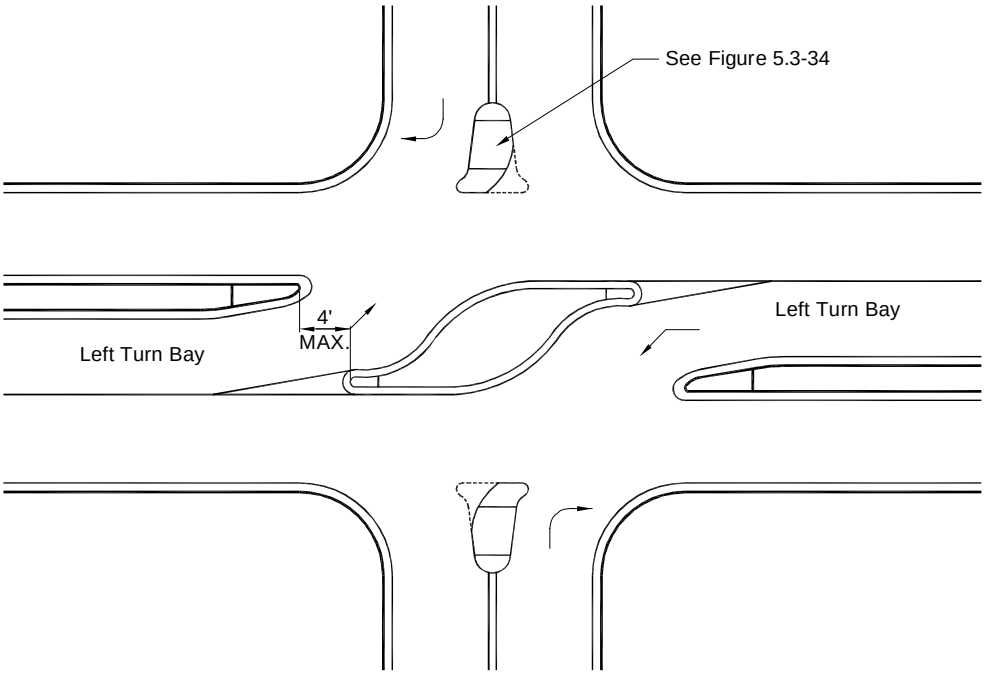

Note: Curbs may be vertical, rolled or painted to match existing roadway design or construction.

FIGURE 5.3-32. LEFT IN / LEFT IN MEDIAN OPENINGS FOR INTERSECTIONS

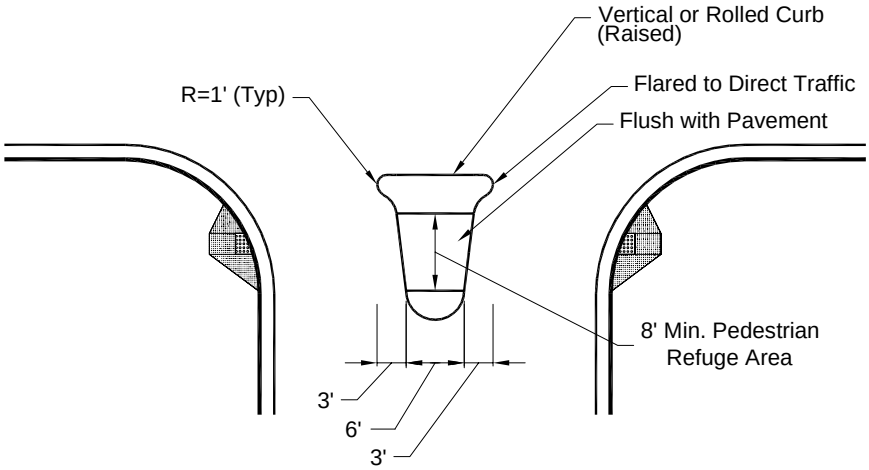

Note: Area of entire island must be a minimum of 30'.

FIGURE 5.3-33. RIGHT IN / RIGHT OUT MEDIAN WITH PEDESTRIAN REFUGE

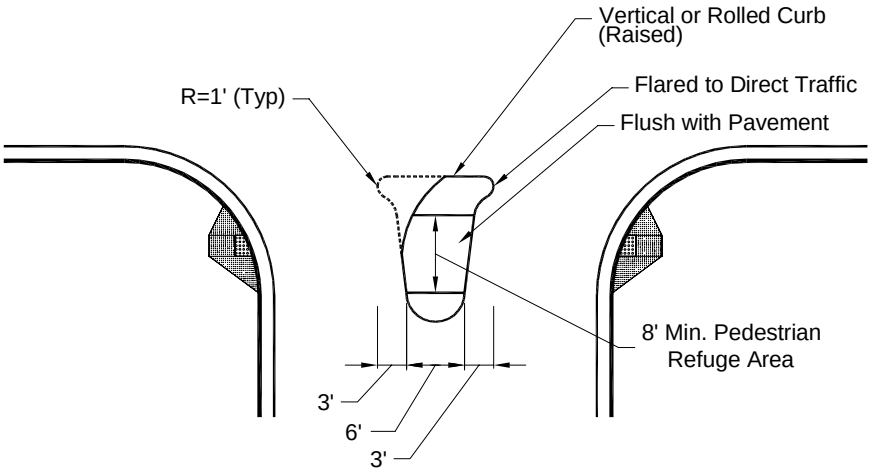

Note: Area of entire island must be a minimum of 30'.

FIGURE 5.3-34. LEFT IN / RIGHT OUT MEDIAN WITH PEDESTRIAN REFUGE

b. Configuration of Median Openings

If the street intersection legs intersect at an angle of 88 to 90 degrees, the configuration of the median opening will be determined by the information on Figure 5.3-30. If the streets intersect at an angle less than 88 degrees, the median opening configuration will have to be determined to the satisfaction of the Transportation Department.

c. Cross-Slope

The cross-slope in the median opening is limited to 0.02 ft/ft. Median openings on curves with superelevation exceeding 0.02 ft/ft will not be permitted.

2. Flush Medians
Flush, painted medians are required on major and minor collector streets without raised medians. Median widths for these streets are listed in Appendices 5-3A and 5-3B.

G. Traffic Control

Traffic control at all new intersections should initially be stop controlled on the minor street. Any higher means of traffic control, four-way stop or a traffic signal, will require approval by Traffic Engineering based on an approved engineering study. Guidelines for four-way stop and traffic signal controlled intersections are outlined below. Intersections of local residential streets within subdivisions are assumed to be stop controlled and will typically not need signage.

1. Four-Way Stop Controlled Intersections
Four-way (or multi-way) stop controlled intersections are allowed only when based on an engineering study approved by the Traffic Engineering based on the criteria contained in the MUTCD. Four-way stop control is generally utilized for the intersections of two similar classification streets where volumes are approximately equal or at intersections where there is a safety concern (such as limited sight distance).

2. Traffic Signal Controlled Intersections

a. Traffic Signal Warrants
New traffic signal controlled intersections are allowed only when based on an engineering study approved by Traffic Engineering using MUTCD criteria. Traffic signals warrants are generally based on existing traffic volumes, not projected traffic volumes. Contributions for future traffic signal construction are required for developments that are located at major intersections where traffic signal control is anticipated. Payment toward future construction should not be interpreted to mean a traffic signal is warranted. New intersections where a traffic signal is anticipated will require a preliminary traffic signal design to determine the proper location for the installation of underground conduit and pull boxes.

b. Traffic Signal Spacing
Traffic signals should be spaced no closer than one-half mile on major arterials and minor arterials, with one mile spacing desirable. Traffic signals should be spaced no closer than one-quarter mile on collector streets, with one-half mile spacing desirable. Closer spacing will interfere with traffic progression and signal coordination. Any deviation from these standards requires approval from the Transportation Department based on an approved study that indicates no significant deterioration in traffic progression.

H. Intersections with an Unpaved Leg

If an intersection has a leg that is unpaved, the paving needs to extend to the end of the normal curb return location on the unpaved leg (at a minimum) with a desired length of 50 from the edge of the roadway.

I. Valley Gutters at Street Intersections

Valley gutters may only be used across minor and local collector streets, and local residential streets. Exceptions must be approved by the Transportation Department. Valley gutters should be constructed in accordance with city of Scottsdale standard details.

5-3.200 STREET ACCESS & DRIVEWAYS

Driveway types are determined by land use type and street classification, as shown in Figure 5.3-35. The standards for these driveway types are illustrated in Figures 5.3-35 through 5.3–43.

Land Use	Street Classification	Driveway Type*	Location**
Single Family	Local Residential / Local Collector	S-1	All
Multi-Family	Local Residential / Local Collector	M-1	All
	Minor Collector	M-2 / CH-1	All
	Major Collector	M-2 / CH-1	All
	Minor Arterial / Major Arterial	M-2 / CH-1	Right-In, Right-Out
		CH-2, CH-3	Full Access
Commercial	Local Commercial	CL-1	All
	Minor Collector / Major Collector	CH-1	All
	Minor Arterial / Major Arterial	CH-1	Right-In, Right Out
		CH-2, CH-3	Full Access
Industrial	Local Industrial	CL-1	All
	Minor Collector / Major Collector	CH-1	All
	Minor Arterial / Major Arterial	CH-1	Right-In, Right-Out
		CH-2, CH-3	Full Access

* *See city of Scottsdale Standard Details and Figures 5.3-37 through 5.3-43.*

** *Right-In, Right Out driveways on arterial streets are where left-turns out of the driveway are prohibited by a median or an island. Full access driveways on arterial streets align with an approved median opening. Modifications to these standards are allowed by approval of city staff.*

FIGURE 5.3-35. DRIVEWAY TYPES

DRIVEWAY SPACING 5-3.201

Minimum driveway spacing will generally conform to the following standards. This minimum spacing applies to proposed site driveway separation as well as separation from existing or planned driveways on adjacent parcels.

Street Type	Minimum Distance Driveway Spacing
Local Residential/Local Collector	50 feet
Local Industrial/Local Commercial	165 feet
Minor Collector	165 feet
Major Collector	250 feet
Minor Arterial	330 feet
Major Arterial	500 feet

For sites that have frontage on two streets, primary access should be onto the minor street frontage. A maximum of two driveway openings is permitted to a particular site or parcel from the abutting street(s). The Transportation Department may permit additional driveway entrances when projected travel demands indicate it is in the interests of good traffic operation, and when adequate street frontage exists to maintain the above guidelines.

Where new development adjoins other similarly zoned property or compatible land uses, a cross access easement may be required to permit vehicular movement between the parcels and reduce the number of access points required onto the adjacent public street. This may be required regardless of the development status of the adjoining property, unless the cross access is determined to be unfeasible by city staff.

5-3.202 DRIVEWAY LOCATION LIMITATIONS

A new access driveway will not be allowed (measured to the driveway centerline):

1. Within 30 feet of any commercial property line, except when it is a joint-use driveway serving two abutting commercial properties and access agreements have been exchanged between, and recorded by, the two abutting property owners;
2. When the total width of all driveways serving a property exceeds 50% of the curb line frontage;
3. Within 50 feet of the rights-of-way line of an intersecting non-arterial street;
4. Within 100 feet of the rights-of-way line of an intersecting arterial street;
5. Within 100 feet of an approved median opening location on an arterial street;
6. Less than the minimum spacing as established under Section 5-3.201;
7. When adequate sight distance cannot be provided to vehicles on the driveway attempting to access the street (see Figure 5.3-26 and Appendices 5-3A and 5-3B).

5-3.203 PROTECTION OF ACCESS

For proper control of driveway access, a vehicular non-access easement (V.N.E.) is to be granted to the city, except at approved access points, along all collector and arterial streets when abutting property develops.

5-3.204 RESIDENTIAL DEVELOPMENT DRIVEWAYS

A. Single Family Residential Development

Driveways serving single-family residential units should be S-1 type driveways as shown in Figure 5.3-37. Only one driveway per lot street frontage is allowed except where the street frontage is of sufficient length to maintain a separation of 50 feet between driveways. The minimum driveway length is 18 feet, measured from the face of the garage opening to the back of sidewalk or the back of curb if no sidewalk is provided. See Section 2-2.308 for additional discussion on driveways.

B. Multi-Family Residential Development

Driveways serving multi-family residential units should be CL and CH type driveways, as shown in Figures 5.3-38 through 5.3-41. Type CL-1 and CL-2 are low-volume driveways to be used on local streets. Type CH-1, -2 and -3 are high volume driveways to be used on collector and arterial streets. The minimum driveway length is 50 feet, measured from the entrance to the off-street parking area to the back of sidewalk, or to the back of curb if no sidewalk is provided.

C. Limitations on Residential Access

Residential properties that have frontage on a local street, an arterial, or collector street are limited to local street access.

In some instances, residential parcels fronting only on arterial or collector streets may be given access if alternate public access is not available. When such access is allowed, the driveway must be circular or it must have a turn-around area to ensure there is no need for backing onto the street.

5-3.205 COMMERCIAL AND INDUSTRIAL DEVELOPMENT DRIVEWAYS

Driveways for commercial and industrial development are shown on Figures 5.3-38 through 5.3-43. The minimum length for a commercial or industrial driveway is 50 feet, measured from the entrance to the off-street parking area to the back of sidewalk or the back of curb if no sidewalk is provided.

A. Commercial Driveways

The "CL" and "CH" type driveways are designed to serve commercial properties. A "CL" type driveway is used for low-volume driveways on low volume streets. A "CH" type driveway is used for driveways on arterials, major collectors, and high volume minor collectors, or at other locations when required by the Transportation Department. The CH-2 and CH-3 driveways are used at all access driveways opposite median openings.

B. Industrial Driveways

The CL-1 and CH-1 type driveways are typically used to serve industrial properties. Normally industrial access is not permitted on arterial or major collector streets; however, if such access is allowed, commercial driveway standards apply.

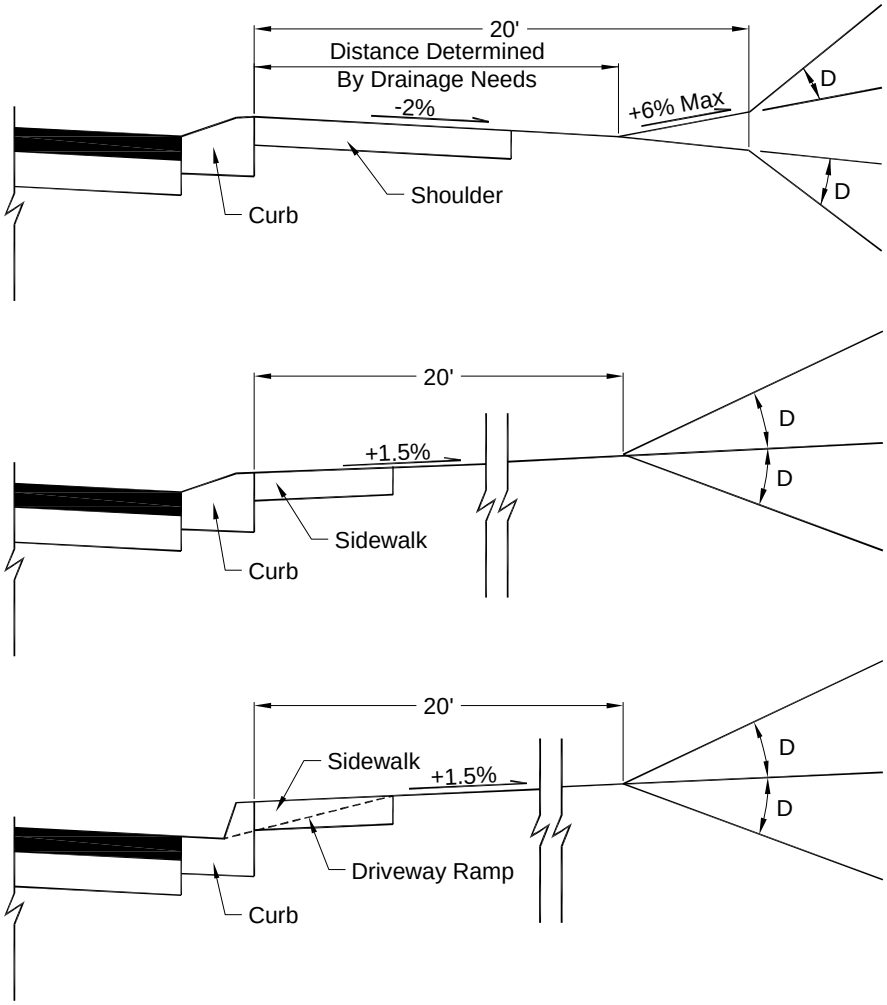

A.D.T. For Driveway		Grade Difference, D	
		Desirable	Maximum
Low Volume	1-500	6%	10%
Medium Volume	500-1500	3%	10%
High Volume	1500 or More	0%	10%

FIGURE 5.3-36. DRIVEWAY GRADE STANDARDS

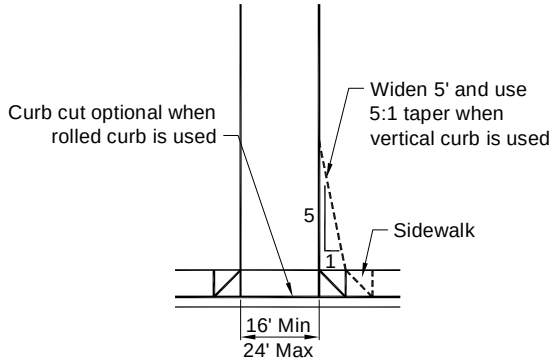

Surban Single Family Unit

NOTE: See COS Standard Details for more specific information.

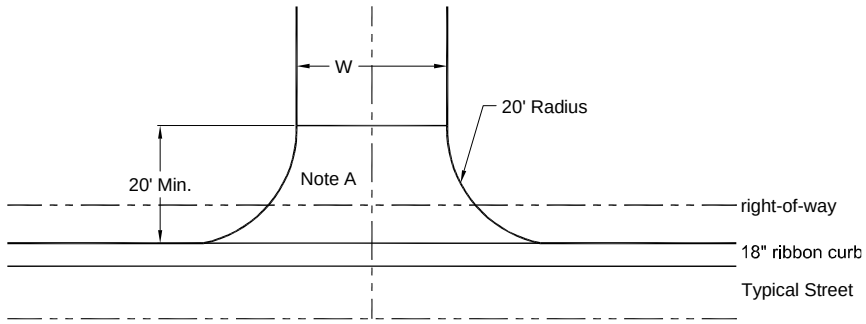

Rural/ESL Single Family Unit

- W=16' for driveway serving one lot
- W=24' for driveway serving two lots
- Note A: Pavement section-2" A.C/6" A.B.C. Minimum

FIGURE 5.3-37. TYPE S-1 DRIVEWAY STANDARDS

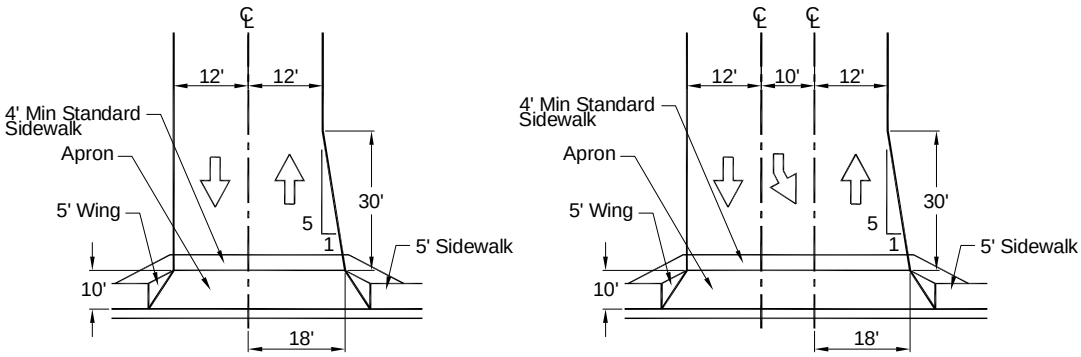

Two Way
CL-1

Two Way-Two Egress Lanes
CL-2

FIGURE 5.3-38. TYPE CL TWO WAY DRIVEWAYS

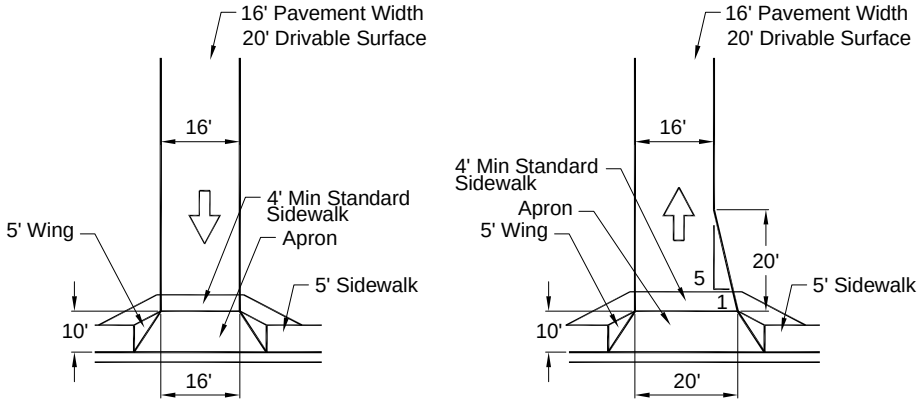

One Way Egress
CL-4

One Way Ingress
CL-3

FIGURE 5.3-39. TYPE CL ONE WAY DRIVEWAYS

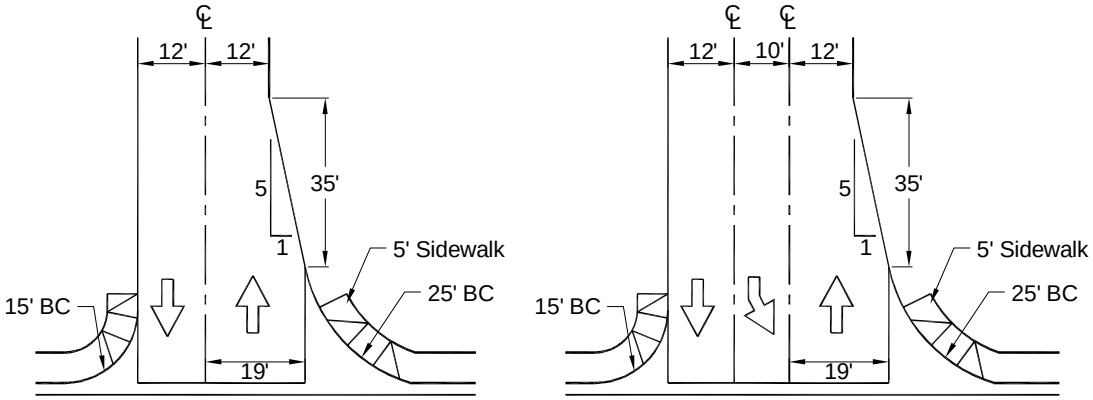

Two Way
CH-1

Two Way with Two Egress Lanes
CH-2

FIGURE 5.3-40. TYPE CH TWO WAY DRIVEWAYS

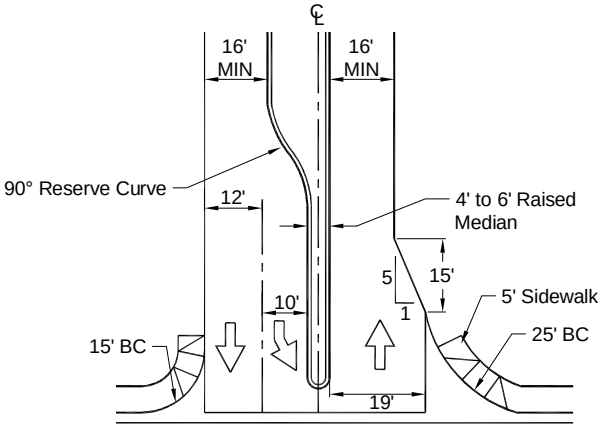

Two Way Raised Median
CH-3

FIGURE 5.3-41. TYPE CH TWO WAY DRIVEWAYS WITH RAISED MEDIAN

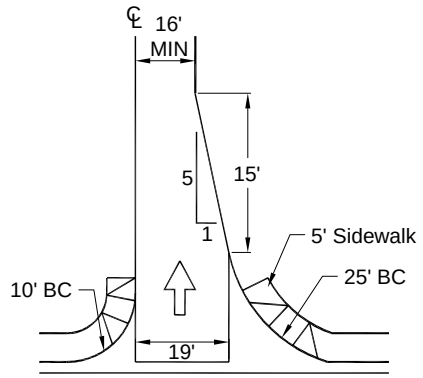

One Way Ingress
CI-1

FIGURE 5.3-42. TYPE CI ONE WAY INGRESS DRIVEWAYS

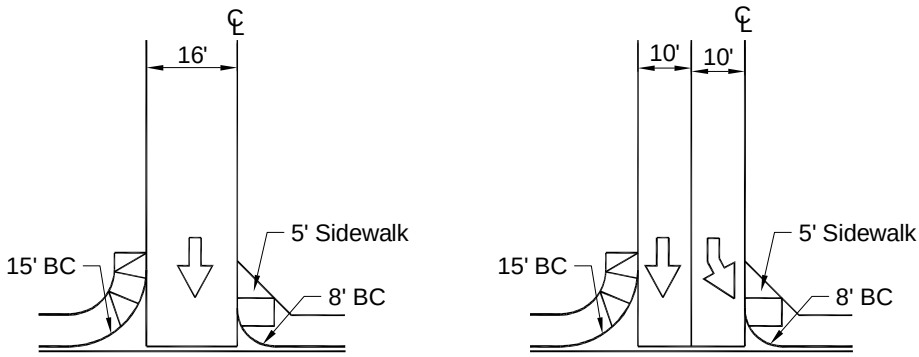

One Way Egress
CI-2

Two Lane, One Way Egress
CI-3

FIGURE 5.3-43. TYPE CI ONE WAY EGRESS DRIVEWAYS

5-3.206 DECELERATION LANES

Figure 5.3-28 and 5.3-29 depict the design standards for auxiliary lanes. These standards apply for right and left turn lanes at street intersections and for deceleration lanes at mid-block driveways. The requirement for an auxiliary lane may necessitate additional rights-of-way. The standard storage length for a deceleration lane is 150 feet, with a 100-foot minimum length. Modifications to the design standard are allowed by the Transportation Department where the conditions do not allow the full taper or storage length.

Deceleration lanes are required at all new driveways on major arterials and at new commercial/retail driveways minor arterials. Deceleration lanes for driveways may also be required on collector streets and for non-commercial/retail driveways on minor arterials. The lane length should be based on the distance needed to allow the vehicle to exit the through lane and slow to a 15 mph travel speed. To determine the need for a deceleration lane on streets classified as a minor arterial or collector, refer to the following criteria:

- At least 5,000 vehicles per day are expected to use the street;
- The 85th percentile traffic speed on the street is at least 35 mph; or 45 mph for a two lane (one lane each direction) roadway;
- At least 30 vehicles will make right turns into the driveway during a one-hour period.

SIDEWALKS

5-3.300

A. Sidewalk Standards

Sidewalks adjacent to all city streets are required to meet the standard cross sections contained in Figures 5.3-1 through 5.3-21 and the Streets Master Plan except as noted below. Generally a minimum eight-foot sidewalk width is required along all major streets (major collector classification or greater); a six-foot wide sidewalk width is required along all minor streets. The sidewalk should be separated from the back of curb a minimum of 4 feet, with 8 feet being typical, and greater separation desirable based on available rights-of-way. Sidewalk separation is required along all streets except local streets (local residential, local collector, local commercial/industrial). Sidewalks may be located at the back of curb in urban area where additional sidewalk width is provided. Refer to the Pedestrian Facilities Section 5-8 for more detail regarding sidewalk design and requirements.

B. Sidewalk Exemptions

Sidewalks will be provided on all streets except under any of the following conditions:

1. Along local residential streets in rural, low density areas -- lot widths are 150 feet or more or parcels are 20,000 square feet or more on both sides – where improved shoulders are provided along both sides of the street.
2. Along the side of a street where a multi-use path is required. (The multi-use path will also serve as a sidewalk.)
3. In the outer separation between an arterial street and a frontage road.
4. With the approval of the Development Review Board, in an area that has been substantially developed without sidewalks and a required sidewalk would create a spot location.

BRIDGES, RETAINING WALLS, & STRUCTURAL CLEARANCES

5-3.400

BRIDGES

5-3.401

A. Bridge Roadbed Width

The clear width of all bridges, including grade separation structures, needs to equal the full width of the physical improvements consisting of sidewalk, street, median, and curb and gutter.

B. Approach Guardrail

If a vehicular railing or safety-shaped barrier is within 10 feet of a traveled way with or without a sidewalk, approach guardrails are to be installed on all approach ends in accordance with AASHTO guidelines and Paragraph 5-3.401.E below.

C. Cross Slope

The crown is normally centered on the bridge except for one-way bridges, where a straight cross slope in one direction is used. The cross slope needs to be the same as for the approach pavement.

D. Median

On multi-lane divided highways, a bridge median that is 26 feet wide or less needs to be decked. The decking of all medians greater than 6 feet wide needs to be grated to allow natural light into the structure. Exceptions must be submitted to the Transportation Department for approval.

E. Railings

The railings to be used are the State of Arizona or State of California Department of Transportation standard design railings. There are four types of railings, which are described below:

1. Vehicular Barrier Railings
   The primary function of these railings is to retain and redirect errant vehicles.
2. Combination Vehicular and Pedestrian Railings
   These railings perform the dual function of retaining both vehicles and pedestrians on the bridge. They consist of two parts:
   a. A concrete barrier railing with a sidewalk, and
   b. A metal hand railing or fence-type railing.
3. Pedestrian Railings
   These railings prevent pedestrians from accidentally falling from the structure and, in the case of the fence-type railing, prevent objects from being thrown to the roadway below the bridge.
4. Bridge Approach Railings
   Approach railings are required at the ends of bridge railings exposed to approach traffic. On divided highways, with separate one-way traffic structures, they need to be placed to the left and right of approach traffic.
   a. On two-way roadbeds with a clear width less than 60 feet across the structure, approach railings need to be placed on both sides of the structure.
   b. When the clear width is 60 feet or more, approach railings need to be placed only to the right of approach traffic.
   c. Several types of approach railings are available, including Metal Beam Guardrail, Bridge Approach Guardrail (Types I and II), and Safety-Shape Barriers. The type of approach railing selected should match the rail to be used on the bridge. When long runs of guardrail (such as embankment guardrail) precede the bridge, the guardrail should connect to the bridge railing to serve the approach railing function.
   d. Approach railings need to be flared at their exposed end. The greatest flare offset possible should be used commensurate with the approach roadway. For detailed information, refer to the AASHTO publication, **Roadside Design Guide.**

5-3.402 RETAINING WALLS

A. Types and Uses

Recommended types of retaining walls include reinforced concrete and structural masonry. Heavy timber construction is not encouraged except when approved by the Transportation Department General Manager. The walls need to include integral attachments for railings and weep drainage where applicable.

B. Aesthetic Considerations

In general, the materials and design of retaining walls need to match or blend with the adjacent natural features, landscaping, and/or buildings. The surface of the retaining wall should have a low light reflectance. Suggested surface treatments include exposed aggregate, stucco or mortar wash, and native stone, or other surfaces as approved by the Development Review Board.

The height of retaining walls within city rights-of-way cannot exceed 6 feet except when approved by the Transportation Department General Manager. If approved to retain above 6 feet, terracing is encouraged and the length of the alignment of the retaining walls should be foreshortened by vertical grooves, periodic offsets, and height changes, or other configurations as approved by the Development Review Board. Refer to Chapter 2, Site Planning, for more information.

C. Safety Railings

A safety railing is required on or adjacent to vertical faces such as retaining walls, wing-walls, abutments, etc., and where the vertical fall is 2 feet or more. The safety railing needs to be constructed per city of Scottsdale standard details and placed on top of the vertical face structure of the vertical drop.

STRUCTURAL CLEARANCES 5-3.403

A. Horizontal Clearance

1. A fixed object other than street lights, signal poles and utility poles, and traffic control devices should not be located within 10 feet of the traveled way unless approved by the Transportation Department and/or a safety barrier is provided. A lesser clearance may only be allowed in more urban areas on streets with slower speeds or when other controls make the desired clearance unreasonable and appropriate traffic barriers are installed. In no case shall a fixed object be allowed within 2 feet of a traveled way.
2. The horizontal clearance to bridge piers, abutments, headwalls, and retaining walls on all streets can be noless than 10 feet from the edge of the traveled way.
3. Drainage structures (pipes, box culverts, etc.) are to be extended to a distance of 10 feet from the edge of the travel way. A lesser clearance may only be allowed when rights-of-way limitations make the desired clearance unreasonable and appropriate traffic barriers are installed.

B. Vertical Clearance

Minimum vertical clearance shall be 16.5 feet over the entire width of the traveled way of an arterial street or major collector street. On other streets, the minimum shall be 14.5 feet. The Transportation Department General Manager must approve exceptions.

SIDE SLOPES 5-3.500

A. Side Slope Standards

Side slopes should be designed for functional effectiveness, ease of maintenance, and pleasing appearance. For areas greater than 10 feet back of curb, slopes of 4:1 or flatter will be provided. Steeper slopes may be approved in areas more than 30 feet back of curb when soils are not highly susceptible to erosion, or when a cut is not more than 4 feet. Consult the AASHTO publication, **Roadside Design Guide** for further details. The Development Review Board must review cuts or fills greater than 4 feet. Refer to Chapter 2, Site Planning, for more information.

B. Slope Rounding

The top of all cut slopes needs to be rounded where the material is other than solid rock. A layer of earth overlaying a rock cut also will be rounded. The top and bottoms of all fill slopes for, or adjacent to, a traveled way, sidewalk, or bicycle path also need to be rounded. Refer to the Site Planning Section of the Design Standards and Policies Manual for more information.

PARTIAL STREET IMPROVEMENT 5-3.600

A full street cross-section is required for interior streets of a development and a complete half-street cross-section for perimeter streets. However, if the street is a major arterial, four of the six lanes of the full street, or two of the three lanes of the half-street, may be required subject to rights-of-way availability. The determination as to whether the unimproved lanes will be on the outer edge of the cross-section or adjacent to the median location will be made on a case-by-case basis and approved by the Transportation Department.

5-3.700 CONSTRUCTION OF HALF-STREETS

A. Design of Cross-Section for Half-Streets

Half-street construction needs to consist of a minimum 24-foot wide pavement section for major streets (major collector classification or higher) and a 20-foot wide pavement section for minor streets (minor collector classification or lower). In the event half-street construction is to be provided, the engineer needs to design the full cross-section of the street. The plans need to include, in dashed lines, the half-street, which will be constructed in the future. The half street construction needs to provide adequate transitions and tapers to the adjoining roadways.

B. Joining Existing Street Pavement

The half-street is to be designed to match existing construction as much as possible unless doing so is likely to create an unsatisfactory condition. If changes are needed to correct conditions on an existing half-street in order to properly construct the other half of the street, the solutions must be developed with Transportation Department staff on a case-by-case basis. The plans for the new half-street must contain sufficient information on the profile and cross-sections of the existing street to demonstrate that the new construction will match the old construction and result in a full street with proper cross-sections.

C. Culverts Under Half-Streets

A culvert to be provided in conjunction with half-street construction must extend a minimum of 10 feet beyond the edge of the traveled way into the area where the other half of the street will be constructed in the future (subject to rights-of-way availability). The 10-foot distance is measured perpendicular to the street alignment. The culvert capacity, flow line slope, and alignment must be based upon the ultimate design requirements for the culvert if it were to be built under the full cross-section where it could be considerably longer.

5-3.800 PAVEMENT TRANSITIONS

When development causes the widening of a portion of the pavement of an existing road, pavement transitions are required at each end of the widened portion. Design of the various features of the transition between pavements of different widths should be consistent with the design standards of the superior facility. The transitions should be made on a tangent section whenever possible. Locations with horizontal and vertical sight distance restrictions should be avoided. Whenever feasible, the entire transition should be visible to the driver of a vehicle approaching the narrower section. Intersections at grade within the transition area should be avoided.

A. Transition to a Wider Pavement Section

A transition from a narrower cross-section to a wider cross-section needs to be a length that is five times the street design speed in miles per hour. See Figure 5.3-44.

B. Transition to a Narrower Pavement Section

A transition from a wider cross-section to a narrower cross-section needs to be a length equal to the difference of the two widths in feet times the street design speed in miles per hour, or the 85th percentile speed in miles per hour, whichever is greater. Figure 5.3-44 illustrates this requirement.

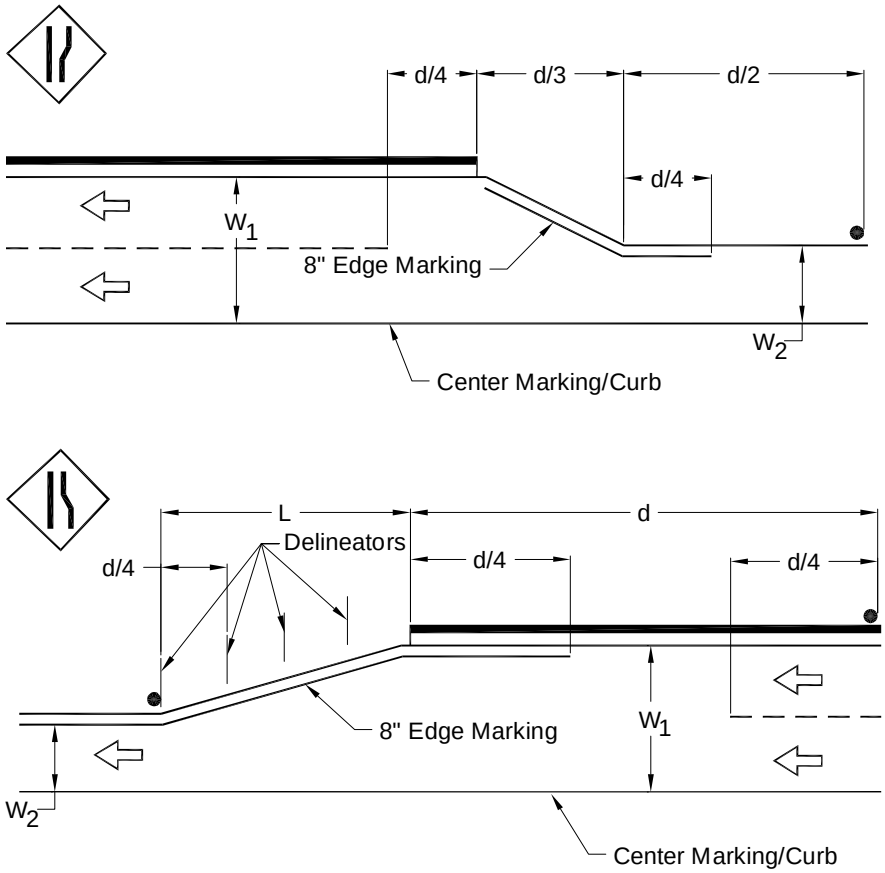

S = Design Speed or 85 Percentile Speed, whichever is higher

$W = W_1 - W_2$

L = WS

d = 15S

FIGURE 5.3-44. PAVEMENT WIDTH TRANSITIONS

FRONTAGE ROADS

5-3.900

Generally there are two types of frontage roads, those along freeways that provide commercial access, and those along arterials that provide residential access. The city of Scottsdale does not typically have jurisdiction over freeway frontage roads.

A. Freeway Frontage Road Access

Any proposed freeway frontage roads, or access to existing or planned frontage roads, should be coordinated with the city's Transportation Department and the Arizona Department of Transportation. The city must be consulted to ensure the frontage road, or access to such, does not have a detrimental impact on the adjacent city street system.

B. City Street Frontage Roads

New frontage roads for residential access are not encouraged and must be approved by the Transportation Department. Frontage road geometrics are to be based upon specific project requirements, but generally should not be less than 20 feet in width. Connections to the intersecting side street need to be out of the intersection influence area as outlined in the **Access Management Manual**.

5-3.1000 SUBDIVISION STREET PLANNING

Subdivision street plans should produce the minimum number of intersections and wash crossings, and discourage through traffic. Figure 5.3-45 illustrates a number of concepts associated with desired subdivision street design. The following paragraphs describe certain other concepts and requirements.

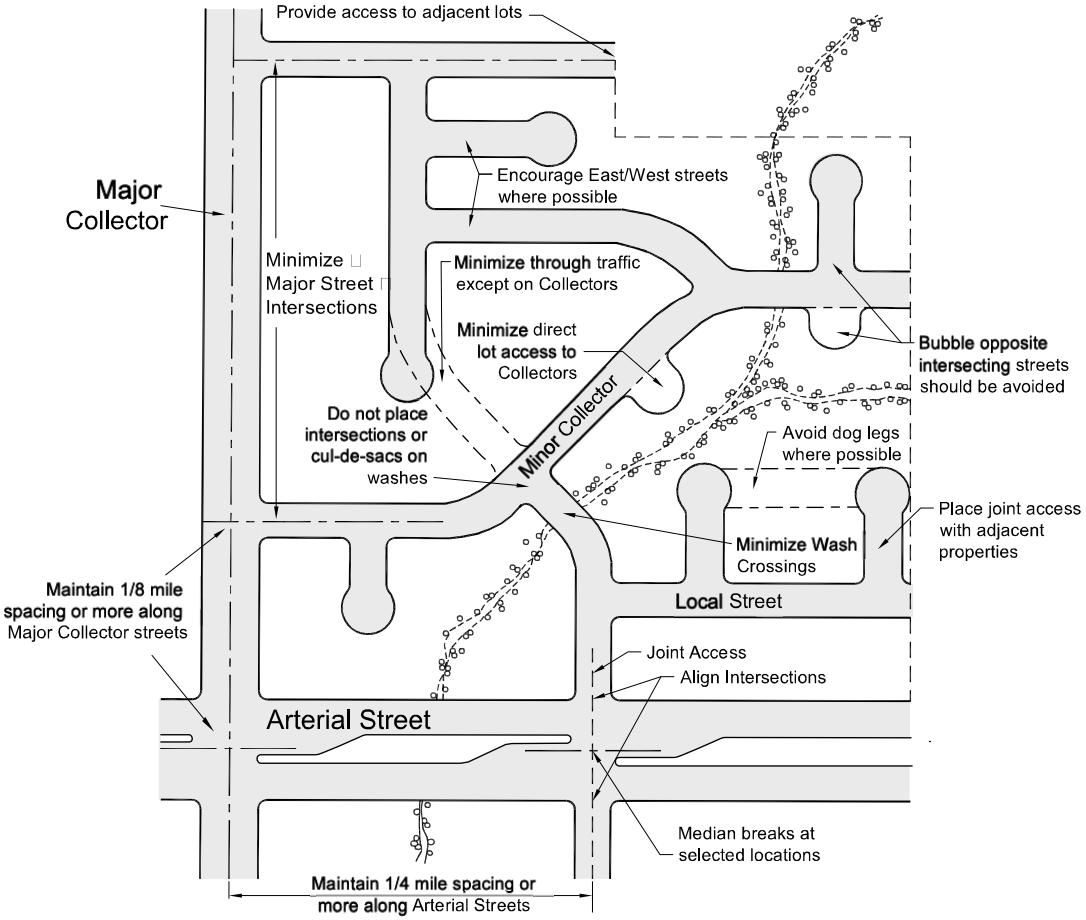

FIGURE 5.3-45. SUBDIVISION STREET PLANNING

A. Existing and Proposed Streets

Existing streets and proposed streets of the Mobility Element of the General Plan, the Streets Master Plan, or any applicable Master Circulation Plan or Area Plan should be incorporated into the design of new subdivisions. Exceptions must be approved by the Transportation Department and may require the approval of the Transportation Commission.

B. Street Abandonment

An existing public street may be abandoned if it is not a street indicated in the Mobility Element of the General Plan or an Area Plan, and if it will not eliminate reasonable access to existing adjacent properties. The abandonment should alleviate a significant traffic problem and not create a new problem. If a street abandonment is approved, the abandonment must occur prior to submitting a final plat to the City Council.

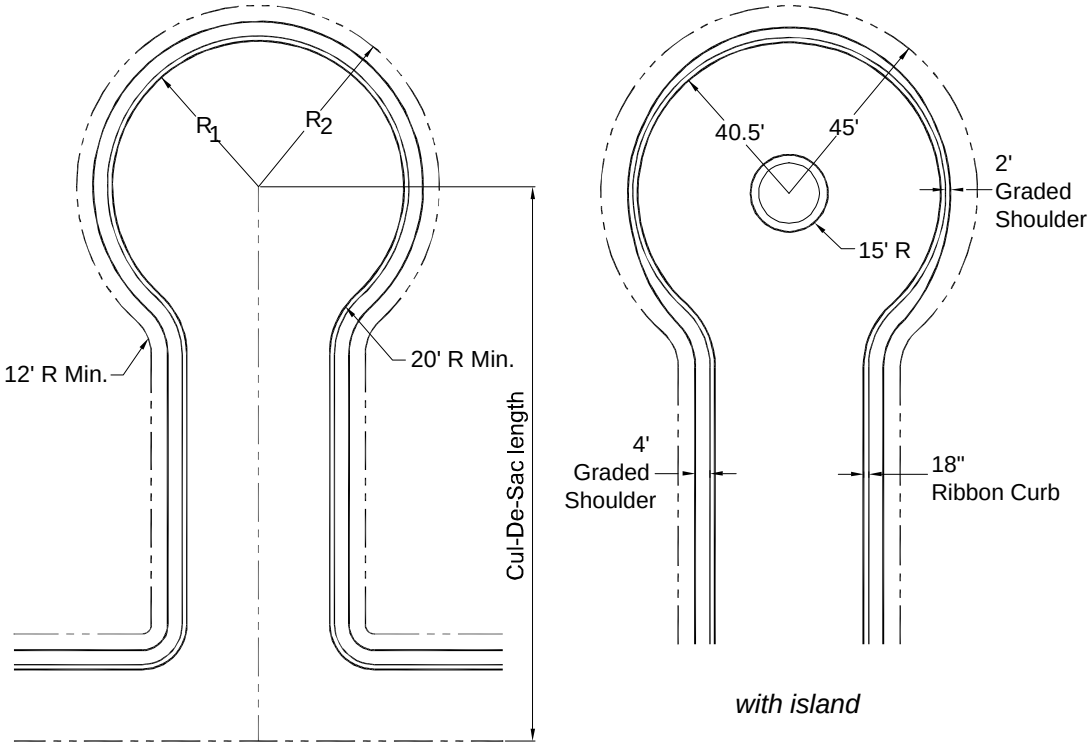

Classification of Cul-de-sac	Bubble Radii (ft)	
	R_1 (B.C.)	**R_2** (P.L.)
Local Residential	40.5	45
Local Commercial / Multi-Family Residential	60.5	70
Local Industrial	60.5	70

Minimum Length = 2R
Maximum Length = 1500 ft
ADT = 250 vpd maximum
Maximum number of units served = 25
Cul-de-sac radii are the same for private streets

FIGURE 5.3-46. CUL-DE-SAC STREET LENGTH

C. Cul-de-Sac Street Lengths

A cul-de-sac street is a street that serves more than one property owner and has only one direct access to the public street system. The following requirements apply to both public and private streets. The length of a cul-de-sac is measured between the centerline of an intersecting street and the radius point of the cul-de-sac, as shown in Figure 5.3-46; the minimum length of a cul-de-sac is two times radius R1, as illustrated. A cul-de-sac street cannot be longer than 1,500 feet and it cannot serve more than 25 single-family dwelling units; in these situations a secondary access may be required or the street may need to be upgraded to a collector level classification.

D. Dead-End Streets

Dead-end streets are required where a street connection is necessary to serve adjacent properties that will develop at a future date. When a dead-end street is required, a temporary cul-de-sac needs to be provided. A dead-end street may not exceed 150 feet in length without an approved turn-around.

E. Bubbles

Bubbles are areas on the roadway expanded to provide a turn-around and additional access or lot frontage on minor collector and local streets. Bubbles are required at intersections where each street extends in only one direction from the intersection. Bubbles are permitted between intersections to improve accessibility to odd-shaped sites, or on minor collector streets where direct access is not permitted. The bubble radii for local residential streets are shown on Figure 5.3-46 radii for cul-de-sac bubbles for other street classifications are shown in Figure 5.3-47.

The use of bubbles (except for on a cul-de-sac) on other than local residential streets must be approved by the Transportation Department. Radii appropriate for these bubbles will be established as part of that approval.

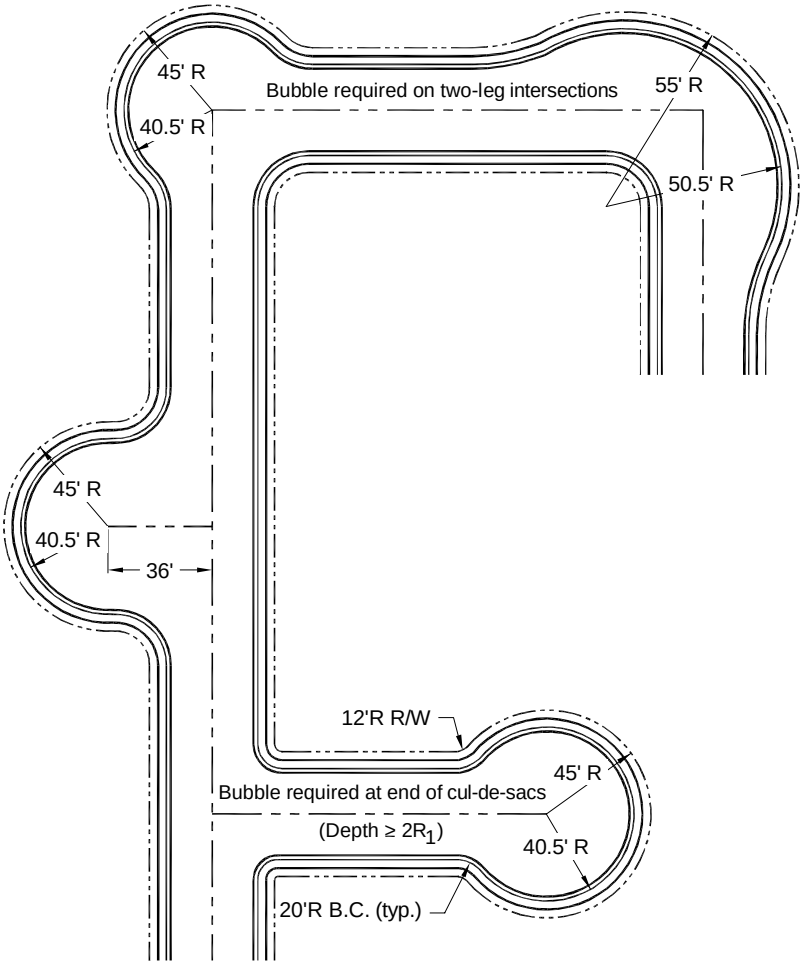

The bubble radii shown on this figure are for local residential streets. Radii for cul-de-sac bubbles for other street classifications are shown on Figure 5.3-46. The use of bubbles (except for a cul-de-sac) on other than local residential streets must be approved by the Transportation Department. Radii appropriate for these bubbles will be established as part of that approval.

FIGURE 5.3-47. BUBBLES FOR STREETS

F. Alleys

Alleys are discouraged and must be approved by the Transportation Department; however, alleys may be required where other alleys exist or where the extension of an existing alley or alley system is necessary. Dead-end alleys will not be permitted.

1. Alley Widths

Residential alleys abutting single-family uses need to be 16 feet in width. For other abutting uses, the alley provision is 20 feet in width.

2. Alley Intersections

Alley intersections and sharp changes in alignment should be avoided. When intersections or alignment changes are allowed, the inside corners need to be cut off on each side to provide a tangent section between the two sides at least 20 feet long, as shown in Figure 5.3-48.

3. Alley Paving

All alleys are to be fully paved with at least 2.5 inches of asphaltic concrete over 6 inches of A.B.C.

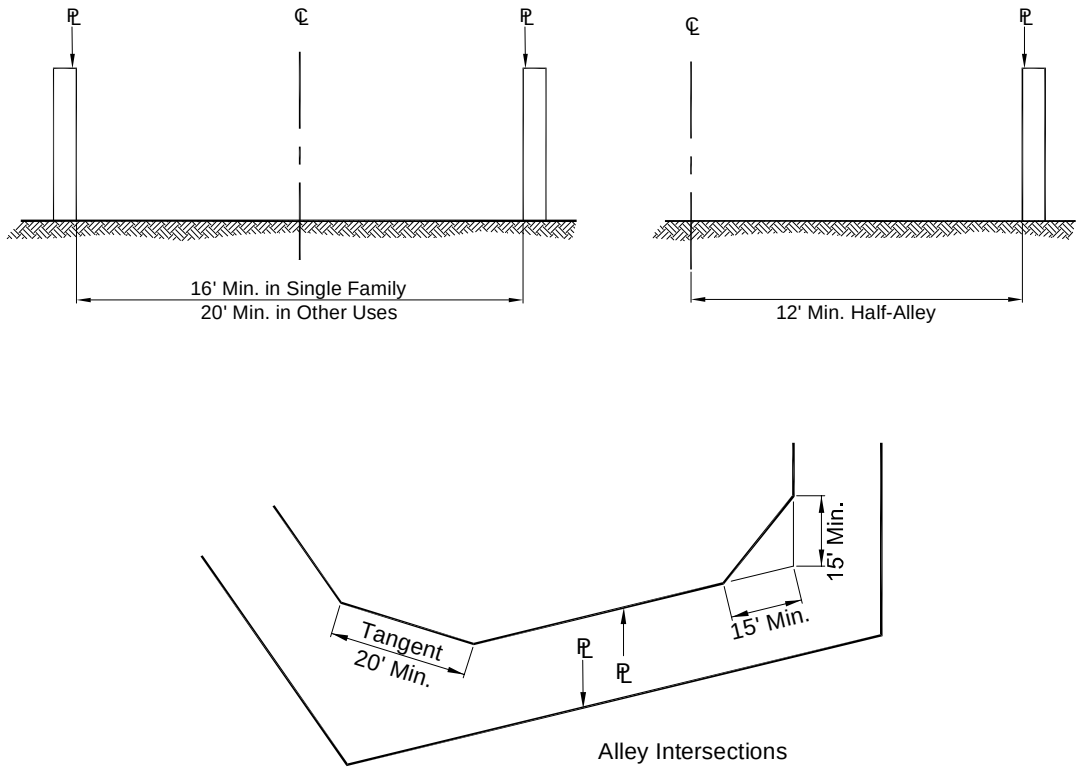

FIGURE 5.3-48. ALLEY WIDTHS AND INTERSECTIONS

G. Offset Intersections

Street jogs with centerline offsets less than 250 feet are not permitted along arterial and major collector streets, or on minor collector and local commercial and industrial streets where interlocking left turns will occur. Offsets as small as 125 feet are allowed on local residential streets and on minor collector and local commercial and industrial streets where interlocking left turns will not occur.

H. Intersecting Tangents

A tangent section of roadway is desirable prior to an intersection on a curvilinear street. Minor street intersections with major streets need to have a minimum tangent outside the intersecting rights-of-way. See Appendices 5-3A and 5-3B for design criteria.

5-3.1100 SPECIAL STANDARDS

A development may desire a special set of standards that differs from the city standards contained in this document. This request is typically made for master planned communities as part of their associated master circulation plan. In such a case, a qualified traffic engineer, registered in the State of Arizona, must prepare a preliminary and final traffic design report and secure city approval of the reports before plans incorporating the special standards can be submitted for review and approval.

A. Preliminary Design Report

A preliminary design report needs to be submitted prior to or at the time of preliminary plat submittal. At a minimum, the preliminary report must address the following subjects:

- Vehicle Trip Generation
- Traffic Control Device Requirements
- Pedestrian, Bicycle, and Equestrian Requirements
- Auxiliary and Additional Lane Requirements
- Special Features and their Influence
- Design Speeds
- Roadway Classification
- Parking Requirements
- Transit Facility Requirements
- Pavement Design

B. Final Design Report

A final design report needs to be submitted prior to or concurrently with the improvement plan submittal. The report must include a refinement of the preliminary design report and address the following subjects as a minimum:

- Horizontal and Vertical Alignment,
- Intersection Location,
- Traffic Control Devices,
- Treatment of Special Features.

C. City Review and Approval of Special Standards

The following factors will be considered by the city in its review of the report:

- Relationship of the proposed standards to National, State and city standards,
- Similarity of the proposed standards to standards utilized in other communities,
- Comparison of the proposed standards with alternatives,
- Sensitivity of the proposed standards to safety, environmental, and law enforcement concerns.

5-3.1200 ESL STREET STANDARDS

Streets that are constructed within the area designated as Environmentally Sensitive Lands (ESL) should be designed to minimize the impact on the adjacent topography and landscape. The following standards have been developed specifically for streets that are constructed within the ESL land areas, and vary from design standards for the non-ESL streets that are contained in the previous sections of this document. Additional information is contained in Appendix 5-3B and Section 2-2, Environmentally Sensitive Lands; Figure 2.2-1 depicts the areas within the city where these criteria apply.

A. Design Vehicle

For ESL areas, the basic design vehicle for all non-arterial streets is the Single Unit Truck as defined by AASHTO.

B. Horizontal Curves

Tangent sections between horizontal curves (compound or reverse) are not required for local residential streets in the ESL areas.

C. Street Grades

Longitudinal street grades within the ESL areas may range from 0.4 percent to 15 percent. In general, the maximum street grade should be 6 percent for major collectors and 9 percent for minor collectors and local residential streets. In areas with steep slopes and no alternative access provisions, steeper grades may be approved as shown in Figure 5.3-49. Lengths of flatter grades should break up steeper grades in order to provide a recovery area for emergency and service vehicles. Steeper grades may be approved in areas where it can be shown they would be less disruptive to the surrounding area, and emergency and service vehicle access can be maintained.

Street Classification	Maximum Grade
Major Collector	9%
Minor Collector	12%
Local Collector	12%
Local Residential	15%

Gradient	Maximum Grade Length
7 – 9%	1400 ft
9 – 12%	700 ft
12 – 15%	350 ft

FIGURE 5.3-49. STREET GRADES AND LENGTHS

D. Cross Slope

Cross slope should not exceed four percent. In ESL areas it may be necessary to use roadway cross slope to control drainage. Shoulder slopes should match the pavement cross slope.

E. Street Intersections

Right-angle intersections, those that intersect at an angle of 90 degrees, are the most desirable. They provide the shortest crossing distance and the best driver sight distance. Intersection angles that diverge by five degrees or more from 90 degrees are not allowed on minor collector or higher classified streets without approval from the Transportation Department. Local streets may have an angle divergence up to 15 percent at street intersections. If an intersection occurs along a curve, the side street centerline must be radial (no divergence) to the curve of the through street.

The minimum intersection spacing along local collector and local residential streets should be a minimum distance of 165 feet.

Design Specifications for Standard Suburban Streets

Street Design Element*	Major Arterial	Minor Arterial	Major Collector	Minor Collector	Local Collector	Local Residential	Local Commercial / Industrial
Full right-of-way width †	150	110	100	70	60	46	60
Pavement width † ‡	108	80	72	40	36	28	40
Median width - Curbed, Painted †	24C‡	16C‡ 12C Urban	12P	12P	12P	None	None
Type of Curb - Vertical, Rolled †	V	V	V	V	R	R	V
Design speed (mph)	55	55	45	35	30	20	20
Length of transition for 2% superelevation	320	210	210	135	150	150	150
Min radius of horizontal curve without superelevation	1800	1800	1100	650	450	200	200
Min radius of horizontal curve with 2% superelevation	1350	1350	850	500	350	150	150
Min length of tangent btwn reverse curves	300	300	250	200	150	100	100
Min length of tangent btwn curves in same direction	660	660	500	400	300	250	250
Max horizontal curve length	500	500	500	400	250	100	100
Stopping sight distance	500	500	365	225	200	125	125
Passing sight distance	1950	1950	1650	1300	1100	800	800
S_1 Intersection sight distance on drivers left for right turns, left turns and through traffic	650	610	500	325	300	190	355
S_2 Intersection sight distance on drivers right for left turns or straight through traffic	860	780	620	415	355	220	395
Min tangent length approaching intersection	300	300	250	200	150	100	100

* Unit of measure in ft unless otherwise noted.
† These first four design elements may vary for modified cross sections, such as the Urban Character streets, with approval from the Transportation Department.
‡ Measured from back of curb to back of curb.

Design Specifications for Standard Rural / ESL Streets

Street Design Element*	Major Arterial	Minor Arterial	Major Collector	Minor Collector	Local Collector	Local Residential
Full right-of-way width †	150	110	90	70	50	40
Pavement width † ‡	108	80	70	48	28	23-24
Median width - Curbed, Painted †	24C‡	16C‡	8C‡	8C‡	None	None
Type of Curb - Mountable, Rolled or Ribbon †	M, Ro or Ri	M, Ro, or Ri	M or Ro	Ro	Ro or RI	Ro or Ri
Design speed (mph)	55	55	45	35	30	20
Length of transition for 2% superelevation	320	210	210	135	150	150
Min radius of horizontal curve without superelevation	1800	1800	980	475	250	100
Min radius of horizontal curve with 2% superelevation	1350	1350	760	385	255	85
Min length of tangent btwn reverse curves	300	300	250	200	150	None
Min length of tangent btwn curves in same direction	660	660	500	400	300	250
Max horizontal curve length	500	500	500	400	250	100
Stopping sight distance	500	500	365	225	200	125
Passing sight distance	1950	1950	1650	1300	1100	800
S_1 Intersection sight distance on drivers left for right turns, left turns and through traffic	650	610	500	325	300	190
S_2 Intersection sight distance on drivers right for left turns or straight through traffic	860	780	620	415	355	220
Min tangent length approaching intersection	300	300	250	200	150	100

* Unit of measure in feet unless otherwise noted.

† These first four design elements may vary for modified cross sections, such as those that include trails within the right-of-way, with approval from the Transportation Department.

‡ Measured from back of curb to back of curb.

transportation

TRAFFIC SIGNAL DESIGN

5-4

This section presents the process and criteria for preparing traffic signal plans for the city. It identifies traffic signal design criteria, plan content, and equipment requirements and specifications.

Traffic Engineering
7447 E Indian School Road
Suite 205
480-312-7696

One Stop Shop
7447 E Indian School Road
Suite 100
480-312-2500

Plan Review
7447 E Indian School Road
Suite 105
480-312-7080

contents

Sections

5-4.000 General Information

5-4.100 Traffic Signal Design Criteria

5-4.200 Construction Plan Submittals

5-4.300 Traffic Signal Plan Content

5-4.400 Standard Traffic Signal Circuitry

5-4.500 General Requirements & Specifications

5-4.600 Traffic Signal Structures

Figures

5.4-1 Pedestrian Push Button Placard

5.4-2 Traffic Signal Approval Block

5.4-3 General Construction Notes Block

5.4-4 IMSA Cable 19-1, #14 AWG (Stranded) 20 Conductor

5.4-5 IMSA Cable 19-1, #14 AWG (Stranded) 4 & 7 Conductor

5.4-6 Directional Tape Color Code

TRAFFIC SIGNAL DESIGN

GENERAL INFORMATION

A. Scottsdale Traffic Signal Policies

The following policies have been adopted by the city of Scottsdale (COS) City Council. Requests to deviate from these policies must be submitted in writing to the Scottsdale Traffic Engineering Division for consideration.

1. Install warranted traffic signals to maintain one-half mile signal spacing on expressways, parkways, and major and minor arterials. Spacing must be consistent with the city's traffic control system plan.
2. Install warranted traffic signals to maintain one-quarter mile spacing on major collectors. Spacing must be consistent with the city's traffic control system plan.
3. Install warranted left-turn arrows based upon established city of Scottsdale criteria.
4. Require a complete traffic signal plan when a new traffic signal is to be constructed or when an existing signal, or any part of an existing signal, is to be modified in any way.
5. Require any traffic signal construction, private or public, to be supervised by one certified IMSA Level II Signal Technician and one IMSA Level I Signal Technician.

B. Reference Documents

The current version of the following publications, adopted by Arizona Department of Transportation (ADOT), is to be used in conjunction with the design criteria in this document.

- Manual on Uniform Traffic Control Devices For Streets and Highways - USDOT, FHWA
- Standard Specifications For Road and Bridge Construction And General Specifications For Traffic Signals and Highway Lighting - Construction Specifications, ADOT
- Traffic Signals and Lighting and Signing and Marking - Standard Drawings, ADOT
- Traffic Control Design Guidelines - ADOT
- Manual of Signs Approved for use on State Highway System - ADOT
- Traffic Engineering Policies, Guide and Procedure Manual - ADOT
- Informational Guide For Roadway Lighting - AASHTO
- Guide to Standardized Highway Lighting Pole Hardware - AASHTO
- Uniform Standard Specifications for Public Works Construction - MAG
- Uniform Standard Details for Public Works Construction - MAG
- COS Supplement to MAG Uniform Standard Specifications for Public Works Construction
- COS Supplement to MAG Uniform Standard Details for Public Works Construction
- COS Traffic Signal Special Requirements

C. Pre-Design Conference with Traffic Engineering Division

Prior to beginning traffic signal design, a pre-design conference may be requested by either Traffic Engineering or the design consultant.

D. Pre-Construction Conference with Traffic Signal Division

Prior to start of work, contractor shall contact COS Traffic Signal at 480-312-5635 to arrange a pre-construction conference.

5-4.100 TRAFFIC SIGNAL DESIGN CRITERIA

Refer to www.scottsdaleaz.gov/design/trafficsignalspecs.

All equipment and materials specified must be listed on the **COS Qualified Products List** (QPL) as shown in Appendix 5-4B, or include the required documentation to comply with the COS QPL and the traffic controller requirements shown in Appendix 5-4C. Items not on the Scottsdale QPL must be submitted for approval to Traffic Engineering Division, 30 working days prior to signal construction.

Scottsdale Intelligent Transportation Systems (ITS) designs are not listed in guidelines. However, reference to ITS special provisions, plans, or details may be called out on the signal plans for coordination requirements. To obtain ITS details and special provisions, the applicant must submit a separate plan and special provisions document to the Scottsdale Traffic Engineering Department, Traffic Management Center. For more information, call 480-312-2358.

5-4.101 SPECIFICATIONS/PROVISIONS

The COS "Boiler Plate" construction specifications need to be used. Traffic Engineering and/or the designer will determine the need for project-specific construction special provisions. Notes may be added to the construction plans if the designer feels that it is necessary to duplicate from these listed requirements.

5-4.102 SIGNAL STRUCTURES

1. Poles and foundations need to adhere to ADOT's **Traffic Signals and Lighting**– Standard Drawings, ADOT Standard Specifications for Road and Bridge Construction, and must meet the COS QPL.
2. The preferred configuration of poles is one pole per corner, located at the center of the curb return, at the back edge of the sidewalk. A sufficient pedestrian landing meeting the MAG Supplement and Americans with Disabilities Act (ADA) requirements must be provided. Situations requiring multiple poles per corner, or poles (traffic signal or pedestrian) within medians should be discussed with Traffic Engineering.
3. Traffic signal installations along the east and west couplet require trombone style poles and mast arms.
4. Combination poles, bracket arms, mast arms, bases, and foundation entrance conduit need to be included on the traffic signal plan.

5-4.103 SIGNALS

1. All design elements must comply with **Manual on Uniform Traffic Control Devices** (MUTCD) standards unless directed otherwise by Traffic Engineering.
2. Twelve-inch signal faces are required for all through indications and for all left-turn indications. Eight-inch signal faces will not be used. Refer to Figure 5.4-1.
3. Typically, a minimum of three heads is required for control of a through movement (one overhead mount and two far-side, side-mounts – left and right). Typically, a minimum of two heads is required for control of other movements. The overhead indications need to be centered on the lane lines to increase sight distance.
4. Typically, a minimum of two heads is required to control a left-turn movement. One head shall be overhead-mounted on the mast arm containing the heads that control the

corresponding through movement (or median mounted if the median width is greater than 6 feet), and the other head shall be side-mounted or pole- mounted on the far-side left corner facing the corresponding through movement.

5. One mast, arm-mounted signal head is required for freeway off-ramp terminals.
6. All indications shall be wide-angle LED type lamps. All pedestrian indications shall also be LED type lamps. LEDS shall be model 430-1315 or approved equivalent.

   Wattage is as follows:

12” red ball = 15 watts	12” Yellow ball = 15 watts	12” green ball = 11 watts
12” red arrow = 9 watts	12” yellow arrow = 9 watts	12” green arrow = 11 watts
16” pedestrian man/hand signal module = 11 watts		

   Questions regarding indication type should be directed to Field Services, 480-312-5634.

7. Fiber optic indications cannot be used unless directed otherwise by Traffic Engineering. All ITS elements, existing or new, will require a meeting with Traffic Engineering to discuss design requirements and special provisions.
8. Either aluminum or polycarbonate signal heads may be used with glass lenses only.
9. Heads and mounting brackets shall be black.
10. Back plates and tunnel visors shall be installed on all signal faces and need to be black.
11. Base-mount mounting height of 4 and 5 section heads should be adjusted to avoid conflict with mast arm. The aiming of the head cannot conflict with the mast arm or mast arm connection. (These side-mount heads should be mounted on the backside of the pole, at a 45-degree angle, and at a height of 115 inches.)
12. A maximum of three heads may be installed on a mast arm that is 40 feet in length or less. A maximum of four heads may be installed on a mast arm that is 45 feet in length or longer. (A mast arm that is 40 feet in length or less needs to include a minimum of three tenons. A mast arm that is 45 feet in length or greater needs to include a minimum of four tenons.) All mast arms tenons shall be installed at 12’ intervals, with the outboard (left) tenon at 14’ from the first inboard tenon.
13. Traffic Engineering must approve the use and placement of right-turn arrow heads. Right turn heads need to be modified four-section “G” heads.

STANDARD SIGNAL FACES

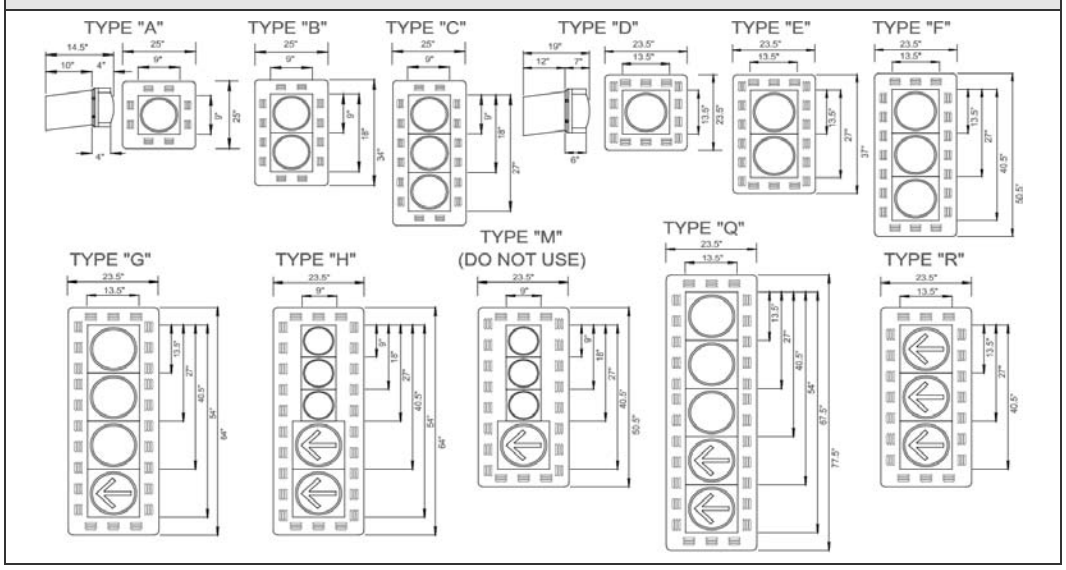

FIGURE 5.4-1. STANDARD SIGNAL FACES

MOUNTING ASSEMBLIES

Type	Plan Symbol	Ref.
I II	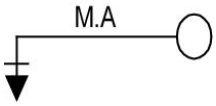	ADOT T.S. 9-1
III	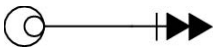	ADOT T.S. 9-2
IV	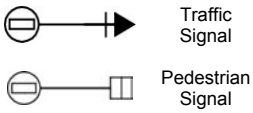	ADOT T.S. 9-2
V	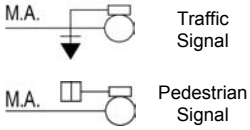	ADOT T.S. 9-3
VI	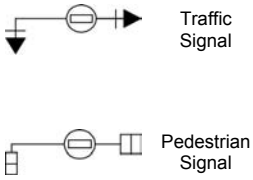	ADOT T.S. 9-4
VII	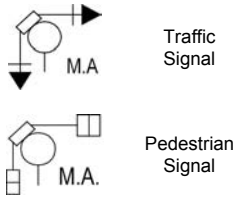	ADOT T.S. 9-5
VIII	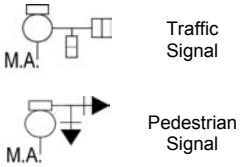	ADOT T.S. 9-6
IX	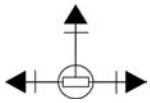	ADOT T.S. 9-7
X	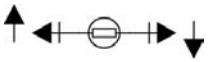	ADOT T.S. 9-8
XI **do not use**	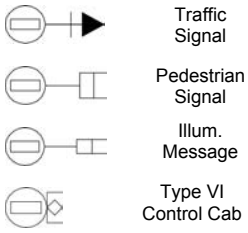	ADOT T.S. 9-9

FIGURE 5.4-2. MOUNTING ASSEMBLIES PLAN SYMBOLS

14. ADOT type eleven (XI) mounting hardware will not be used in Scottsdale signal designs (see Figure 5.4-2).
15. Modified four-section “G” heads must be used instead of 5-section “Q” heads for all locations where permitted/protected left turn phasing is designed (see Figure 5.4-1).
16. All hardware shall be mounted on pole “backside at 45 degrees” or per COS Traffic Signal Inspector requirements.

5-4.104 PEDESTRIAN SIGNALS

1. Pedestrian signals should be installed at ALL intersections unless directed otherwise by the Traffic Engineering Division.
2. Pedestrian push buttons should be installed for ALL directions unless directed otherwise by the Traffic Engineering Division.
3. Pedestrian push buttons shall meet ADA requirements. (All traffic signal poles with pedestrian push button assemblies need to be wheel chair accessible. Provide a four-foot-wide concrete access ramp and landing per ADA requirements to poles that are not

placed immediately adjacent to sidewalks. Mount pedestrian push-button assemblies no higher than 42 inches above the adjacent sidewalk or ramp elevation.) Where two buttons are mounted on one pole, the lower button needs to have a placard below the button.

4. Use the ADOT pedestrian push-button post when necessary in accordance with the MUTCD.
5. Pedestrian signals must be 16 inch LED “Man/Hand” indication and have bottom hinges.
6. The required pedestrian push button placard design, as shown in Figure 5.4-3, needs to be included in the design. Contact Field Services Division at 480-312-5635 for details.

FIGURE 5.4-3. PEDESTRIAN PUSH BUTTON PLACARD

CONTROLLER 5-4.105

1. The Controller shall be a 170ATC/HC11 system unless otherwise directed by the Traffic Engineering Division.
2. The Controller input rack needs to be wired as shown in the MAG Supplement, COS Standard Detail 2140.

CONTROLLER CABINET 5-4.106

The controller cabinet must be model 330 with extender base and access panel, unless otherwise directed by the Traffic Engineering Division. Intersections with ITS cameras may require an additional communications cabinet, or a combined 332 cabinet. Traffic Engineering Division must review and approve all cabinets prior to installation.

Typically, the cabinet shall be located on the same corner as the power cabinet, usually on the corner closest to the power source as specified by the power provider. To the extent possible, the cabinet should be shielded and protected from the threat of errant vehicles. The cabinet should be positioned so as to allow a technician working within the cabinet, a clear view of the intersection under control.

The cabinet foundation dimensions need to be 30 inch x 30 inch, project 6 to 8 inches above the adjacent (ultimate) ground elevation, and extend 32 to 36 inches below the adjacent (ultimate) ground elevation. See COS Standard Detail 2139 for Traffic Signal Controller Cabinet Base Extender. A Tech Pad needs to be installed in front of the cabinet with the dimensions of 30 inch x 36 inch x 4 inch. Installation of an 8’ x 5/8 inch copper ground rod needs to be installed in the cabinet using 1 inch PVC conduit.

A. Electric Service Cabinet

1. The electric service cabinet needs to be MEYERS model MEUG16-100TB (dual) or approved equivalent unless otherwise directed by the Traffic Engineering Division. The electric service cabinet must include the following: lightning arrest (ground rod), photocell receptacle rated for 20 amps or more, sub-breakers, and test/auto switch. Mount a permanently affixed metal address tag on the front side underneath the meter window. Photo cell shall be oriented in the North direction.
2. Install a #7 pull box adjacent to the electric service cabinet. Also, install a power run from the pull box to the cabinet. Power run design shall be per utility company requirements.
3. When the power source is an overhead power drop, use a 2-inch galvanized conduit shall be used above ground and through the first underground sweep. Power run design shall be pre utility company requirements.
4. The cabinet foundation should have dimensions of 30 inch x 30 inch and project 6 to 8 inches above the adjacent (ultimate) ground elevation. Extend the cabinet foundation 32 to 36 inches below the adjacent (ultimate) ground elevation. Install a tech pad in front of the cabinet with dimensions of 30 inch x 36 inch x 4. inch Locate the service cabinet no closer than 10' from the traffic signal control cabinet (edge to edge).
5. Permanently attach the service address to the electric service cabinet.

B. Loop Detectors

1. All loop detectors shall be wire-in-duct type wire. (Orange Jacketed Detect-a-Duct or approved equivalent, #14 stranded inside a ¼ inch PVC tubing.) IMSA 51-5.
2. Center all loop detectors in the middle of the applicable traffic lane. Loops must be sufficiently dimensioned on the plans. Extend loop detectors 5 feet into the crosswalk unless directed otherwise by the Traffic Engineering Division.
3. Use a rectangular loop with 3 turns (6 feet x 40 feet) for all through lanes.
4. Use a quadrapole loop with 2 outside turns and 4 inside turns (6 feet x 40 feet) in all exclusive left-turn lanes. (Wire in middle cut shall run the same direction.)
5. Do not install loop detectors in exclusive right turn lanes unless directed by the Traffic Engineering Division.
6. Locate permanent count detector loops only as specified by the Traffic Engineering Division. Count detector loops shall consist of a minimum 4 turns (6 feet x 6 feet).
7. Pre-formed loop detectors (conforming to the latest ADOT specification) shall be used under decorative pavement, pavers, concrete, or other special roadway surfaces, or as directed by the Traffic Engineering Division. Do not splice lead-in cable between the loop and the cabinet.
8. Lead-in cable between loop wire and controller shall meet IMSA 50-2, 14 awg specification or approved equivalent. Lead-in shall be continuous back to controller.
9. Twist loop lead-in and splices in pull box a minimum 8-10 turns per foot, and solder. Use only Griggs Loop Detector Sealant, 3-M Loop Sealant, or approved equivalent.
10. Install loops prior to installing the final pavement lift (if part of a paving project).
11. Prior to city acceptance, the contractor must inspect and test loops, per ADOT test requirements, in the presence of the Traffic Inspector.
12. Contractor is responsible for layout of all loop detectors.

C. Conductors

1. IMSA 19-1 stranded cable shall be used for all signal and pedestrian conductors. Two cables shall be installed in all street crossings and in the cabinet home run. Pole/mast arm runs require seven conductor and four conductor cables. Install the 7 conductor cables on the outboard mast arm mounted head and all side mount heads.

2. Signal pole and conduit grounding wire shall be #8, solid bare copper wire.
3. Belden 9418 or approved equivalent loop lead-ins shall be used between telephone drop point and the controller. IMSA 50-2 or approved equivalent shall be used between detector- loop pull box and the controller shall be continuous back to control cabinet.
4. Opticom model 138 detector cable shall be used for emergency vehicle pre-emption. Do not splice 138 detector wire between pole connection and cabinet termination.
5. Re-pull completely with new wire and remove old wire if any existing conduit run is disturbed. The use of wire pulling lubricant is required in all conduits. Install pull strap in every conduit run.
6. Do not splice wires except in pull boxes, terminal compartments, control cabinet, and electric service cabinet. Twist wire splices prior to installing wire nuts. Dip all splices in 3M Scotch Kote, or approved equivalent, a minimum of two times to eliminate any air bubbles. Fill 100% with sealer any wire nut. Solder all pull box loop detector connections. Twist loop wire to first pull box a minimum of 8-10 turns per foot prior to soldering to lead-in cable.
7. Where cables loop through pullboxes, they shall be marked with white tape to designate cable or cable two or appropriate phasing tape for other conductors. Conductors and cables shall have a minimum of 36” of slack in all pullboxes.
8. All future conduits and mast arm tenons shall have a pull strap installed.

D. Conduits

1. All conduits except telephone drops shall be 2 ½-inch with 2 conduits installed for all street crossings and pole runs. Conduit for telephone drops and loop stubouts shall be 2-inch; 2 additional 3 inch conduits are now required in pole foundations to later incorporate the installation of Cell Tower conductors if approved for installation.
2. Use galvanized conduit for exposed, above-ground runs through the first sweep below grade.
3. Place red warning tape in all conduit trenches, 12 inches below final grade, witnessed by the city’s traffic signal inspector.
4. Use Schedule 40 PVC, except for service runs above ground.
5. Avoid installing conduit in the medians, unless otherwise directed by Traffic Engineering.
6. Install loop stubout conduit for all approaches regardless of the requirement for loops. Loop stubout conduit shall be 2-inch.
7. Traffic signal conduit sweep radius shall be a minimum of 24 inch, and ITS conduit sweep radius shall be 36 inch minimum.

E. Pull Boxes

1. All pull boxes shall be concrete/fiber composite type and shall include minimum 8 inch extension on main pull box. All pull boxes require sump #57 rock, per ADOT standards.
2. Size all boxes in accordance with ADOT sized # 7 or ADOT sized # 5 as called for on the prints or as specified by the Traffic Signal Inspector. As a general rule, #5 boxes are to be used only for communication and end runs. All inside the horseshoe pull boxes and main pull boxes shall be sized # 7.
3. Do not place pull boxes in traveled roadways. Conduit must be extended where necessary to relocate pull box to a non-traveled area. However, if the conduit cannot maintain a straight route, install a new conduit run.
4. Use concrete pull boxes in sidewalks. Do not use fiber-composite boxes.
5. When possible, locate pull boxes adjacent to sidewalks rather than in the sidewalk.
6. Mark all traffic signal pull boxes "Traffic Signal" on the lid.
7. Use pull boxes at all corners and in island noses.

F. Lighting

Luminaries shall be provided on all signal poles unless there is a utility conflict or unless directed otherwise by the Traffic Engineering Division. Luminaire wire connections will only be made in pull boxes and not brought into the signal controller cabinet.

G. Emergency Vehicle Pre-Emption

1. Emergency vehicle pre-emption shall be used for all directions and at all locations, unless otherwise directed by the Traffic Engineering Division. Additional sensors may be necessary if approaches are offset or vision is obstructed. All receivers shall be 3-M model 721, dual sensor detectors.
2. Opticom model 138 detector cable shall be used for emergency vehicle pre-emption. Do not splice 138 detector wire between pole connection and cabinet termination.
3. Tape and color-code all Opticom detector cables.
4. Phase selector shall be 3-M Model 752.

H. Phasing Standard

1. The Traffic Engineering Division will determine all intersection phasing. Left-turn phasing will operate as lag-left unless otherwise directed by Traffic Engineering. Typical phasing standards are shown in Appendix 5-4A.
2. Corresponding permitted/protected left-turn phasing shall be wired together in the cabinet, and operate simultaneously to avoid the left-turn trap.
3. The signal controller must be wired by an IMSA Level 2 certified signal electrician.

I. Electrical Power

1. Contact the applicable power provider to determine source for traffic signal power and to coordinate applicable requirements.
2. Show the electrical service address on the signal plan. The address may be obtained from the COS, (One Stop Shop) Records Department, 480-312-2500.
3. The contractor must obtain an electrical service permit (No Fee) from the COS, One Stop Shop.

J. Traffic Signal System (Communications)

1. Interconnect all traffic signals to the COS Traffic Signal System by means of a 4-wire, conditioned telephone land-line, unless directed otherwise by the Traffic Engineering Division. Contact Traffic Engineering Division at 480-312-2358 for circuit number and other applicable information.
2. Contact the applicable communications provider to determine location for telephone drop and to coordinate applicable requirements.
3. Install a separate 2-inch conduit from the point of phone service (phone drop) to the nearest pull box. Belden 9418, or approved equivalent, shall be used for the telephone run.
4. Show the telephone service address on the signal plan. The address may be obtained from the communications provider or from COS Records Office.

K. Signing

All regulatory, warning and route marker signs shall be provided with the traffic signal installation and shall be in accordance with the **Manual on Uniform Traffic Control Devices**. Metro street name signs or LED lighted signs, as required, shall be installed on signal poles per COS criteria. See COS Standard Detail 2134-3.

L. Striping

All necessary striping shall be provided with the traffic signal installation and shall be in accordance with the Manual on Uniform Traffic Control Devices. Crosswalks shall be installed prior to the intersection being energized. See Section 5-5, Signs and Markings, for details.

M. Removal and Salvage

1. Keep all existing traffic signal equipment and streetlights in operation until new installations are operational.
2. Remove foundations to at least 36 inches below grade, or as directed by the COS inspector.
3. Keep all traffic signal approaches that have vehicle detection in operation during construction. Construction staging to avoid existing detectors or the installation of temporary detectors will be required to maintain detection during construction.
4. In most cases, the Traffic Engineering Division will require temporary detection to be installed in intersections that are being reconstructed, if normal detection cannot be restored in a timely manner.
5. Keep existing Telco in operation during construction.

CONSTRUCTION PLAN SUBMITTALS 5-4.200

Traffic signal plans shall be submitted to the One Stop Shop and must comply with all requirements of this manual. Two sets of Mylar signal plans are required to receive final project approval. One set will be approved and returned to the submitter; one set will be forwarded to the Traffic Engineering Division.

A final signal plan shall be submitted in Microstation format, Ver. 8, and must be submitted to the Traffic Engineering Division no later than 10 working days after final approval. All intersections shall be as-builted by the designer no later than 15 working days after the signal is turned on, and submitted to Traffic Engineering Division in the same Microstation format. Any changes reflected on the plans shall be X'd out, and new locations shown in bold.

TRAFFIC SIGNAL PLAN CONTENT 5-4.300

PLAN CONTENT 5-4.301

Traffic signal plans shall be developed in accordance with the requirements of Section 1-2, and conform to ADOT standard practices. As a general guide, the traffic signal plan layout shall be drawn at **1 inch = 20 feet scale**, and shall include the following items:

1. Locate and identify ALL existing and/or proposed improvements, above and below ground, within 200' of the intersection. INCLUDE ALL UTILITIES.
2. Locate and identify ALL existing and/or proposed pavement marking and signing, include turn-arrows for exclusive turn lanes.
3. Locate existing vegetation (trees, etc.), which could be in conflict with any proposed equipment locations or impact required signal visibility distances.
4. Provide a profile layout when vertical roadway alignment may impact traffic signal visibility requirements. (1 inch = 40' scale for profile is acceptable.)
5. Provide bearings for each leg of the intersection when deflection is greater than 2 degrees. Provide roadway curve data if applicable.

6. Locate all traffic signal equipment (poles, controller cabinet, electric service cabinet, telephone drop, etc.) by station and offset dimension.
7. All traffic signal poles, conduits and equipment must be located within public rights-of-way or easement.
8. Controller and cabinet must be type 170ATC/HC11 system with type 330 cabinet, with extension base and access panel.
9. Electric service cabinet shall be MYERS, MEUG16-100TB (dual), or approved equivalent. UPS, if specified, shall be US Traffic Powerback 2000 in 336 cabinet.
10. Designer shall coordinate the location of electric service with SRP or APS and provide detail on the plan with appropriate notes.
11. Provide address for electric service cabinet, available through COS Records Department.
12. Locate telephone drop and run conduit with communication cable back to signal controller. Provide address for telephone service, available through COS Records Department.
13. Provide emergency vehicle signal pre-emption, using 3M Opticom optical detectors model 721, and model 138 detector cable, or approved equivalent.
14. Provide phasing diagram for initial signal operation and ultimate 8-phase operation, unless directed otherwise by the Traffic Engineering Division. See Figure 5.4-4 for layout.
15. Provide conductor schedule indicating conduit run number, conduit size, wire type/size, phase, and any other pertinent information.
16. Details of any items not covered by standards.
17. All Q or R pole foundations will have two 2-½ inch PVC conduits leading to adjacent pull box, and 2- 3 inch conduits stubbed out of the foundation for future cell tower installation. All A, E, and F foundations shall have one 2-½ inch PVC conduit.
18. All plans must include a signal system number on the plan set. Contact 480-312-7935 to acquire the signal system number.
19. All plans must include the Traffic Signal Approval Block, as shown in Figure 5.4-4.

Date	Revision			By
Project Title				
Review By		Designed By		Drawn By
Date	As-Built Date	Bid No.	Scale	Sheet OF
Engineers Stamp		TRANSPORTATION DEPARTMENT TRAFFIC ENGINEERING 7447 E Indian School Road Scottsdale, AZ 85251		
TRAFFIC SIGNAL APPROVAL BLOCK				
Engineering Coordination Manager (or Designee)		Engineering Review		Traffic Engineering Director (or Designee)

FIGURE 5.4-4. TRAFFIC SIGNAL APPROVAL BLOCK

GENERAL NOTES

5-4.302

All traffic signal equipment and all construction in public rights-of-way or in easements granted for public use shall conform to:

- The Arizona Department of Transportation (ADOT) standard drawings and specifications,
- The Maricopa Association of Governments (MAG) Uniform Standard Specifications and Details for Public Works Construction,
- The COS Supplement to MAG Standard Specifications and Details for Public Works Construction, and
- The COS Traffic Signal requirements

Include the following General Notes (Figure 5.4-5) on all COS Traffic Signal Construction Plans. Also see Section 1.2, for additional notes that may also be required.

GENERAL CONSTRUCTION NOTES

1. Traffic control shall conform to the city of Phoenix Traffic Barricade Manual and/or as directed by the city Public Works Inspector.
2. Utility locations shown are based upon the best available information. The Contractor shall contact Blue Stake at 602-263-1100 before construction and verify actual utility locations.
3. Traffic signal poles, mast arms, and service cabinets shall be painted with 2 coats of white enamel paint meeting ADOT Specification Section #1002.
4. All pull boxes shall be ADOT standard type #7 as previously noted. The main pull box shall be an ADOT #7Ext., with 18 inch drainage, consisting of #57 rock, per ADOT spec.
5. A ground rod shall be installed within the customer side of the electrical service panel and in the control cabinet foundation, and a #4 bare bond conductor attached.
6. Pavement replacement shall conform to COS Standard Detail 2200 and 2001. Sidewalk replacement shall conform to MAG Standard Detail 230.
7. Metro Street Name Signs shall be installed on traffic signal mast arms per COS Supplement to MAG Specifications, Section 402.3.4, and COS Standard Detail 2134-3.
8. Applicable signal and pedestrian indications shall be wide angle LED type lamps in accordance with the COS Design Standards and Policies Manual.
9. Emergency Vehicle Pre-Emption shall be field-adjusted to optimize reception. All detectors shall be model 721 only.
10. All existing traffic control devices (including traffic detectors, Telco, and stop signs) and street lights shall remain in operation until new installations are energized and operational. Any traffic detectors disturbed during construction shall be replaced with temporary detectors until the final detection system is in place and operational. Any removed COS equipment shall be salvaged and returned to the COS Traffic Signal Shop at 9191 E. San Salvador (Scottsdale). All salvaged equipment shall be dismantled.
11. Questions concerning traffic signal design should be directed to the "Signal Designer, Address, Phone Number."
12. The electrical service address is: XXXXXXXXXX.
13. The Telephone drop address is: XXXXXXXXXX.
14. At START of construction the contractor shall contact the COS Signal Supervisor at 480-312-5635 to coordinate power authorization, cabinet set-up, inspection requirements and the pre-construction meeting. COS Traffic Signals shall be called 48 hours prior to all inspection points, as called for in the traffic signals special requirements as found in www.scottsdaleaz.gov/design/.
15. At START of construction the contractor shall contact the electric power provider to confirm power location and to schedule inspection.
16. At START of construction the contractor shall contact the telephone service provider to confirm telephone drop location and to schedule inspection.
17. The controller input rack shall be wired as shown in COS Standard Detail 2140.
18. All wires shall be color coded with tape as shown in COS Standard Detail 2141.
19. All signal foundations shall be flat, not dished or blocked/out. Foundations shall be no lower than back of sidewalk and/or 6-½ inch above the edge of the road and shall not be grouted.
20. All traffic signal poles, new, borrowed, or existing, shall be brought to "like new" condition, including unused holes welded, pole painted, wire upgraded to IMSA cable.

FIGURE 5.4-5. GENERAL CONSTRUCTION NOTES BLOCK

5-4.400 STANDARD TRAFFIC SIGNAL CIRCUITRY

A. Phase Color Coding

Each signal phase wire shall be coded with colored tape in the pull box as shown in COS Standard Detail 2141 and Figures 5.4-6 through 5.4-8.

20 CONDUCTOR IMSA CABLE				
Cable #1	Cable #2	Conductor Cable		Signal Interval
		Basic Color	Tracer Stripe	
Phase 1	Ph 5 OR Overlap A	Red	Solid	Red
		Orange	Solid	Yellow
		Green	Solid	Green
Phase 2	Ph 6 OR Overlap B	Red	Black	Red
		Orange	Black	Yellow
		Green	Black	Green
Phase 3	Ph 7 OR Overlap C	Red	White	Red
		Blue	White	Yellow
		Green	White	Green
Phase 4	Ph 8 OR Overlap D	Red	Green	Red
		Orange	Red	Yellow
		Blue	Red	Green
Phase 1 or 2 PED*	Ph 5 Or 6 PED*	Blue	Solid	Walk
		Black	Solid	Don't Walk
Phase 1 or 2 PB*	Ph 5 Or 6 PB*	White	Red	Push Button
Ph 3 Or 4 PED*	Ph 7 Or 8 PED*	Blue	Black	Walk
		Black	White	Don't Walk
Ph 3 Or 4 PB*	Ph 7 Or 8 PB*	Black	Red	Push Button
All Phases	All Phases	White	Solid	P.B. Common
		Blue	Black	Spare

Cable #1 Shall Be Marked With An Individual Wrap Of White Tape. Cable #2 Shall Be Marked With Two Individual Wraps Of White Tape, Side By Side With A ½'' Gap Between Wraps. Cables Shall Have 12'' Of Black Insulation Jacket Extending Past Conduit Bell End. Individual Conductors In The Cable Shall Be Tagged As To Assigned Phase.

* Refer To Engineering Timing Sheet To Determine PED Phases as 2, 4 or 1, 3, 5, 7 or 2, 4, 6, 8. All Wire Groups In Pull Boxes Must Be Tape Coded Per Scottsdale Directional Tape Color Code.

FIGURE 5.4-6. IMSA CABLE 19-1, #14 AWG (STRANDED) 20 CONDUCTOR

4 CONDUCTOR & 7 CONDUCTOR IMSA CABLE (STRANDED)

SIGNAL HEADS FOR 5 SECTION HEAD FUTURE OR INITIAL 7 Conductor Cable	
Basic Color	Signal Interval
Red	Red
Black	Yellow
Green	Green
Orange	Yellow Arrow
Blue	Green Arrow
White	Veh. Com
White	Veh. Com

SIGNAL HEADS INBOARD & SIDE MOUNT 4 Conductor Cable	
Basic Color	Signal Interval
Red	Red
Black	Yellow
Green	Green
White	Veh. Common

PEDESTRIAN HEADS 4 Conductor Cable	
Basic Color	Signal Interval
Red	Don't Walk
Green	Walk
White	Ped. Com.
Black	Spare

PUSH BUTTON 4 Conductor Cable	
Basic Color	Push Button Station
Red	Push Button
White	P.B. Common
Green	Spare
Black	Spare

Cables Shall Be Tagged As To Assigned Phase, Per Scottsdale Directional Tape Color Code. Cable Shall Be Pulled To All Tenons On M/A. Any Unused Tenons Shall be Capped. Cables Shall Extend 18'' Into Signal Head With 8'' Of Black Insulation Jacket. Cables Shall Have 12'' of Black Insulation Jacket Extending Past Conduit Bell End. Cables Shall Be Identified In Pull Boxes By Individual Wraps Of Colored Tape, Incrementing By One, Starting With Inboard Side Mount As #1.

FIGURE 5.4-7. IMSA CABLE 19-1, #14 AWG (STRANDED) 4 & 7 CONDUCTOR (STRANDED)

THROUGHS	
NB = Red EB = Green	SB = Yellow WB = Blue

PEDESTRIAN CROSSINGS
Pedestrian Heads = Color + Purple ***Examples:*** NB = Red + Purple EB = Green + Purple

TURNS
Left Turn = Color +White Right Turn = Color + Black ***Example:*** WBLT = Blue + White

PEDESTRIAN PUSH BUTTONS
Color + Orange

OVERLAPS
Color + Brown

Telco is marked orange. All Tape Shall be 3M Scotch 35 Model or Super 33.

FIGURE 5.4-8. DIRECTIONAL TAPE COLOR CODE

5-4.500 GENERAL REQUIREMENTS & SPECIFICATIONS

All traffic signals and lighting equipment, in addition to meeting the requirements of this specification, shall conform to the current version of the following documents:

- Standard Specifications for Road and Bridge Construction - ADOT
- Traffic Signals and Lighting, Standard Drawings - ADOT
- Traffic Signal Control Equipment Specifications - CALTRANS
- Wire and Cable Specifications - International Municipal Signal Association
- Traffic Control Systems, Standards Publications – Nat. Electrical Manufacturers Assoc.
- Manual on Uniform Traffic Control Devices - USDOT/FHWA
- Standard Specifications for Structural Supports for Highway Signs, Luminaries, and Traffic Signals - American Assoc. of State Highway and Transportation Officials
- Type 170 Traffic Signal Controller System - Hardware Specification - USDOT/FHWA
- COS Traffic Signal Special Requirements.

5-4.501 LIGHTING SPECIFICATIONS

Intersection lighting shall be: 120 volt, 250 watt, two door, 90-degree cutoff with filter, GE model M 250, or ITT model 25-5232DJ, or approved equivalent per specifications. Luminaires shall include one solid-state photocell ALR model 2172 NP3 or approved equivalent for each luminaire. All wire to the installation shall be THHN/THWN or approved equal.

5-4.502 ELECTRIC SERVICE CABINET

Use approved alternate with lighting arrest installed. Photocell receptacle should be rated for 20 amps. Install Grounding Rod within the customer side of the electric service cabinet.

5-4.600 TRAFFIC SIGNAL STRUCTURES

A. Qualified Products List (QPL)

A Qualified Products List has been established for Scottsdale traffic signal structures. See Appendix 5-4B. Qualified product contractors are not required to submit documentation for review by the city. Bids submitted without product documentation will be deemed non-responsive and WILL NOT BE OPENED.

All contractors submitting bids for traffic structures not on the QPL must provide documentation for city review in advance of their bid submittal. Submit the following for city's review:

1. Traffic signal structure drawings and specifications.
2. Traffic signal structure load calculations, signed and sealed by an engineer registered in the state of Arizona (based on the maximum city loading).
3. Documentation of all deviations from ADOT specifications.
4. A letter signed and stamped by a state of Arizona registered, professional engineer stating that the signal structure will safely support the maximum loading as described by the city.
5. Recommended foundation designs and specifications for all traffic signal structures, except the ADOT/Scottsdale traffic signal structures.

B. Traffic Signal Structures ADOT/Scottsdale

The base specification and warranty requirements for the ADOT/Scottsdale traffic signal structure shall be:

- Standard Specification for Road and Bridge Construction - ADOT (Current)
- Traffic Signals and Lighting, Standard Drawings - ADOT (Current)

TYPICAL PHASING PLAN

All left turns are LAGGING unless otherwise specified due to special circumstances; exceptions approved on a case-by-case basis.

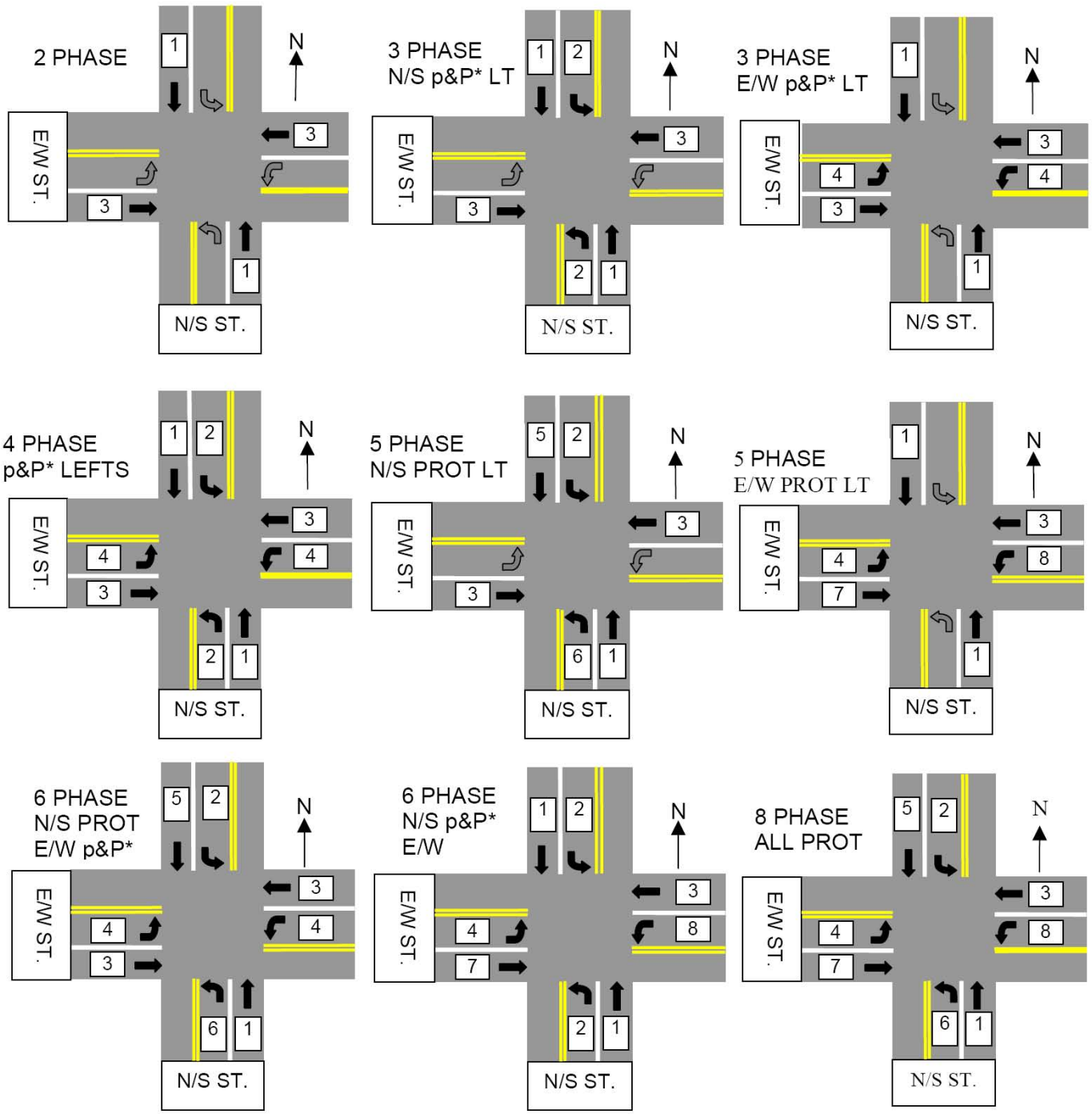

* p&P = *p*ermissive / *PROT*ected left turn operation.

Qualified Products List

Scottsdale Transportation Systems Department, Operations Division

Type 170 System Cabinet:
Model 330 Cabinet
Safetran Traffic Systems, Inc.
McCain Traffic Supply
US Traffic Systems, Inc.

Type 170 Controller Units:
Safetran Traffic Systems, Inc. 170ATC-HC11
McCain Traffic System, Inc. 170ATC-HC11

Telemetry Units:
General Devices, Inc. (G.D.I.), Model 400 modem, Rev. E

Type 170 Controller Unit Software:
Wapiti Micro Systems Corp. W4IKS, current Rev.
Wapiti Micro Systems Corp. Traffic View, current Rev.

Model 200 Load Switch – Category 1:
PDC – SSS-87
Solid State Device 200K

Model 200 Load Switch – Category 2:
PDC – SSS-88
Solid State Device 200D

Model 204 Flashers – Category 1:
PDC – SSF-87
Solid State Devices 204K

Model 204 Flashers – Category 2:
PDC – SSF-88-X
Solid State Devices 204D

Model 210 Conflict Monitor:
Solid State Devices Model 210P
Solid State Devices Model 210PC
Eberle Design, Inc., Model 210E

Traffic Signal Pre-emption Devices:
3-M Model 721, Detector
3-M Model 752 Phase Selector
3-M Cable 138
3-M Model 792 Emitter.
(Requires purchasing approval from Traffic Engineering to the Supplier)

Model 222 Detectors – Category 1:
3M Canoga Model P422T
Detector Systems Model 222D
3M Canoga Model C422 or C424

Model 222 Detectors – Category 2:
Detector Systems Model 222B
Indicator Control Corp., Part #3DLD827B
3M Canoga Model C422 or C424

Model 242 Two Channel DC Isolators:
General Devices & Instruments Model 242
PDC Model 242
Detector Systems

Loop Wire:
IMSA 51-5 with orange jacket #14 AWG

Photo Electric Cell:
ALR Model 2172 NP3

Telephone Cable:
Beldon 9418

Loop Lead-in Cable:
IMSA Model 50-2, #14 AWG

Uninterruptible Power Supplies (UPS):
US Traffic/Meyers Powerback – 2000 System in model 336S cabinet, painted white.

Audio Crosswalk ADA Device:
Mallory VSB 110-1 (north/south)
Mallory VSB 110-2 (east/west)

Traffic Signal Conductor Cable:
IMSA 19-1 “14 AWG” stranded cable, in 20, 7 or 4 conductor.

Model 252 Two-Channel AC Isolators:
PDC Model ACI-88
Detector Systems

Model 430 Relays:
Magnecraft Model W21 ACPX-2
Midtex 136-62T3A1
Traconex Model W21 ACPX-2

Model 721 Optical Detector:
3-M Safety and Security System Division

Model 752 Phase Selector:
3-M Safety and Security System Division

Model 196 High Priority Emitter Assembly:
3-M Safety and Security System Division

Model 195 Low Priority Emitter Assembly:
3-M Safety and Security System Division

Model 138 Optical Detector Cable:
3M Safety and Security System Division

Electric Service Cabinet, Models:
Meyers MUEG16-M100-A2
Milbank CP3B11115AWSP3
Pacific Utility Products USP-M100-112CTB

Qualified Products List

Scottsdale Transportation Systems Department, Operations Division

The effective period this QPL is indeterminate. Manufacturers are required to notify the 170 Program Coordinator of any proposed changes affecting design or performance in the product that has been approved. This includes all components listed in manuals and all engineering changes.

Manufacturers not on the list who want their assemblies or units tested so as to be added to the QPL for future bids should submit a written request to the 170 Program Coordinator*.

Failure to perform satisfactorily on purchase orders by failing to meet delivery schedules or maintain a high rate of acceptance will result in being removed from the QPL.

Scottsdale Traffic Signal Maintenance Supervisor
Phone: 480-312-5635
E-mail: dedwards@scottsdaleaz.gov

City of Scottsdale
Municipal Services Department
9191 E. San Salvador
Scottsdale, AZ 85258

Traffic Signal Structures:

ADOT/Scottsdale

Valmont Industries, Inc.	Drawing #DB00181, no Rev.
Valmont Industries, Inc.	Drawing #DB00182, no Rev.

Couplet "Trombone" Type Pole

Valmont Industries, Inc.	Drawing #DB00243,
Type "R" Mod-Cell Tower Monopole	Drawing #DB00707

CALTRANS Requirements

Scottsdale Transportation Systems Department, Operations Division (STED)

QUALIFIED PRODUCTS LIST (QPL):

Controller Assemblies for the Model 170 Traffic Controller

Any controller submitted to the City of Scottsdale for addition to the Scottsdale QPL must first be tested and passed by CALTRANS and/or the Oregon DOT.

The assemblies listed on the current CALTRANS QPL have been tested by the California Transportation Laboratory and found to be compliant to the "Traffic signal Control Equipment Specifications" (TSCES), dated April 1978, and applicable addendum. When these assemblies are to be purchased, only those listed on that document will be considered.

QUALIFIER TO QUALIFIED PRODUCTS LIST:

A manufacturer's listing on the QPL does not waive any of the requirements of the specifications or relieve the manufacturer/contractor of any obligation thereunder. Defective work, materials, and equipment will be rejected. In short, all equipment submitted must comply to current specifications.

The effective period of this QPL is indeterminate. Manufacturers are required to notify the 170 Program Coordinator of any proposed changes affecting design or performance in the product that has been approved. THIS INCLUDES ALL COMPONENTS LISTED IN MANUALS AND ALL ENGINEERING CHANGES.

Manufacturers, not on the list, who want their assemblies or units tested so as to be added to the QPL for future bids should submit a written request to the 170 Program Coordinator.

Failure to perform satisfactorily on purchase orders by failing to meet delivery schedules or maintain a high rate of acceptance will result in removal from the QPL.

ROBERT MCMILLAN
170 Controller Program Coordinator
(916) 654-4385
Calnet 646-4385
FAX: (916) 653-3053
Calnet FAX: 800-453-3053

DEPARTMENT OF TRANSPORTATION
Division of Traffic Operations
1120 N. Street
Sacramento, CA 95814

transportation

SIGNS & MARKINGS

5-5

This section provides the procedures and criteria for designing traffic signs and pavement markings within the city. It presents standards for plan layout, signing, and striping.

Transportation
7447 E Indian School Road
Suite 205
480-312-7696

One Stop Shop
7447 E Indian School Road
Suite 100
480-312-2500

Plan Review
7447 E Indian School Road
Suite 105
480-312-7080

contents

Sections

5-5.000	General Information
5-5.100	Design Standards
5-5.200	Standard Plan Layout

Figures

5.5-1 to 4	Standard Striping – Lane Markings
5.5-5 to 8	Standard Turning Bay & Trap Lane Markings
5.5-9 & 10	Crosswalk Markings
5.5-11	Dual Left Turn Intersection Markings
5.5-12	Standard Plans Sheet Notes Block

SIGNS & MARKINGS

GENERAL INFORMATION

5-5.000

The following publications or their current revisions are to be used in conjunction with the design criteria in this manual for traffic signs and markings design work.

- Manual On Uniform Traffic Control Devices For Streets And Highways (MUTCD)-USDOT/FHA, Current Revision.
- Signing And Marking - Standard Drawings - ADOT
- ADOT Traffic Control Design Guidelines - ADOT 2003
- Manual Of Approved Signs (MOAS) - ADOT
- Traffic Engineering Policies, Guidelines and Procedures - ADOT
- Supplement To MAG Uniform Standard Specifications For Public Works Construction - City of Scottsdale (COS)
- Supplemental Standard Details For Public Works Construction - COS
- Uniform Standard Specifications For Public Works Construction - MAG
- Uniform Standard Details For Public Works Construction - MAG
- Traffic Barricade Manual - City of Phoenix
- Streets Master Plan – COS

DESIGN STANDARDS

5-5.100

Design is to be in accordance with the MUTCD unless modified by the city as noted.

SIGNING

5-5.101

1. All sign posts are to be telespar per COS Supplement to MAG Uniform Standard Specifications, Detail 2131.
2. Utilize streetlight poles for sign mounting whenever possible.
3. "No Parking" signs are R8-3a (12" x 18") with an arrow below the symbol, designating the direction of the restriction. They should be spaced approximately 350-400 feet apart on all streets classified as arterials and collectors in the Streets Master Plan. Signs need to be placed at 45 degrees to the curb.
4. Speed limit signs (R2-1) are to be installed at 4 per side per mile.
5. Stop signs (R1-1) are to be 30" x 30" minimum size.
6. Street name signs in subdivisions must conform to city colors and standards.
7. Advance street name signs are to be installed at a height of 4 feet to the bottom of sign and placed so they are not obstructed by vegetation. Signs are to be installed in medians whenever possible.
8. Median nose signing is to be installed per COS Supplemental Detail No. 2133 as follows:
    - Type "A" is to be installed at signalized intersections and the first median nose in a succession of medians, or where the gap between medians exceeds 250 ft.
    - Type "B" is to be used at all other median nose locations.

5-5.102 STRIPING

1. All permanent longitudinal pavement striping (centerlines, lane lines, bay lines) shall be 60 mil. hot-sprayed or extruded thermoplastic. Reflective beads shall be applied in accordance with section 704 of ADOT's Standard Specifications for Road and Bridge Construction. All permanent lateral pavement striping (stop lines, crosswalk lines) shall be 90 mil. Hot-sprayed or extruded thermoplastic. Reflective beads shall be applied as per Section 704 above.
2. All temporary pavement markings shall be reflective traffic paint.
3. All median noses shall be painted with reflectorized traffic paint and have Type D yellow RPMs per COS Supplemental Detail No. 2225 and 2226.
4. COS striping and marking standards are shown in Figures 5.5-1 through 5.5-11.

A. Skip Lines

- Striping: 4 inch wide lines, ten feet long, gaps 30 feet
- Include RPMs centered within gaps:
  - Yellow Type D two-way reflective
  - White Type G one-way reflective

FIGURE 5.5-1. SKIP LINES MARKINGS

B. Short Skip Lines

- Striping: 4 inch wide lines, 2 feet long, gaps 6 feet

FIGURE 5.5-2. SHORT SKIP LINES MARKINGS

C. Edge Lines

- 4 inch wide White off the edge of pavement where curbs are committed.
- 6 inch wide White between travel lane and bike lane
- 8 inch wide White where asphalt tapers for a lane drop, etc.

FIGURE 5.5-3. EDGE LINES MARKINGS

D. Two-Way Left Turn Lanes

- All lines 4 inch wide Yellow, skip lines to follow typical skip dimensions
- Include RPMs centered within gaps: Yellow Type D two-way reflective

FIGURE 5.5-4. TWO WAY LEFT TURN LANE MARKINGS

E. Left Turn Bay

- Used at signalized intersections and major cross streets
- Arrow and "ONLY" to be painted in left turn bays which do not align with opposing left turn bays.
- If bay line is longer than 150 feet, then a second arrow is placed at the top of the bay.*
- Use White RPMs type G one-way reflective. **

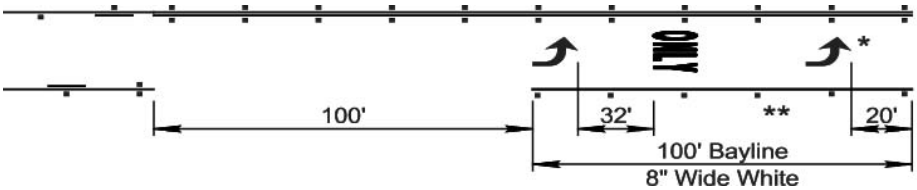

FIGURE 5.5-5. LEFT TURN BAY MARKINGS

F. Right Turn Bay

- 100 feet bay line, 8 feet wide White lines
- Minimum one R3-5(R), 30 inch x 30 inch
- Two R3-5(R)s if bay is 150 feet or more
- One arrow, one "ONLY" marking at beginning of bay
- If bay is 150 feet or more, second arrow to be installed at end of bay
- For turn bays at stop sign, R3-5(R) not to obstruct stop sign.

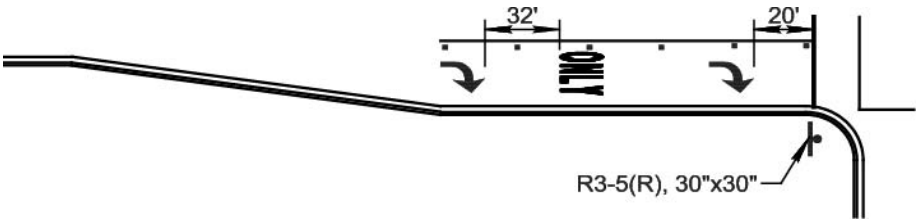

FIGURE 5.5-6. RIGHT TURN BAY MARKINGS

G. Trap Lanes

- 40 mph or less:

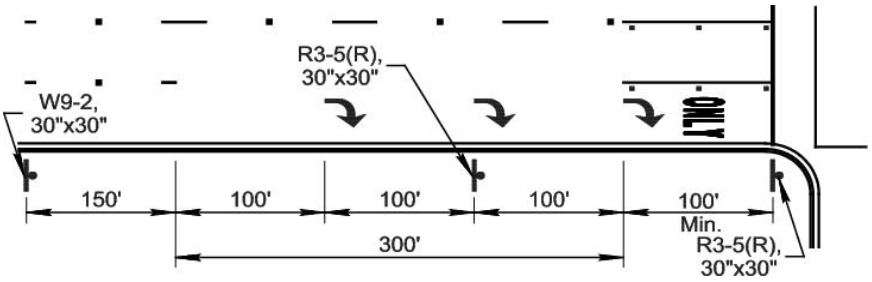

FIGURE 5.5-7. TRAP LANE MARKINGS – 40 MPH OR LESS

- 45 mph or greater:

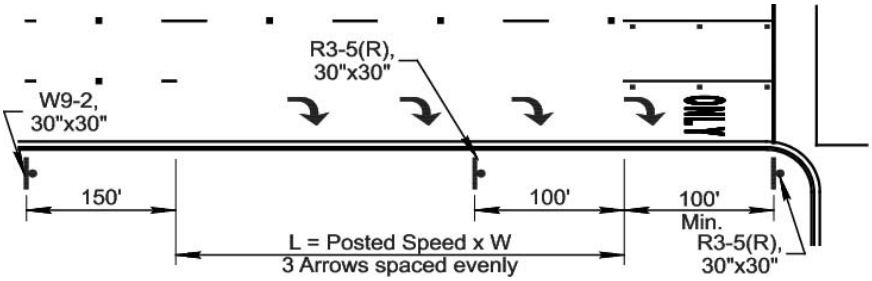

FIGURE 5.5-8. TRAP LANE MARKINGS – 45 MPH OR GREATER

H. Crosswalks

- Crosswalks are to be used at signalized intersections only unless otherwise specified.

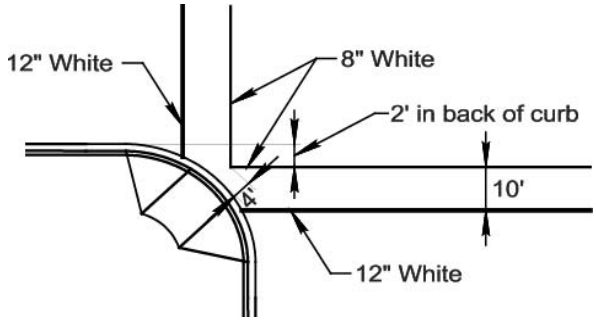

FIGURE 5.5-9. SINGLE RAMP CROSSWALK MARKINGS

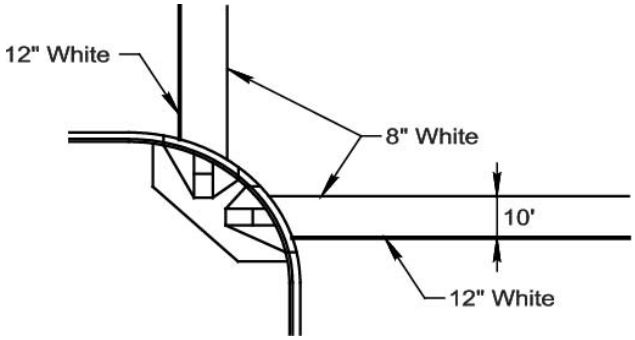

FIGURE 5.5-10. DIRECTIONAL RAMP CROSSWALK MARKINGS

I. Dual Left Turn Movement

- Paint short skips through intersection
- Space RPMs to align with lane lines or centered in lanes (as shown).

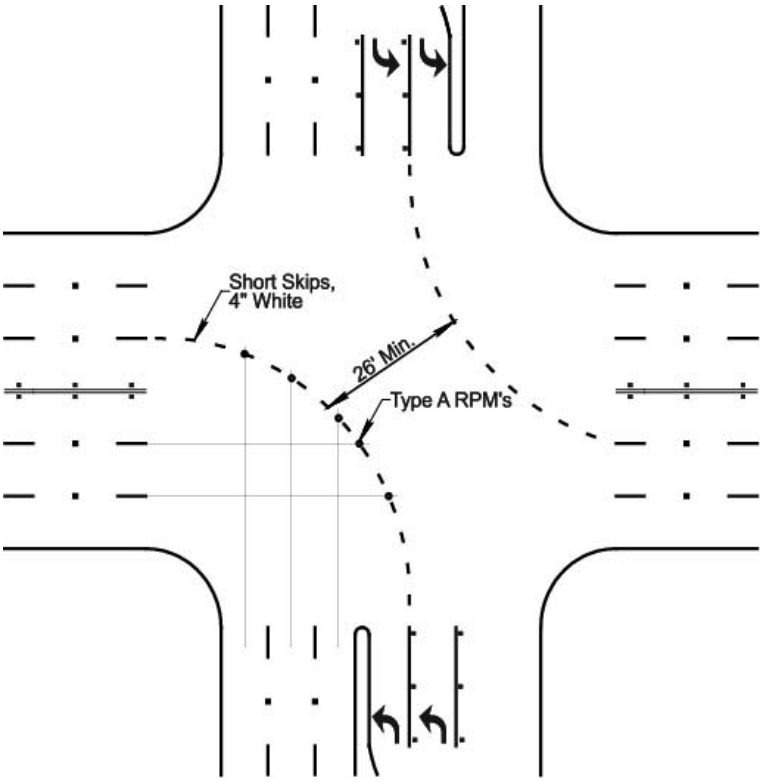

FIGURE 5.5-11. DUAL LEFT TURN INTERSECTION MARKINGS

STANDARD PLAN LAYOUT

5-5.200

GENERAL REQUIREMENTS

5-5.201

1. Signing and pavement marking design should be shown in the same plan view on the same plan sheet if practical.
2. Plan sheets are to be complete and to scale, no smaller than 1 inch = 40' unless otherwise approved by the city Traffic Engineering Division.
3. Entire length of project is to be shown in plan view. Typical Sections representative of striping and/or signing will not be accepted.
4. Signing and pavement marking plans need to include all existing signing and pavement markings for a minimum of 300 feet past the limits of construction (except those devices that are to be removed), and include adequate transitions and tapers to existing pavement markings to maintain traffic at the design speed.
5. The city requires a specific title and signature block to be placed in the lower right corner of each sheet (see Traffic Signal Design Figure 5.4-2). The Consultant's title block is placed adjacent to the city block. The signature block includes the Traffic Engineering Director.
6. Rights-of-way lines are to be clearly identified.

5-5.202 STANDARD PLAN SHEET NOTES

These notes along with any additional project specific notes are to be placed on the lead signing and pavement marking plan sheet.

STANDARD PLANS SHEET NOTES BLOCK
1. All pavement markings, signing, and work zone traffic control type and layout need to conform to the latest edition of the "Manual on Uniform Traffic Control Devices". 2. Work zone traffic control needs to conform to the city of Phoenix "Traffic Barricade Manual" and/or as directed by the city Public Works Inspector or the Traffic Engineering Division. 3. Signs are to be installed on telespar posts per COS Standard Detail No. 2131. 4. Dimensions to signs need to include the sign post, or in the case of multiple posts, the plan view center of the sign. 5. "No Parking" signs (R8-3a 12” x 18”) with arrows (single direction or bi-direction, per plan) should be installed or reinstalled approximately every 350-400 feet along the length of the project, approximately 5 feet from the back of curb, angled 45 degrees from the roadway. Band to street light poles when feasible. 6. All longitudinal striping (edge line, lane line, and centerline) shall be .060" (60 mil) hot-sprayed thermoplastic, unless otherwise noted on the plans. 7. All transverse striping (stop lines, crosswalk lines) shall be a minimum of .090” (90 mil) hot-sprayed or extruded thermoplastic, unless noted otherwise on the plans. 8. All plan view striping dimensions are measured to the center of the line or center of the double line. 9. All pavement symbols, arrows, and legends shall be Type I pre-formed pavement markings. 10. Raised pavement markers (RPMs) shall be used on all striped streets. RPMs shall be installed per COS Standard Detail No. 2132 and ADOT Standard Drawing M-19, with a city approved bituminous adhesive. 11. Blue Type F (two-way reflective) RPMs shall be used to indicate the location of all fire hydrants and remote fire department connections, per COS Standard Detail No. 2363. 12. All existing pavement markings that conflict with proposed markings shall be removed by sandblasting, hydroblasting, or grinding prior to the installation of new pavement markings. Removals shall be to the satisfaction of the city Inspector. 13. Type III Sheeting (minimum) shall be used for all warning and regulatory signs. 14. The contractor is responsible for layout of all pavement markings using control points spaced no more than 50ft apart. Pavement marking layout shall be approved by Traffic Engineering prior to the application of the final product. All pavement marking drawings are schematic only. The contractor shall follow all dimensions, details, and standards when installing pavement striping, marking and markers.

FIGURE 5.5-12. STANDARD PLANS SHEET NOTES BLOCK

5-5.203 SIGNING

1. All signs should be graphically depicted in the direction of travel.
2. All signs shall be stationed and referenced to the appropriate MUTCD sign designation with size noted.
3. New and existing signs should be visible to traffic for a value equal to 4 times the (format problem)

4. Existing or proposed speed limit should be posted to provide adequate approach visibility. Existing or proposed roadway improvements, vegetation, or structures cannot block traffic sign visibility.
5. All existing signs shall be identified to remain, be removed, or be relocated and shall be stationed and referenced to the appropriate MUTCD sign designation.
6. All existing advance or approach signing applicable to the project shall be field verified and referenced signs on the plan sheets, including location and/or station, and proposed status of sign.

STRIPING

5-5.204

1. All existing striping that is to remain shall be fully shown (as screened lines or lightly inked pen lines), identified by type and width, and completely dimensioned across roadway.
2. Raised pavement markers shall be graphically shown in plan view and referenced by construction notation.
3. All new striping shall be clearly identified noting color, line width, beginning station, ending station, and intermediate stations at all directional changes.
4. Striping to be removed needs to be identified as such on the plans.
5. All striping must shall be fully dimensioned across roadway and tied to a construction centerline or monument line at each side of an intersection.
6. All pavement arrows, legends, crosswalks, etc., shall be located by station or dimension lines.

TRANSIT

This section documents transit facility guidelines for Scottsdale's public works projects and developers working on projects that will impact the transit system. This includes projects that create high-activity centers such as shopping malls or high-density living areas. Criteria are documented for locating bus stops and transit amenities such as bus benches and transit shelters. It includes street geometrics for bus bays, standard signage, and review and submittal requirements. There is also a brief discussion on landscaping as it relates to transit amenities. The guidelines consider the needs of the transit user, the bus operator, neighbors adjacent to bus stops and the general public.

Transportation
7447 E Indian School Road
Suite 205
480-312-7696

One Stop Shop
7447 E Indian School Road
Suite 100
480-312-2500

Plan Review
7447 E Indian School Road
Suite 105
480-312-7080

contents

Sections

5-6.100 Criteria For Bus Stop Locations
5-6.200 Transit Amenities
5-6.300 Bus Bays (Pullouts)
5-6.400 Landscaping
5-6.500 Signage
5-6.600 Other Facilities
5-6.700 Bus Stop Maintenance
5-6.800 Submittal Requirements & Review Procedures

Figures

5.6-1 Standard Bus Stop Locations
5.6-2 Special Conditions Bus Stop Locations
5.6-3 Driveway Locations Near Bus Stop
5.6-4 Bus Stop Clearance Zones
5.6-5 Bus Shelter Foundation Plan
5.6-6 Typical Bus Shelter
5.6-7 Bus Bay Dimensions
5.6-8 Bus Stop Signs
5.6-9 Bus Stop Sign Clearances

CRITERIA FOR BUS STOP LOCATIONS

5-6.100

BUS STOP SPECIFICATIONS

5-6.101

Frequency of bus stops is dictated by the distance bus patrons are willing to walk to board a bus. The minimum standard for bus stop locations in Scottsdale is at 1/4 mile intervals for residential areas and 1/8 mile intervals for major activity centers, as shown in Figure 5.6-1.

To provide the greatest convenience and safety for passengers, bus stops are generally located as close to intersections as possible. This minimizes walking distance for transferring passengers and encourages the use of crosswalks. Far side stops, those located immediately past an intersection, are optimal for the following reasons:

- Minimal interference with traffic flow
- Minimal interference with intersection sight distance
- Less likelihood of passengers crossing in front of a bus
- Less conflict for automobile right turns
- Less obstruction for vehicles entering the intersection from a side street
- More effective bus re-entry into the traffic stream

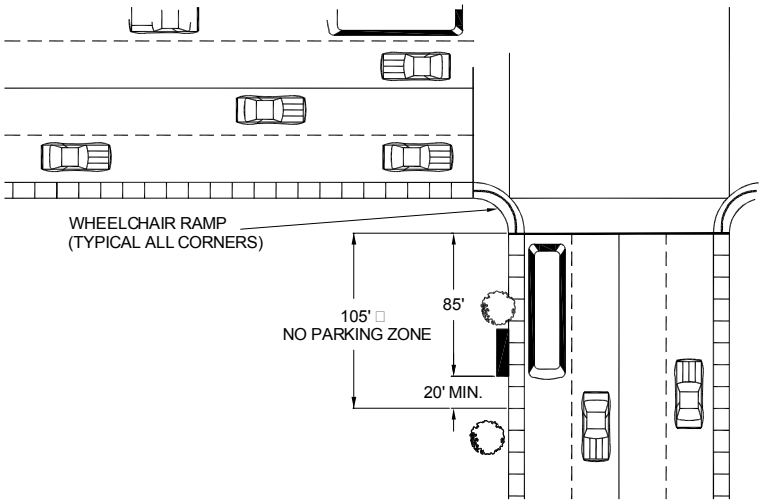

FIGURE 5.6-1. STANDARD BUS STOP LOCATION

The location of a transit stop is generally 85 feet, plus or minus 25 feet from the curb of an unsignalized intersection, and 105 feet plus or minus 25 feet from a signalized intersection. In some circumstances, due to the location of major generators, driveways, or unusual landscape issues, other locations can be submitted to the Transportation Department for consideration and approval. Some circumstances are illustrated in Figure 5.6-2 and 5.6-3.

Near Side Bus Stop

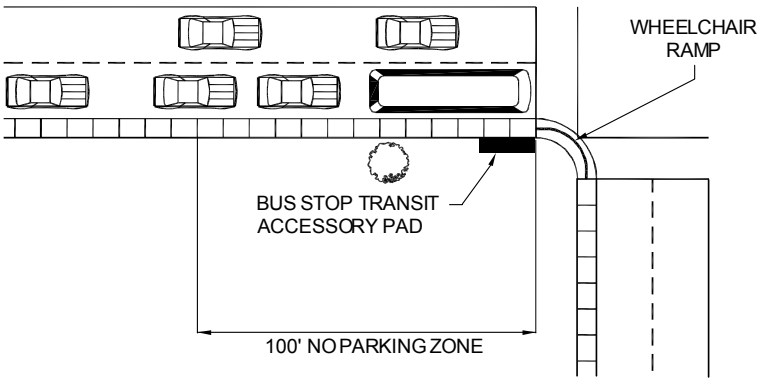

Far Side Bus Stop - Right Turn

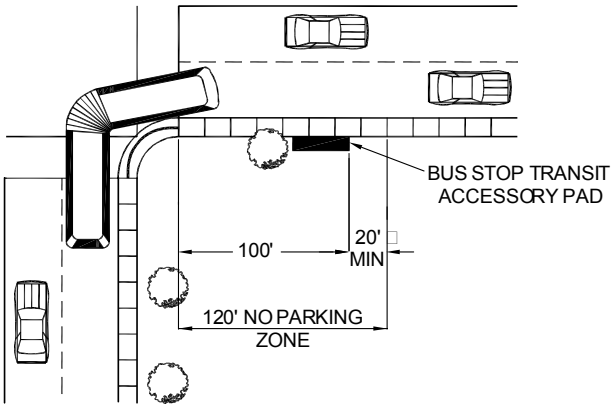

Mid-Block Bus Stop

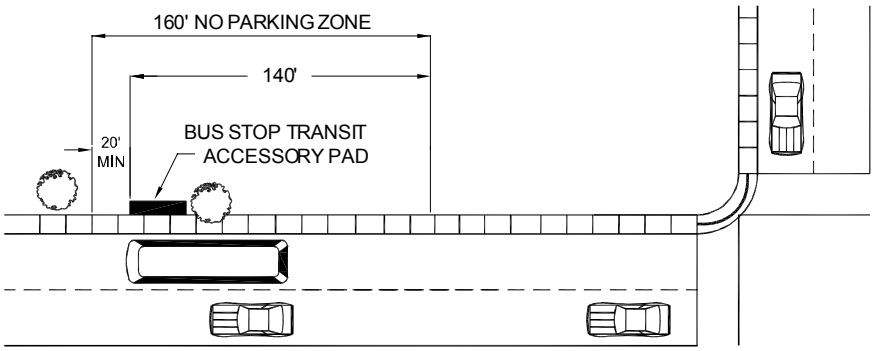

FIGURE 5.6-2. SPECIAL CONDITIONS BUS STOP LOCATIONS

Near side bus stops (those located immediately before an intersection) are considered when placement of far-side stops is not feasible or when that stop will be located near buildings with high volumes of transit riders. These types of stops may also be located where a high-volume bus transfer location would otherwise require a pedestrian crossing at a busy street.

On occasion, a mid-block bus stop may be utilized to provide access to a major generator, but it is generally discouraged due to the likelihood that pedestrians would cross streets mid-block rather than at intersections.

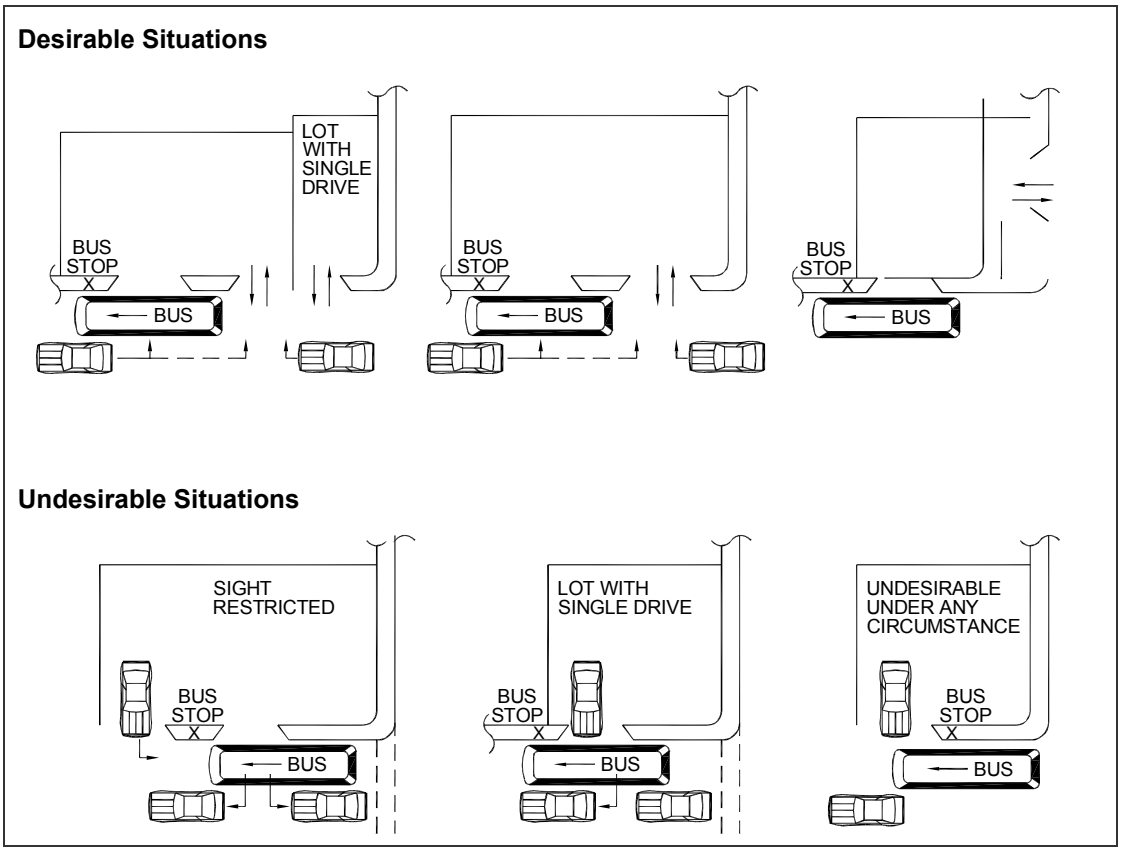

FIGURE 5.6-3. DRIVEWAY LOCATIONS NEAR BUS STOP

Where a development or subdivision is walled-off from the street, steps should be taken to allow easy pedestrian access. This could include a pedestrian access path linking various sections of the development to the bus stop or a system of offset walls around developments, which allow pedestrian passage.

All transit stop furniture must be placed outside the standard sidewalk. A minimum 4 foot clearance is required between transit components and fire hydrants, switch boxes, mail boxes, etc.

ACCESSIBILITY 5-6.102

All transit facilities must comply with the applicable provisions of the Americans with Disabilities Act and associated guidelines, as updated. The paved loading area should be clear of any obstructions (see Figure 5.6-4). In general, a 48- inch clearance is to be maintained between bus stop components to allow for wheelchair maneuvering. A minimum clear length of 96 inches (measured from the curb or roadway edge) and a minimum clear width of 60 inches (measured parallel to the roadway) needs to be provided at all transit stop locations where a sidewalk is available or where major improvements have been made to an existing inaccessible stop. This clear space is needed in order to load wheelchairs. See MAG Standard Details 230, and COS Standard Details 2232 for related issues. Similarly, where major improvements have been made to an existing inaccessible stop (e.g. pad, bench, or shelter), a sidewalk of at least 4 feet wide must be constructed to provide an accessible path to the nearest intersection.

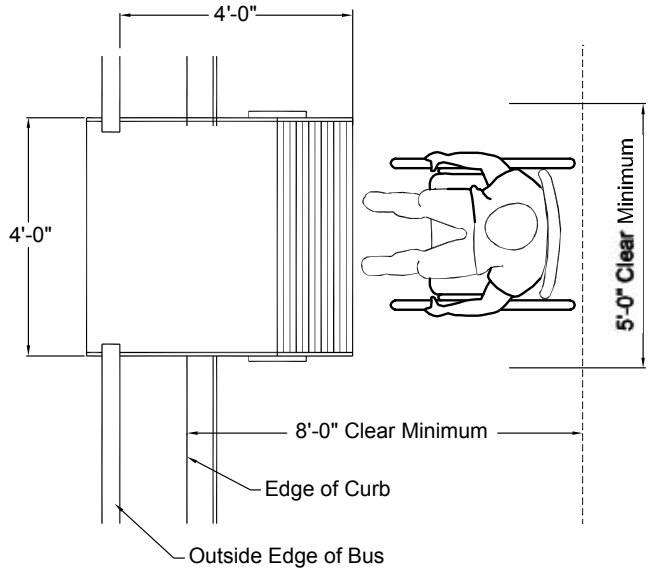

FIGURE 5.6-4. BUS STOP CLEARANCE ZONES

5-6.200 TRANSIT AMENITIES

Comfortable and secure passenger waiting areas should be provided at as many bus stops as feasible. The waiting areas may include a varying range of improvements depending upon ridership and specific site needs. Below are typical transit amenities and conditions under which they should be employed. Advertising and placards are not allowed.

5-6.201 BENCHES

Benches should be located at all bus stops. Several styles of benches have been approved for placement in Scottsdale, depending on location. Specialty benches are used in downtown Scottsdale. (See COS Standard Detail 2268 for slab requirements.) A standardized bench with matching trash receptacle is used in all other areas except for those bus stops affected by the Environmentally Sensitive Land Ordinance (ESLO). Interested parties may contact the Transportation Department for the most recently approved standard. Transit amenities located within ESLO boundaries must conform to its guidelines (see www.scottsdaleaz.gov/codes/eslo). Additional styles may be acceptable, but require city staff approval and may need Development Review Board approval.

Benches should be designed to have backrests for support and spacers between the seats to discourage people from lying on the seats. A minimum of 6 linear feet of seating should be used. More seating is required at higher usage stops. Please contact the Transportation Department to determine if a location is a high usage stop.

5-6.202 SHELTERS

Shelters should be located at all bus stops. In a development, any requirement for passenger shelters may be waived by city staff approval if there is adequate exterior shading and architectural shelter.

Shelters should be arranged with considerations to the sun's angles. Coverage should allow for maximum shade during the peak use hours of the summer morning and afternoon. However, the shelter should also be oriented to allow the bus driver clear visibility of the passengers and to allow passengers a view of oncoming traffic.

Scottsdale has a standard shelter design; contact the Transportation Planning Division to obtain copies (see Figure 5.6-5 for a typical foundation for a typical foundation and Figure 5.6-6 for a photograph of a typical shelter). The dimensions of the bus stop and the minimum for a Bus Stop Easement are 11 feet by 28 feet; this allows a 2-foot working area around the actual passenger shelter (see Figure 5.6-7). Other shelter designs may be used if approved by city staff and possibly, the Development Review Board.

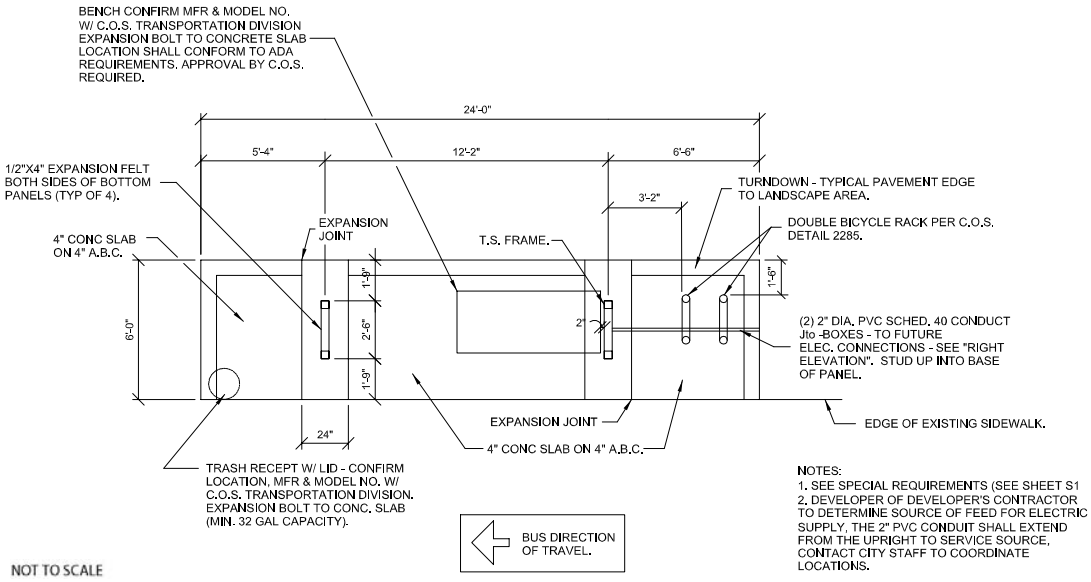

FIGURE 5.6-5. BUS SHELTER FOUNDATION PLAN

Shelter designs must meet the following criteria:

1. Minimum canopy of 65 square feet with a minimum width of 5.5 feet.
2. Minimum 7-foot clearance between underside of roof and sidewalk surface.
3. Waterproofed shelter canopy with provisions for drainage away from transit users.
4. Shaded seating areas.
5. Sight distance into and out of the shelter.
6. Minimum 6 inches of vertical clearance from the sidewalk to avoid trash and debris collection.
7. Fixed components to prevent unauthorized removal.
8. Materials that allow for air circulation and avoid hot air containment.
9. Materials finished to prevent overheating.
10. Insulated canopy materials that collect and radiate heat.
11. Materials, coatings, and surfaces that are graffiti-resistant.
12. Components of the shelter that are readily replaceable.
13. Colors appropriate to the architectural character of the development and the transit system (Per review and approval of Development Review Board).
14. Minimum two-foot clearance between roof canopy and face of curb.
15. Arrangement of furniture that allows access for wheelchair users.

A. OTHER

1. Trash receptacle need to provide a minimum capacity of 30 gallons.
2. Bus stop graphics need to meet city requirements.
3. A minimum of two bike loops need to be installed. (Refer to Section 5-7 Bikeways and COS Standard Detail 2285).

FIGURE 5.6-6. TYPICAL BUS SHELTER

5-6.300 BUS BAYS (PULLOUTS)

Bus bays enable buses to pull completely out of the traffic lane while loading and unloading passengers. Bus bays are recommended under the following conditions:

1. At or near transfer points,
2. Along arterial streets,
3. At locations recommended by the city's Traffic Engineering staff,
4. At layovers at the end or along bus routes.
5. When average peak period boardings exceed 5 people per bus, or
6. When average peak period dwell time exceeds 30 seconds per bus, or
7. When there have been 5 accidents involving buses within the past year.
8. At locations where wheelchair boardings are likely.

Two types of bus bays are allowed: open-ended and closed. Closed bus bays are the preferred option. Generally, open-ended bays are used on far-side stops where space is limited. (See Figure 5.6-7 for generalized dimensions and COS Standard Details 2266-1, 2266-2, and 2267 for specific dimensions.)

Closed (Preferred)

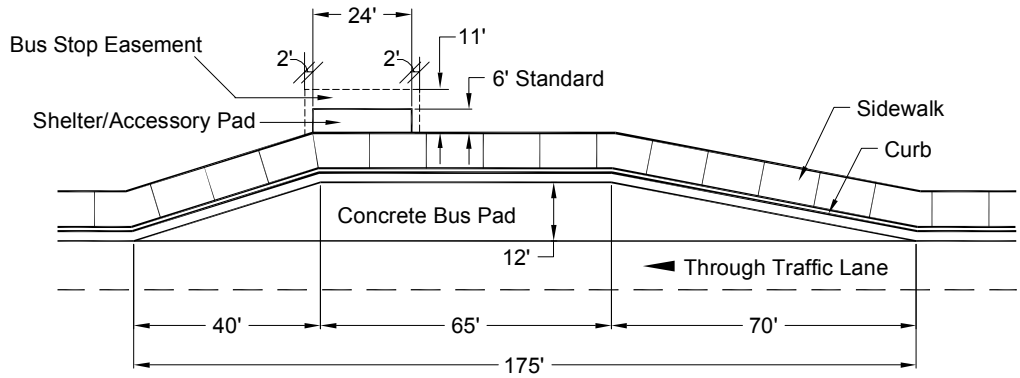

Open Ended

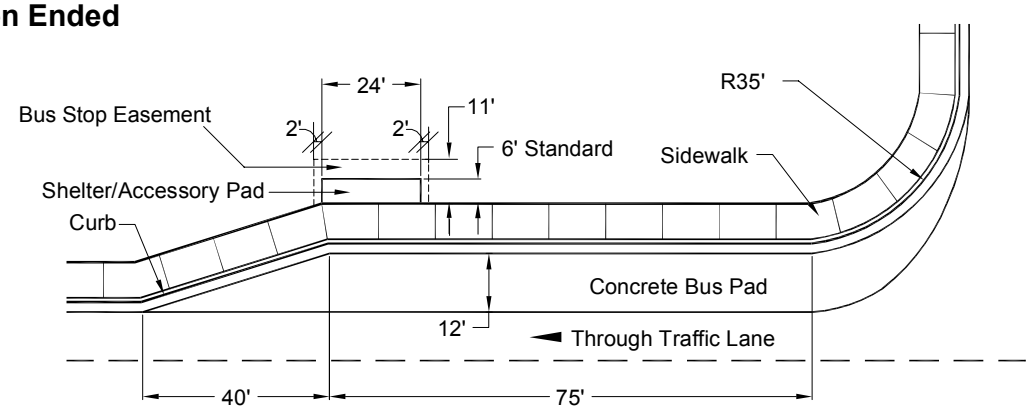

Note: Driveways should be avoided within all bus bays. Under no circumstance should a driveway be placed within the shelter/accessory pad area.

FIGURE 5.6-7. BUS BAY DIMENSIONS

LANDSCAPING

5-6.400

Shade trees and other protective landscaping should be provided wherever possible. This landscaping could be considered part of the development's frontage landscape and could count towards any landscaping requirements that may apply. Considerations for selection and location of landscaping include:

1. Trees should be mature and have an adequate canopy to shade the seating area.
2. Low-water consumption trees and shrubs should be used.

3. Tree location should consider the solar orientation of the transit stop. Priority should be given to shading afternoon summer sun.
4. Transit landscaping should be compatible with other frontage landscaping.

All landscaping needs to be carefully located to not obstruct the visibility of either the transit user or the bus operator. The developer/property owner is responsible for the maintenance of landscaping at bus stops.

5-6.500 SIGNAGE

5-6.501 BUS STOP SIGNS

A bus stop sign is an important passenger convenience, and an operations and marketing tool for transit systems. It serves as a reference for passengers, bus operators, and as a point of identity for the transit system.

The bus stop sign is generally not a traffic sign (except as noted below) since it is not displayed to regulate or warn motorists.

A regional bus stop sign is currently in use throughout the Valley (see Figure 5.6-8 below). The sign is 18 inches wide by 24 inches high, reflectorized for nighttime visibility and is double-faced so that it can be seen from both directions. The upstream side of the sign contains “No Parking” information for motorists approaching the bus stop.

The standard regional sign identifies a location as a bus stop, includes the name and number of the bus route(s) being served, and displays the transit information telephone number.

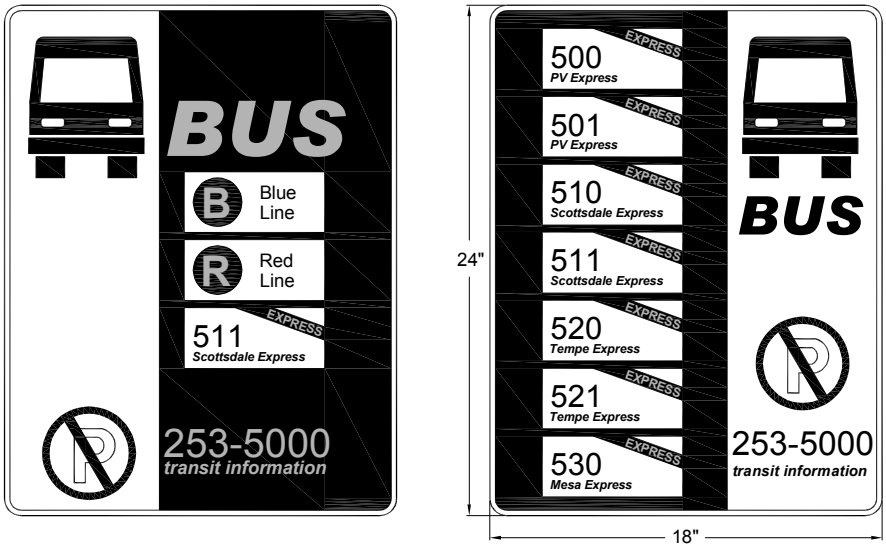

Standard Sign **Custom Sign**

FIGURE 5.6-8. BUS STOP SIGNS

5-6.502 SIGN PLACEMENT

Bus stop signs must be placed at the location where people board at the front door of the bus. In cases where the bus stop sign is incorporated into the design of a transit shelter, the need for a separate sign may be eliminated.

Ideally, bus stop signs should be placed independently of all other signs to maintain the importance of the bus stop identity. Each sign should be installed with its own signpost, although non-wood light poles may be used if it is at the proper stop location and if the sign face is visible from both sides. Signs are not to be placed on wood poles as it poses a hazard to linemen who climb the poles.

Bus stop signs should be installed on signposts or metal poles so that the sign is “flagged.” In other words, the sign should be attached to the post by its edge. This allows both sides of the sign to be viewed without obstruction. The bottom of the sign should be 7 feet above ground level, at least 2 feet from the curb face, and away from obstructions such as landscaping or other signs. The standard regional sign has been designed so that it may be mounted by its edge to a 2-inch post without obscuring the backside message. Where metal street light poles are at the proper location but too close to the curb, the signs may be flagged away from the street. (Figure 5.6-9)

Usually, the city will be responsible for the installation of bus stop signs. For more information, contact the Transportation Department.

SIGN CLEARANCE

5-6.503

Sign clearance dimensions vary by sidewalk / curb relationships, as shown in Figure 5.6-9.

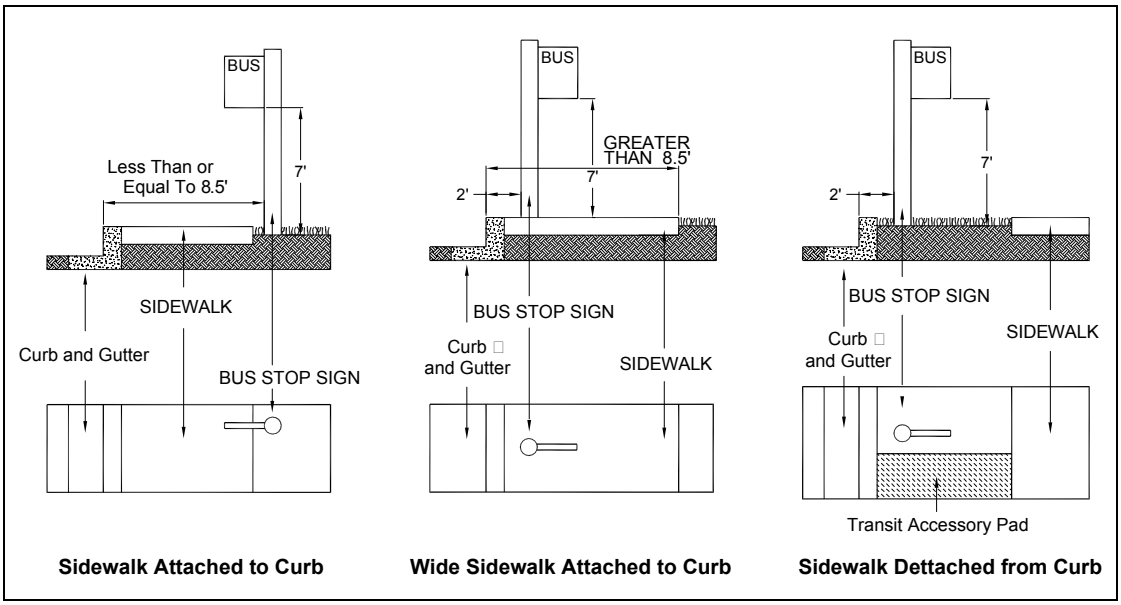

FIGURE 5.6-9. BUS STOP SIGN CLEARANCES

OTHER FACILITIES

5-6.600

At special locations, usually in high activity centers or a focal point of several transit routes, other facilities may be planned. These facilities, such as park and ride lots or transfers centers, are unique and therefore will be planned through discussion and negotiation between the city’s Transportation Department and the developer and/or adjacent property owners/users. In general, the same criteria apply (as well as transit industry standards) for turning radii, passenger loading platforms, parking space requirements, etc.

5-6.700 BUS STOP MAINTENANCE

Well-maintained bus stops are crucial to the image of the transit system. The following applies regardless of who is responsible for the maintenance. Damaged furniture and trash build-up should be addressed immediately to ensure a positive environment for transit patrons and the general public.

Regular maintenance should include:

- Full wash down of shelter and accessories
- Removal of all dirt, graffiti, and pasted material
- Squeegee wipe down of glass surfaces
- Removal and replacement of trash bag
- Litter pick up around stop or shelter/accessories to a distance of ten feet
- Manual or chemical removal of weeds
- Pruning of obstructing tree growth
- Touch up of paint scratches

NOTE: Safety problems should be repaired within twenty-four hours. Repairs that do not pose safety problems should be completed within three days.

5-6.800 SUBMITTAL REQUIREMENTS & REVIEW PROCEDURES

The following facilities must be delineated on all site plans or the preliminary plat submitted to the city:

- Bus bays
- Bus stops
- Shelter sites
- Major transfer centers
- Park-and-ride lots

Transit staff must approve the design and location of the above facilities during the project review process. Bus stop easements need to be completed during the project review process.

Developers may deposit funds in lieu of construction and installation of stipulated transit amenities. The amounts of funds to be deposited are determined during the project review process and are in force upon City Council approval of the project. Fees are to be paid at the One Stop Shop, in Bus Shelter Deposit Account , when other permit fees are paid.

transportation

BIKEWAYS

5-7

This section provides design criteria for bicycle and multiuse paths within the city. It presents information for planning, facility design, traffic controls, bicycle parking, and bikeway maintenance.

Transportation
7447 E Indian School Road
Suite 205
480-312-7696

One Stop Shop
7447 E Indian School Road
Suite 100
480-312-2500

Plan Review
7447 E Indian School Road
Suite 105
480-312-7080

contents

Sections

5-7.000	General Information
5-7.100	Planning Bikeways
5-7.200	Facility Design
5-7.300	Traffic Controls
5-7.400	Bicycle Parking
5-7.500	Maintenance

Figures

5.7-1 to 4	Bike Land Design Standards
5.7-5	Multiuse Path Perspectives
5.7-6 to 8	Ramps & Path Crossings
5.7-9	Avoiding Fixed Objects
5.7-10 & 11	Intersections
5.7-12	Vegetation Clearance
5.7-13 to 15	Multiuse Path Bridges, Tunnels & Underpasses
5.7-16	Ramp Crossings
5.7-17	Vehicle Control Path Entrance
5.7-18 & 19	Bike Lane Markings

GENERAL INFORMATION 5-7.000

COMPONENTS OF BIKEWAY SYSTEM 5-7.001

1. **Bike Lanes**

   Bike lanes are integral sections of a roadway that are marked for exclusive bicycle use and are always one-way.

2. **Bike Routes**

   Bike routes may include shared streets, bike lanes, or multiuse paths, in any combination. Routes may be designated by signing or by placement on a map.

3. **Grade-Separated Crossings**

   Crossings are underpasses or overpasses that serve to isolate motorized and non-motorized traffic from each other at points of intersections.

4. **Multiuse Paths**

   Multiuse paths are paved pathways set aside for the exclusive use of nonmotorized travel and are generally intended for two-way traffic. Paths are typically separate from the road infrastructure.

5. **Multiuse Trails**

   Multiuse trails are unpaved and designed primarily for equestrians. Trails are also open to bicycle and pedestrian travel. See Section 8-3 for trail information.

6. **Shared Streets**

   Shared streets are all streets that do not have bike lanes where bicycles and motor vehicles share the same roadway. This includes all public streets except those specifically posted to prohibit bicycles.

DOCUMENTS AND REFERENCES 5-7.002

The following publications or their current revisions are to be used in conjunction with the design criteria in this book when designing bicycle or multiuse paths for the city of Scottsdale:

- American Association of State Highway & Transportation Officials (AASHTO) Guide for the Development of Bicycle Facilities, 1999.
- City of Scottsdale (COS) Bicycle/Pedestrian Transportation Plan, 1994.
- COS Community Mobility Element of the General Plan, 2001.
- COS Zoning Ordinance, Section 9.100.
- Manual of Uniform Traffic Control Devices (MUTCD) Section IX, Traffic Controls for Bicycle Facilities.
- MAG Regional Bicycle Plan, 1999.
- MAG Regional Off-Street System Plan (ROSS), 2001.
- MAG Uniform Standard Specifications for Public Works Construction.
- COS Supplement to MAG Uniform Standard Specifications for Public Works Construction.

5-7.100 PLANNING BIKEWAYS

5-7.101 LOCATION

It is a goal of the Scottsdale bikeway system to provide facilities on a minimum of a:

- Half-mile grid south of Shea Blvd.
- One-mile grid between Shea Blvd. & the CAP Canal.
- Two-mile grid north of the CAP Canal.

Providing equal grids for both on- and off-street types of bikeways is encouraged, as it will accommodate the widest possible range of users, purposes, and trip destinations. The **COS Bicycle/Pedestrian Transportation Plan (1994)** contains maps of planned on-street and off-street bikeways.

5-7.102 FACILITY SELECTION: ON-STREET

Bike lanes are the most desirable facility for any street with a classification of minor collector or higher. For these streets with higher volumes of traffic, the classification of a street will determine its cross-section (see Section 5-3). Major arterials, minor arterials, major collectors, minor collectors, and certain special neighborhood and rural streets have standard cross-sections that include bicycle lanes. Bike lanes would, therefore, be included on these streets whenever they are built or reconstructed.

For streets that are needed to provide a connection for local or regional bikeway systems, but where a full cross-section with bicycle lanes cannot be accommodated, the following measures should be considered, in order of desirability:

- Edge line stripe with route signs;
- Edge line stripe with no signs;
- Route signs with no edge stripe.

5-7.103 FACILITY SELECTION: OFF-STREET

In planning for off-street multiuse paths, the following hierarchy should apply, starting with the most desirable:

- Ten or twelve foot multiuse path, well separated from streets and in a natural setting;
- Ten or twelve foot pathway, set off from the street by at least ten feet of landscaping;
- Ten or twelve foot multiuse path protected from the street with a traffic barrier & railing.

Connections between different types of facilities are very important to insure an efficient and functional system. In places, multiuse paths may be used to connect sections of roadways that would otherwise dead-end. However, it is critical not to attempt to substitute a path or a sidewalk where bike lanes are warranted. Bike lanes allow direct, higher-speed travel for cyclists, unimpeded by pedestrians. Bike lanes are also one-way, going with the adjacent traffic. Since paths are typically two-way, designing a path to connect with bike lanes and not have cyclists riding the wrong way (against traffic) in one of the bike lanes requires very careful study and design.

Opportunities to provide bicycle access may occur in conjunction with public or private development, greenbelts, canal banks, flood control projects, vista corridors, or anyplace with available open space or rights-of-way. It is the intention of Scottsdale's bicycle planning efforts to remain flexible and open to new opportunities.

5-7.104 EASEMENTS, DEDICATIONS & ABANDONMENTS

In the case of on-street facilities, the bike lane or route is typically located within the street rights-of-way (ROW). Sometimes on-street facilities may need to be connected with short sections of paved path. An example of this would be cul-de-sacs that have only one direct

access to the public street system. Sometimes the cul-de-sac street can be connected to allow bicycle and foot access to reach adjacent streets, paths, trails, or property.

If a private, gated community will cut off functional access for cyclists, means should be explored to maintain a public use easement, on the streets and through the gates, for pedestrians and cyclists.

For off-street paths, the applicant may obtain a ROW through development stipulations or purchase. Any easements or dedications for paths should include a clear statement of maintenance responsibilities for (1) the actual concrete path, (2) any adjacent landscaping or lighting, and (3) for maintaining proper grades and drainage along the path. Dedication of rights-of-way or of public use easements for paths must be noted in the stipulations and on the site plan. This should occur in the Project Review process for new developments.

If the applicant is proposing to change the classification of an existing/planned street, or abandon a street easement or ROW, present and potential pedestrian and cyclist connections shall be reviewed (See Section 3-4). The proposed change will be evaluated against the needs of the bicycle program. If needed, some means of bicycle and/or foot access, such as a public use easement, should be obtained.

FACILITY DESIGN 5-7.200

While every effort has been made to ensure the accuracy and completeness of these guidelines, the city of Scottsdale shall not be held responsible for any errors or omissions. It shall be the sole responsibility of the design engineer to ensure a proper design and the accuracy and completeness of construction documents containing his or her signature.

Any substitutions or exceptions must provide the same functions and be approved by the Transportation Department.

SHARED STREETS AND BIKE ROUTES 5-7.201

It should be assumed that cyclists will ride on all streets, unless such use is expressly prohibited and posted. Many neighborhood streets function quite well as bikeways with no additional signing or marking. If these streets are needed to complete some part of the bikeway system, or to provide a connection for cyclists, the street may be designated by edge stripes, signs, or on a map.

Since cyclists will tend to use the right side of the outside lane, this area should always be built and maintained to accommodate that use. Drainage grates should be designed and installed in a manner that will not trap wheels. Longitudinal cracks, potholes, rough paving, etc., should be eliminated.

BIKE LANES 5-7.202

Streets such as major arterials, minor arterials, major collectors, minor collectors, and certain neighborhood and rural streets have cross-sections that include bicycle lanes. These cross-sections are in Section 5-3.

1. COS bike lanes shall be a minimum of four feet of asphalt from the center of the lane stripe to the edge of the concrete gutter pan. A solid six-inch white stripe will be used to mark off the bike lane. An alternative method is to combine the lane and gutter pan as one concrete strip. In these cases it is desirable to exceed the four-foot minimum, as measured to the face of the vertical curb (Figures 5.7-1 thru 5.7-4).
2. Any grade separation structure should allow the full width of the physical improvements, including standard bike lanes. Also note that most surface streets, even without designated bike lanes or shoulders, usually allow for some “shy distance” or permit an emergency move off the road. Bridges and underpasses with solid barriers alongside often become dangerous constriction points for bicycle travel. Therefore consideration

should be given to maintaining extra width on bridges and in tunnels even if the street does not have bike lanes.

3. In rural areas, a paved shoulder can serve the function of a bike lane, in which case it should have a minimum of five feet of paving. A bicycle lane can also be delineated with striping between an area for parallel parking and a traffic lane. In this case the bicycle lane should be at least five feet (see Figure 5.7-3).
4. Whenever a half-street is constructed, if the ultimate street classification has a cross-section with bike lanes, then the half-street construction should also provide a bike lane on each side.
5. Parking is not permitted in marked bicycle lanes.
6. Raised pavement markers or curbing should never be used to delineate bike lanes.
7. Figures 5.7-1 thru 5.7-4 give examples of bike lane configurations for various situations. These cross sections are compatible with Section 5-3, Geometrics.
8. For additional information concerning bike lanes and routes not covered in this manual, please refer to the AASHTO Guide for the Development of Bicycle Facilities, 1999.

A. Curbed Street Where Parking is Prohibited

- 4 foot lane is exclusive of curb and gutter.

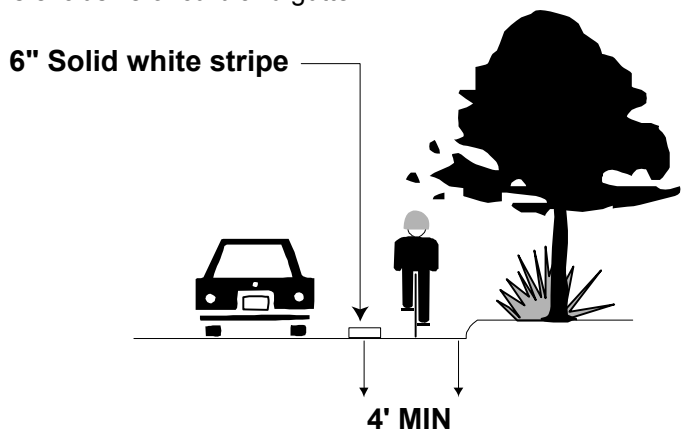

FIGURE 5.7-1. BIKE LANE WHERE PARKING IS PROHIBITED

B. Wide Curb Lanes

- Monolithic concrete curb, gutter and bike lane. No longitudinal joints.

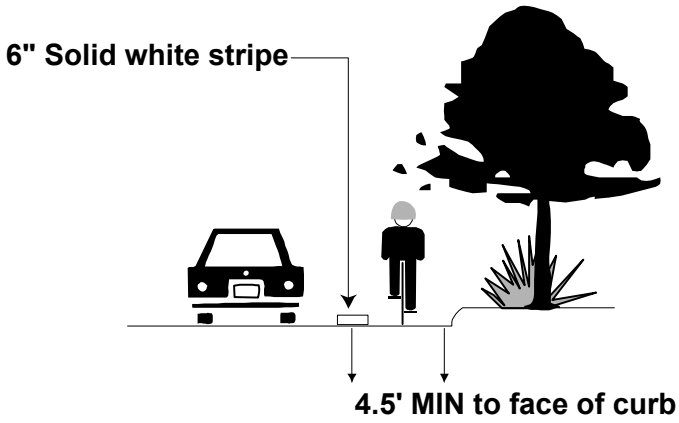

FIGURE 5.7-2. BIKE LANE WITH WIDE CURB LANES

C. Street with Paved Shoulder

4 foot lane is exclusive of curb and gutter.

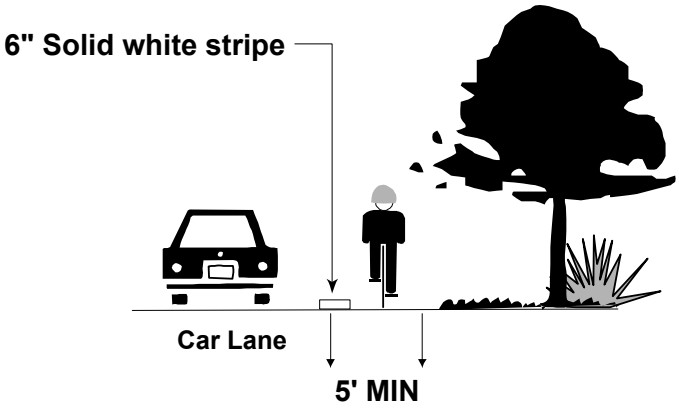

FIGURE 5.7-3. BIKE LANE WHERE PAVED SHOULDER

D. Curbed Street with Parking

4 foot lane is exclusive of curb and gutter.

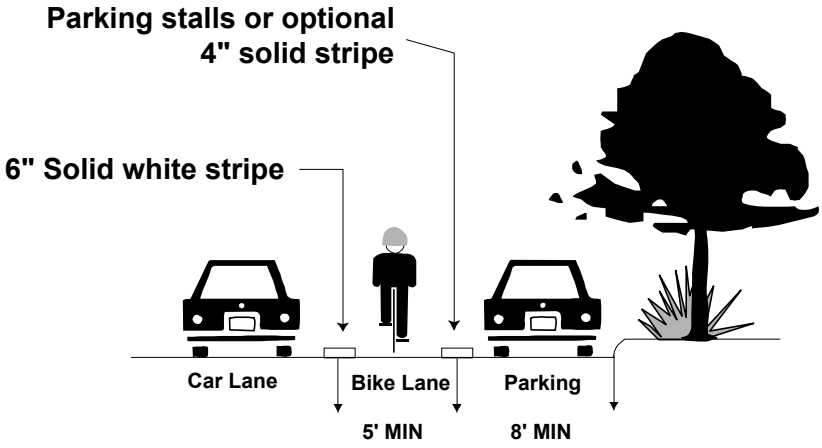

FIGURE 5.7-4. BIKE LANE WHERE PAVED SHOULDER

MULTIUSE PATHS

5-7.203

1. Operation and use of multiuse paths are covered by COS Revised Code, Article IV, Chapter 17.
2. COS Standard Details for Multiuse paths are available online at www.scottsdaleaz.gov/design/DetailDrawings/SD2200Series.asp, details 2281 - 2285.
3. Placement of a multiuse path may correspond/overlap with a trail underpass. Refer to the **COS Trails Master Plan** to verify trail underpass locations and design standards.

4. For additional information not covered in this manual, please refer to the AASHTO Guide for the Development of Bicycle Facilities, 1999. This guide provides technical information on minimum radii for curves, grades, sight distances, and stopping sight distances under various conditions.

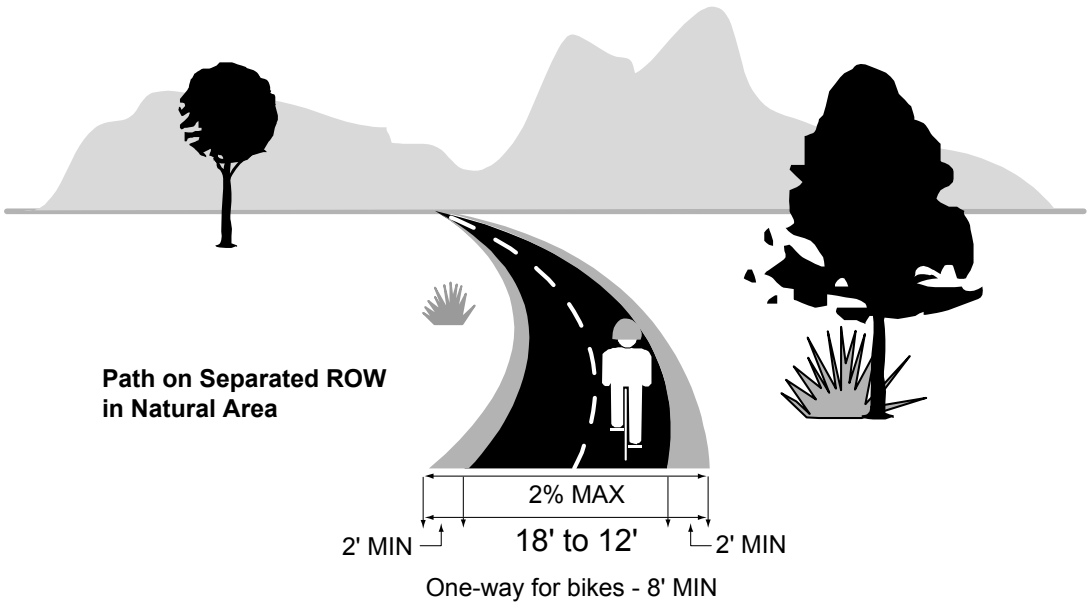

Path Separate but Near Roadway

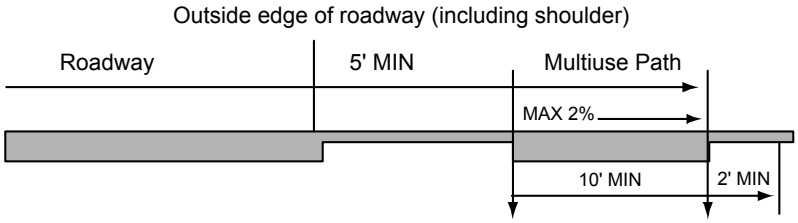

Path Next to Roadway

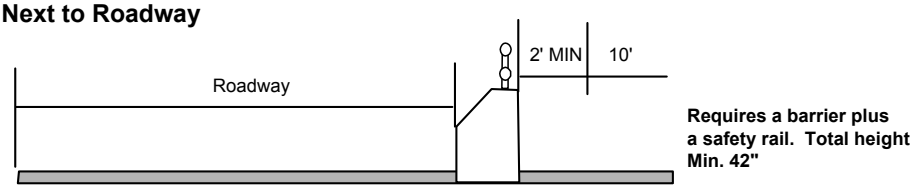

FIGURE 5.7-5. MULTIUSE PATH PERSPECTIVES

A. Multiuse Path Requirements

1. The path should have a minimum design speed of 20 mph.
2. The path should have a typical width of ten feet with a two-foot shoulder on each side.
3. There should be a width of eight feet where paths can be paired so each can have one-way travel, plus two-foot shoulders.
4. There should be a width of twelve feet where heavy use is expected, especially with a high percentage of pedestrians/skaters.
5. There should be a medium broom finish on the surface. It is desirable to provide traction, but not to a degree that impedes skaters.
6. There should be material for the shoulders that can allow for recovery if a user runs off the path. Substances such as turf, decomposed granite, exposed aggregate, or various ground covers are appropriate. No spiny/thorny plants.
7. Landscaping beyond the two-foot shoulders shall not consist of vegetation that are spiny/thorny or that have horizontal growth patterns which could encroach onto the path.
8. Irrigation systems shall be installed in a manner that will not result in water spraying onto or across the path.
9. The area should be clear of fixed objects such as poles or tree trunks for another three feet beyond the shoulder
10. Handrails for paths or bikeways should be minimum 42 inches in height and be flared at the ends.
11. There should be a vertical clearance of 8 feet over the path and shoulder areas (see Figure 5.7-12).
12. Vertical clearance in tunnels should be 10 feet (see Figure 5.7-14).
13. There should be grades of five percent or less. Where this is not feasible, refer to the AASHTO Guidelines. The Transportation Department will make the final decision. Maximum side slope is two percent.
14. Alignment should be as linear as possible; avoid compound curves (see Figure 5.7-9). Unnecessary meandering reduces the effective width of the path, can create sight distance problems, and increases possibility of users running off the path.
15. Adjacent grades should always direct water away from the path surface, such as using a small swale on the up slope side.
16. Provision in underpasses shall keep nuisance water off the path, and allow the water to rapidly drain or be removed. One solution is a small channel constructed with a sloping side, built on one side of the tunnel. Sump pumps are needed in areas prone to flooding. See Figures 5.7-14 and 5.7-15.
17. Underpasses should be lighted.
18. Path ramp design requires that the pan for any curb ramp shall be as wide as the path. The ramp should be aligned with the path, and not require users to make sudden swerves, or to be directed towards oncoming traffic. See Figures 5.7-6 through 5.7-8.
19. Signage providing general location information should be located at a minimum of 1/4-mile intervals. Placement of these signs should be on or adjacent to the path. Contact the Transportation Department for specifics.

Path Crossing at Corner Continuing Straight

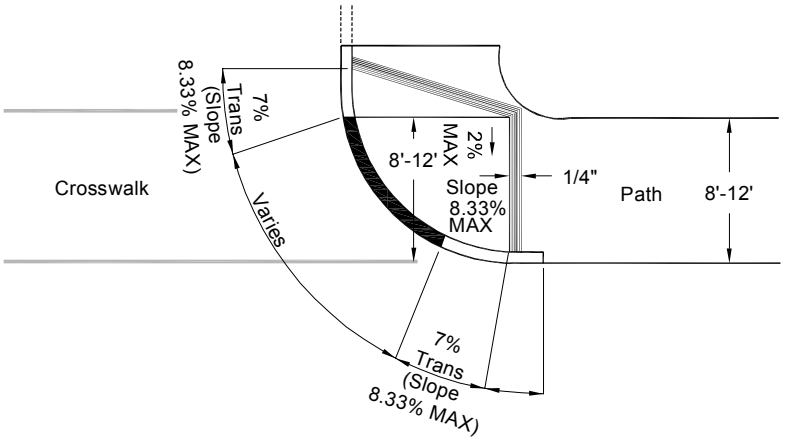

Examples:

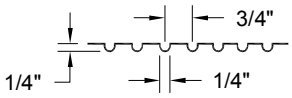

Grooving Detail

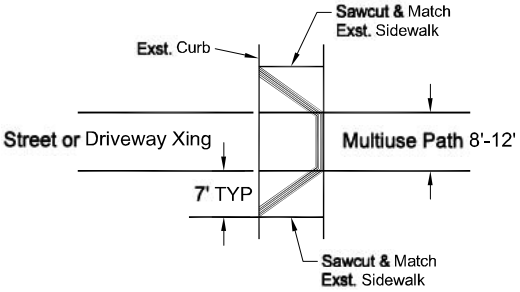

Where a small elevation change occurs on a path, such as crossing a curb to enter a street, the design shall meet the following:

- The width of the path (minus shoulders) shall equal the width of the center portion of the ramp (minus wings)
- The edges of the path, ramp and any crosswalk shall be a straight line.

FIGURE 5.7-6. RAMPS FOR MULTIUSE PATH

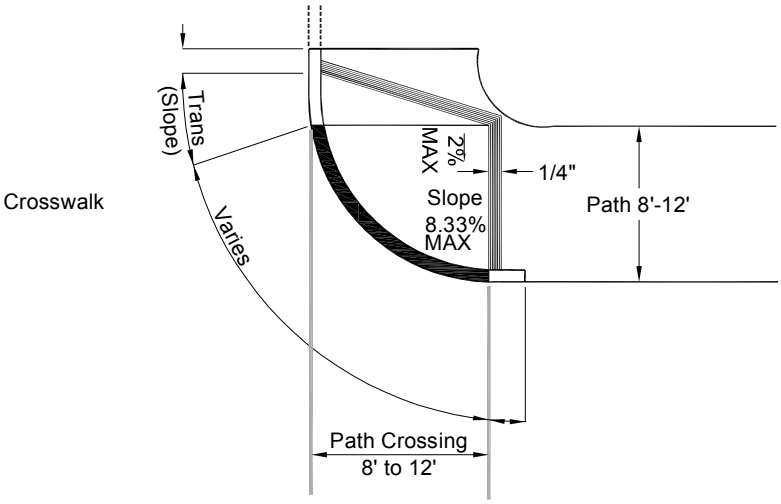

FIGURE 5.7-7. PATH CROSSING AT CORNER THEN TURNING

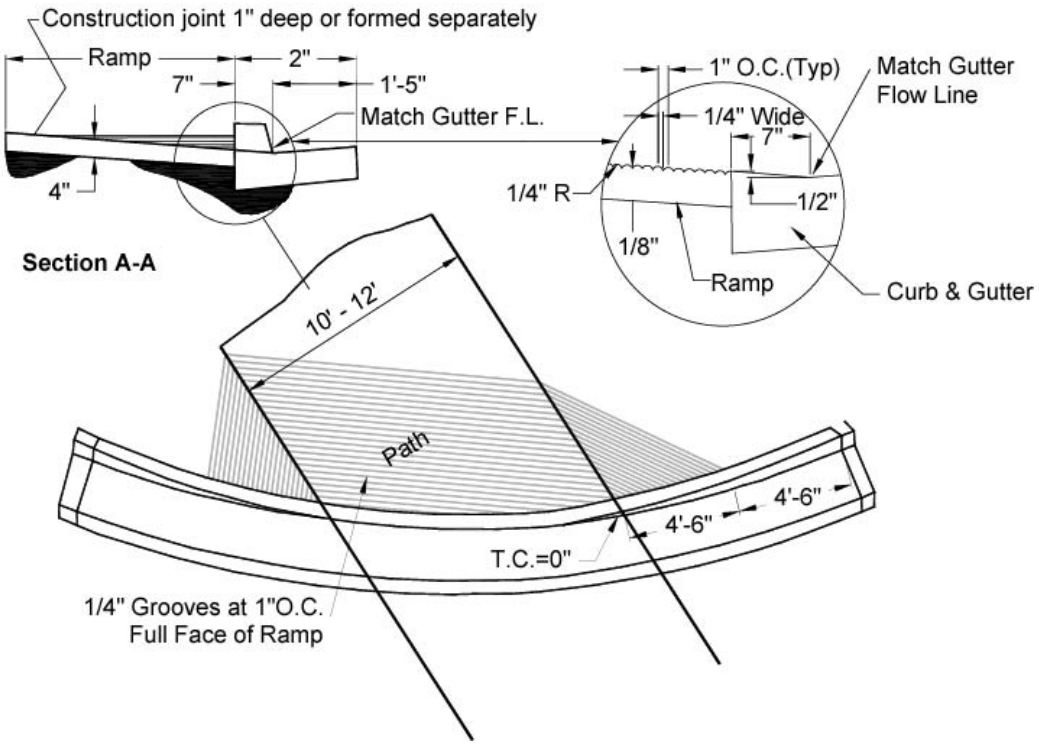

FIGURE 5.7-8. PATH FORCED TO COME TO CORNER AT ANGLE

Paths shall be constructed to be as linear as possible.
Avoid compound curves.

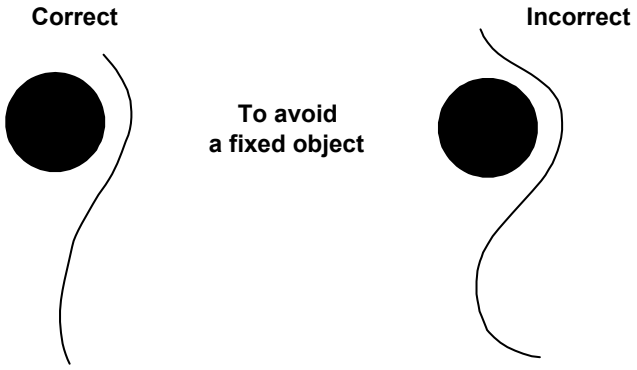

FIGURE 5.7-9. AVOIDING FIXED OBJECTS

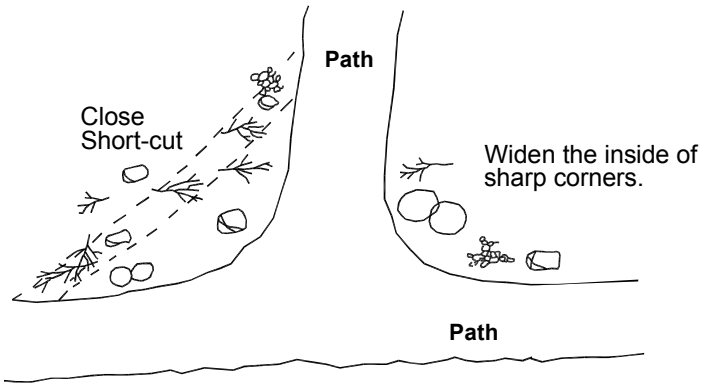

- Use proper signage and wider inside curves.
- Maintain landscape for sight distance.

FIGURE 5.7-10. PATH – PATH INTERSECTIONS

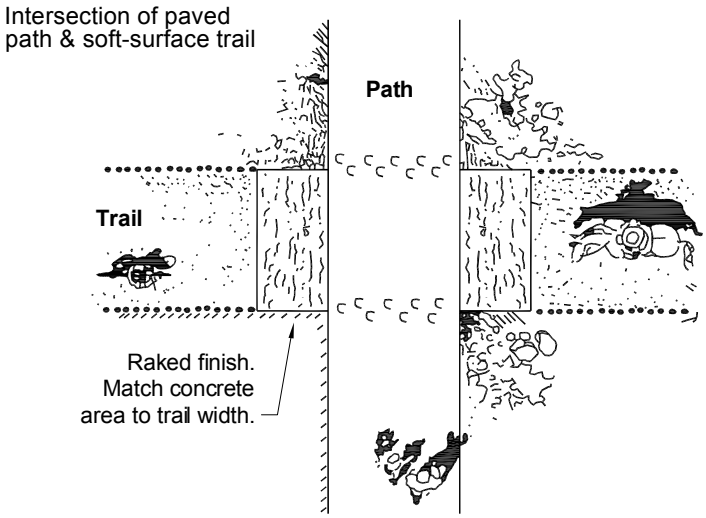

- Use a concrete transition between trail and path to prevent dirt drag-out.

FIGURE 5.7-11. PATH – TRAIL INTERSECTIONS

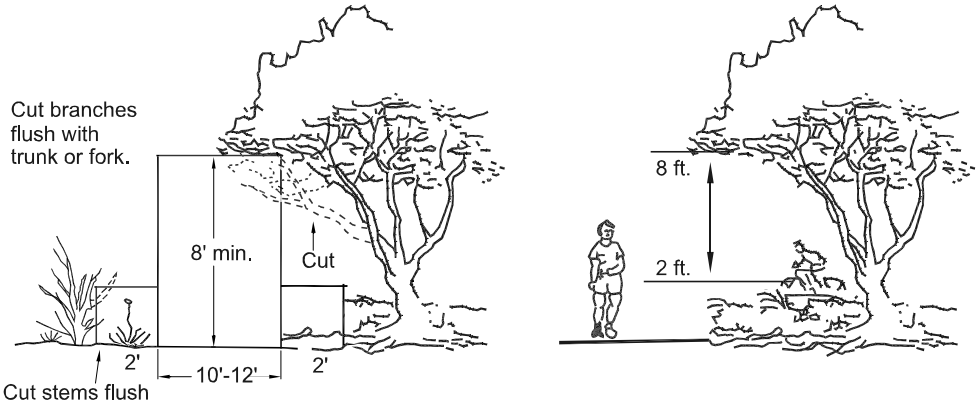

FIGURE 5.7-12. PATH VEGETATION CLEARANCE

B. Other Special Conditions

Every attempt should be made to avoid having a multiuse path directly adjacent to a street. If this is unavoidable, try to achieve a separation of at least five feet, with landscaping. If the path and street separation will be less than five feet, then a combination vehicular and bicycle railing and traffic barrier must be used. The top of the barrier and rail must be at least 42 inches. These railings perform the dual function of retaining both vehicles in the street and cyclists on the path (see Figure 5.7-5). For path/street intersections, use grade-separated crossings (either over or underpasses) where feasible.

The majority of these crossings will be at-grade. However, certain design practices can greatly improve these at-grade crossings, whether or not they are mid-block, controlled intersections, or driveway exits. Some practices found helpful in Scottsdale include making crossings of contrasting material, striping each side of the crossing, restricting median bullnoses from the path, or elevating the path on a speed table. See Figures 5.7-6, 5.7-7, 5.7-8, 5.7-15, and COS Standard Detail 2281.

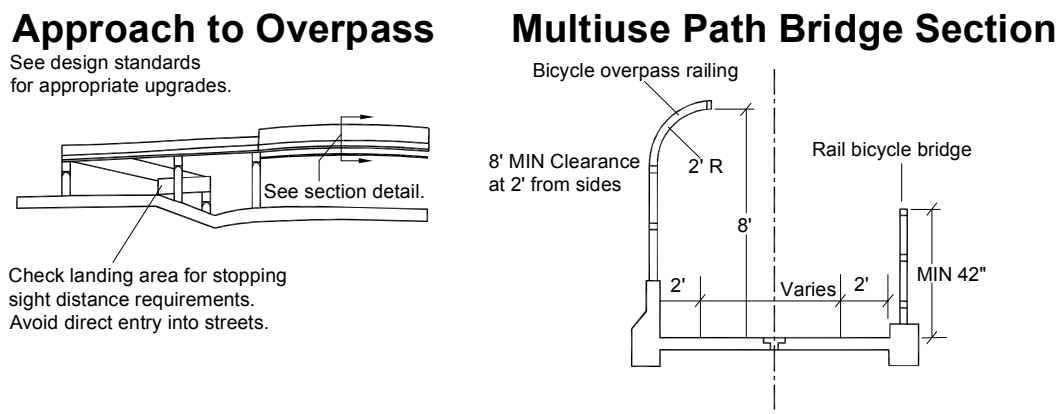

FIGURE 5.7-13. MULTIUSE PATH – BRIDGES

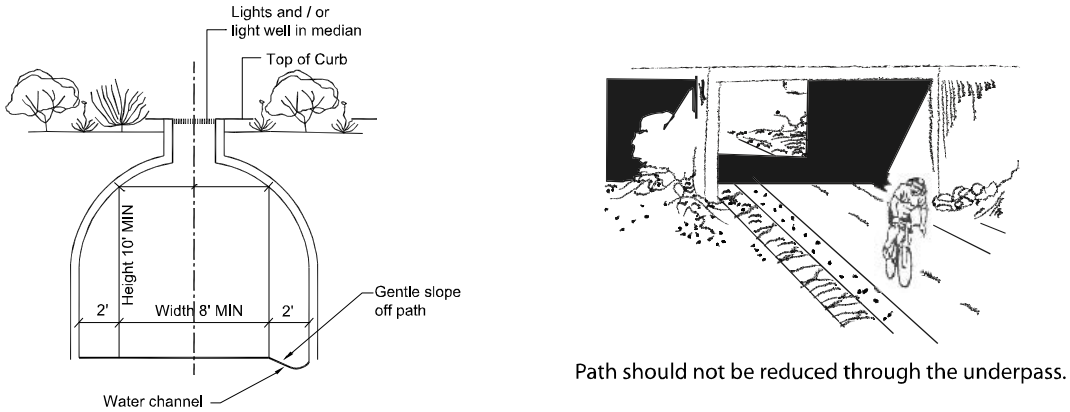

FIGURE 5.7-14. MULTIUSE PATH – TUNNELS

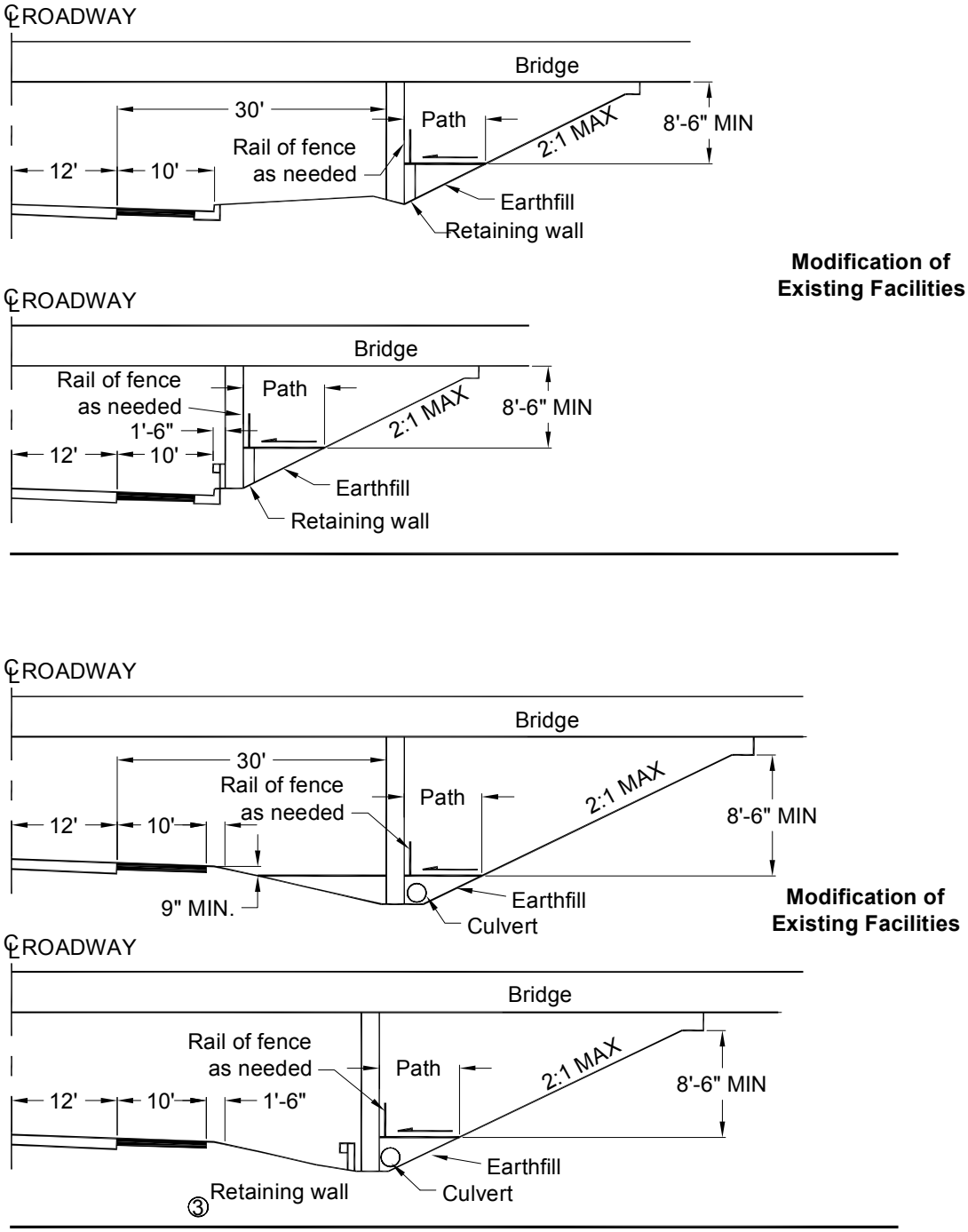

FIGURE 5.7-15. MULTIUSE PATHS UNDER BRIDGE STRUCTURES

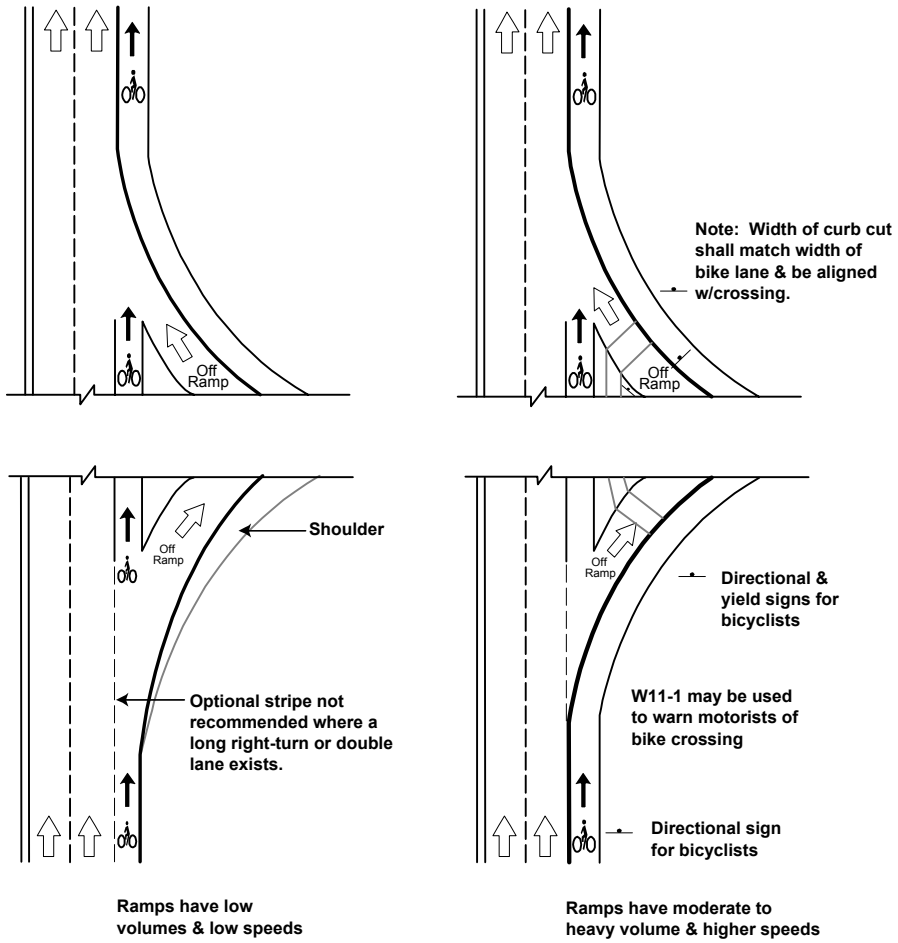

FIGURE 5.7-16. RAMP CROSSINGS

RIDING SURFACES 5-7.204

Drain grates can be a serious potential hazard to trapping wheels. Careful attention should be paid to the choice and installation of drain covers. There are MAG and COS Standards that are applicable. Gaps between the grate and its frame should not exceed ¼ inch.

Paving for bike lanes should meet MAG standards for surface smoothness of asphalt paving.

Rumble strips, raised pavement markers, or raised curbs should never be used to delineate bike lanes or multiuse paths. They should also never be placed in bikeway crossings.

Multiuse path finishes are dependent upon path construction material:

1. Paths constructed of Portland cement concrete will have a medium broom finish. The width of expansion joints should be minimized, and the joints tooled with a small radius. Portland cement concrete is desirable for paths that intersect with wash areas or areas that experience flooding or considerable pooling of water.
2. Paths constructed of asphalt concrete pavement shall conform to Section 343 of the city of Scottsdale Supplement to MAG Specifications. Installing asphalt concrete supports the use of print paving for decorative pavement enhancements to features such as paths, crosswalks, and medians. Asphalt concrete shall include an epoxy-coated surface. Asphalt concrete is desirable to obtain certain aesthetics suitable to the surrounding area.

5-7.300 TRAFFIC CONTROLS

5-7.301 SIGNS AND MARKINGS

Traffic control devices for cyclists, whether they are for an on- or off-street system, must adhere to the same five basic requirements for motorists:

- Fulfill a need
- Command attention
- Convey a clear, simple meaning
- Command respect from users
- Give adequate time for a proper response

The use of colors should conform to code specifications for signs and markings:

- Yellow – General Warning,
- Red – Stop or Prohibition,
- Blue – Service Guidance,
- Brown – Recreation,
- Black – Regulation,
- White – Regulation.

See Figure 5.7-17 for an example.

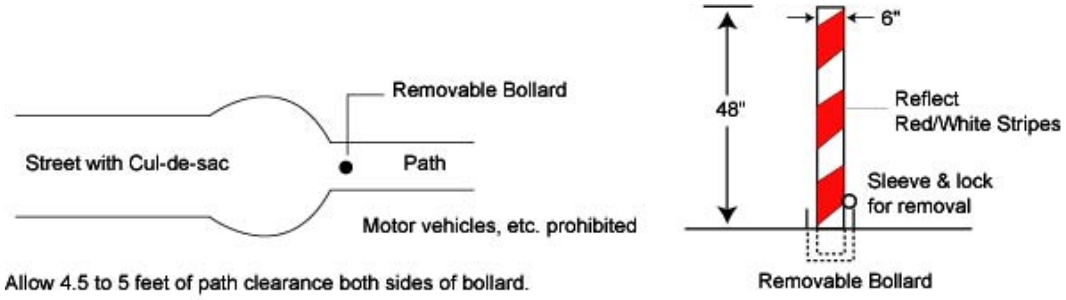

FIGURE 5.7-17. VEHICLE CONTROL PATH ENTRANCE (WHERE NEEDED)

All regulatory, warning and route marker signs shall be provided in accordance with the standards in the Manual on Uniform Traffic Control Devices, Section IX. In addition, the city of Scottsdale has developed some signs for particular situations; see COS Details # 2281, 2282, and 2284.

Signing and marking for bike lanes is shown in Figures 5.7-1 – 5.7-4 and Figures 5.7-16 and 5.7-18. Paths and multi-use paths are shown in Figures 5.7-16 and COS Details # 2281, 2282, and 2284. Other information is in the AASHTO Guidelines.

For bike lanes, pavement markings shall consist of a directional arrow and a bike/rider symbol. In urban areas, pavement markings shall be placed 50 to 75 feet after every major intersection, or at ¼ mile intervals, whichever is less. In rural areas, the distance may change as judged appropriate by the COS Transportation Department.

Where a bike lane continues past the left side of a right-turn-only lane, a pair of pavement symbols shall be placed in that continuation.

On leaving an intersection, the lane stripe should start at the crosswalk or where the crosswalk would be. Approaching an intersection, if the volume of right turns is heavy, then the stripe should be dropped 50 -75 feet before the intersection.

Paint and thermoplastic stripes or markings used for lanes, routes, or paths should be reflective and highly non-slip.

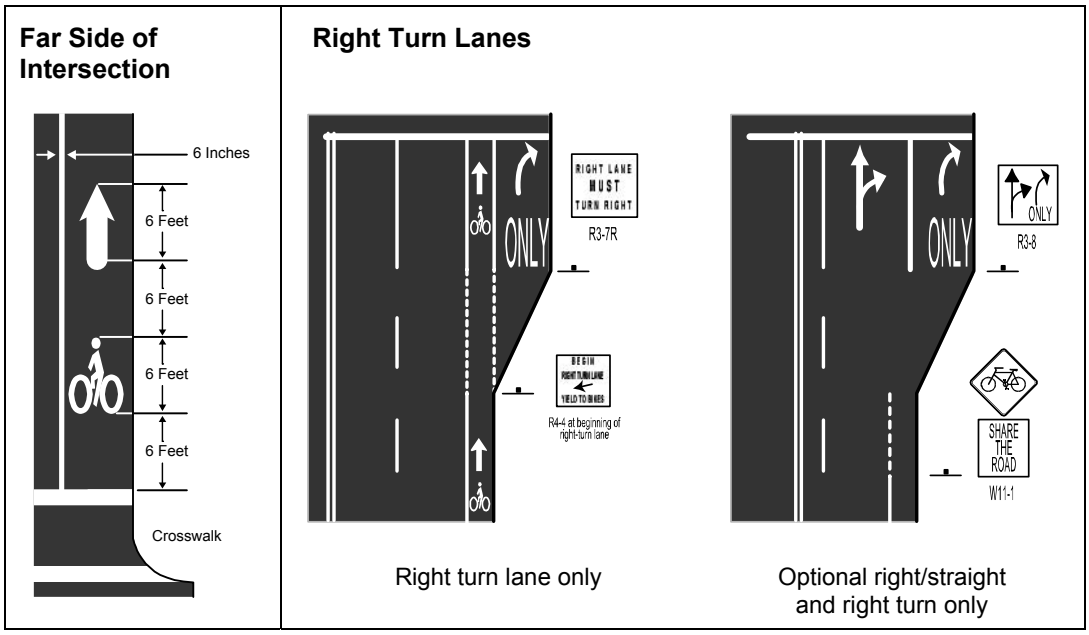

FIGURE 5.7-18. BIKE LANE MARKINGS

DETOURS & CONSTRUCTION 5-7.302

A. Public information

Any signage, publication, map, web posting, public service announcement, or other information dealing with any construction closure, restriction, or change, shall always include any expected effects on cyclist or pedestrian movements. This includes, but is not limited to, changes in the operation of sidewalks, multiuse paths, bike lanes, or any other bikeways.

Ideally, detours should be found or built, and well signed. Bikeway detours should only be used when the same type of facility can be provided, e.g., a bike lane directed to other lanes or shoulders, or to a suitable shared street. Path detours should be directed to another path or suitable sidewalk, not to an on-street facility.

B. Shared Streets, Bike Lanes, and Multiuse Paths

If a bike lane is closed, it shall be signed “Bike Lane Closed” and also signed “Bikes on Roadway” for the portion where cyclists will be forced to use the traffic lane. This applies to shoulders with high bicycle use, as well as cases where the work is confined to the bicycle lane.

If the traffic lanes are narrowed for construction detours, so that a car and bicycle cannot safely pass side-by-side, then cyclists and motorists should be directed as in the previous paragraph.

Special attention needs to be paid to work, such as utility, which takes place only in the bike lane or shoulder area. Sometimes precautions are ignored because the vehicular traffic is not affected. However, proper signing and barricading, with lights for night warning, is still essential. Irregular surfaces, such as raised metal plates on shoulders or hoses laid across paths, can be especially hazardous and must always be well barricaded.

Signing and barricading should anticipate night use and speeds up to 25 mph. Barricades and signs should be posted at points where people are able to choose an alternate route.

When not in use, barricades, signs, etc., should not be placed or stored in bike lanes or on shoulders or paths.

Bike lanes/shoulders shall always be restored to an excellent paving condition. MAG Standard 321.5.4, Asphalt Base and Surface Course, should apply.

5-7.400 BICYCLE PARKING

The city of Scottsdale Zoning Ordinance, Section 9.103, specifies bicycle parking requirements (www.scottsdaleaz.gov/codes/zoning).

Bicycle parking shall be located within fifty feet of the main entrance(s), in a convenient, highly visible location. Ideally, the bicycle parking will be more convenient to destinations than the motor vehicle parking. On a site with several businesses, bike parking should be dispersed so as to be convenient to individual entrances. A portion of the required parking may be located by an employee entrance.

The COS Standard Detail # 2285 bike rack is designed to provide:

1. Secure support for the entire frame of the bike by allowing numerous contact points with the frame and one wheel, with those points being spread out both horizontally and vertically. These contact points are all in one plane. This helps prevent damage to paint, eliminates metal points that could stick out to cause damage or injury, and the bicycle is prevented from sliding down or flopping over.
2. Accommodation of any size or type of bicycle with any type of luggage or equipment. The bicycle does not have to be lifted up or supported by a kickstand.
3. Ease of use, and manner of use, is clear without instructions. (A poor design; e.g., the “ribbon” rack; leads to misuse: this rack is designed for bikes to be placed perpendicular to the rack, but the first person usually places her/his bike parallel across the openings.)
4. Secure locking with any type of lock or cable, including the “U” locks. If the front wheel is removed and repositioned, then it should be possible to lock the frame and both wheels to the rack. The rack should not require that the lock be fastened close to the bicycle chain.

The city rack may be painted, and may be placed on concrete, turf or gravel. It may be used as singles, doubles, or in rows. Each loop accommodates two bikes.

5-7.500 MAINTENANCE

On-street bikeways will be maintained by Field Services as part of their regular street sweeping and maintenance program. Special attention should be given to drain grates, utility covers, and any surface irregularities.

Off-street bikeways responsibility for the maintenance of a new path shall be determined at the time of dedication, purchase, or granting of easement.

Regular maintenance should include:

1. Sweeping
2. Removing all dirt, graffiti, and pasted material
3. Displaying warning signs when water is present or flooding imminent
4. Cleaning up after flooding
5. Picking up litter
6. Removing weeds
7. Pruning to maintain proper clearances (see Figure 5.7-12).
8. Periodically removing silt to maintain low flow channels away from path

transportation

PEDESTRIAN FACILITIES

5-8

This section is being developed and currently provides resources for pedestrian facility planning and design. It provides guidance for pedestrian connections, safety, and additional information on accessibility, including curb ramps.

Transportation
7447 E Indian School Road
Suite 205
480-312-7696

contents

Sections

5-8.000 General Information
5-8.100 Multiple Pedestrian Connections
5-8.200 Pedestrian Safety
5-8.300 Curb Ramps

PEDESTRIAN FACILITIES

GENERAL INFORMATION 5-8.000

The city of Scottsdale is dedicated to improving the quality of life for its citizens by enhancing their mobility choices and enjoyment of the community. Pedestrians are an integral part of the transportation system because all people are pedestrians at one time or another. For example, a driver becomes a pedestrian upon leaving a vehicle. Public transportation users are pedestrians when they walk to a transit stop and again when walking to their final destination. Planning for the needs of pedestrians is an essential element of providing an efficiently functioning transportation system.

In general, people will choose to walk a 10-minute trip or ¼ mile to a destination, and even longer (up to 20 minutes or ½ mile) if the route is comfortable and safe or if the need is great. Site planning should consider walking distance of pedestrians from nearby transit routes or other adjacent locations, such as employment centers or residences. Like all transportation users, pedestrians seek direct, convenient travel routes.

Pedestrian facilities should provide accommodations for a wide array of users, including but not limited to walkers, joggers, wheelchair users, strollers, rollerbladers, bicyclists, and equestrians. These pedestrian facilities need to be universally accessible, safe, convenient, direct, and designed to encourage use by this wide variety of potential users.

Minimizing curb cuts and consolidating driveways helps to maintain continuity of pedestrian routes and helps to ensure pedestrian comfort and safety. In addition, pedestrians like to be separated from moving traffic with a buffer, such as on-street parking, landscaping, or bicycle lanes. Walkways should be designed with sufficient capacity dependent on the anticipated level of use, intensity and speed of adjacent traffic, and the number of obstacles (such as utility poles, magazine stands and street furniture) within the walkway. An effective walkway width (width of walkway useable for pedestrian travel) of at least 6 feet is required; a minimum effective walkway width of 8 feet or more is desirable in areas which will experience high pedestrian travel.

MULTIPLE PEDESTRIAN CONNECTIONS 5-8.100

In an effort to improve mobility and reduce congestion, multiple pedestrian options may often be desirable. For example, if three potential alternatives or alignments are available to connect pedestrian destinations, many times two or all three may be chosen if it is likely to improve access, increase pedestrian use, and reduce vehicular trips. The need for multiple options will be dependent upon the cost, benefit, and convenience of the alternatives available as determined by the Transportation Department.

PEDESTRIAN SAFETY 5-8.200

Pedestrian facilities should provide short direct access by connecting through cul-de-sacs, parks, shopping centers, dead-end streets, drainage easements, and other locations that will facilitate and encourage non-motorized travel for short trips. Pedestrian facilities should include a wide variety of choices for pedestrians to improve their safety, especially when

crossing vehicular roadways. These improvements may include grade-separated crossings of high speed, high volume vehicular corridors (especially in planned or existing drainage corridors); pedestrian refuges; and signalized pedestrian push buttons on warranted signals. In addition, detectable warning devices ("truncated domes") should be installed at locations where it is likely that pedestrians could enter into a vehicular area, such as at pedestrian curb ramps and raised pedestrian crossings. In order to improve safety and encourage use, sidewalks and multi-use paths should be placed away from the back of curb a minimum of 4 feet, with 8 feet desired, and sometimes greater distances based on available rights-of-way or easement. On roadways with transit routes, the sidewalk should be brought closer to the roadway to allow boarding and deboarding at transit stops.

5-8.300 CURB RAMPS

Curb ramps shall be placed wherever a pedestrian access route crosses a sidewalk/street transition; at intersections, medians and alleys; and where a public sidewalk ends and pedestrian travel continues on the roadway. Curb ramps shall by wholly contained within the crosswalk markings, if they exist. Curb ramps should be flush with the street surface without "lips." Alterations in retrofit development areas shall follow guidelines for new construction unless technically infeasible as determined by the Transportation Department.

One of the ways the city is trying to improve pedestrian access and safety is by requiring the use of directional ramps at all intersections. Per the COS Details, directional ramps are preferred and should be installed at all intersections where there is room for both the ramps and the required 4-foot landing area. Where there is not room for the full directional ramp treatment, diagonal ramps with a minimum 8-foot width and 4-foot landing are acceptable; however, if there is not room for the landing, a blended transition ramp should be used. Detectable warning devices (truncated domes) should be installed in conjunction with these ramps.

Developers, staff and other interested parties are encouraged to reference the following two documents:

- Design Sidewalks and Trails for Access, Part 1 and Part 2, **Best Practices Design Guide**, Barbra McMillen, et. al, U.S. Department of Transportation, Federal Highway Administration, Publication No. FHWY-EP-01-027 HEPH/8-01 (10M) E, September 2001. Available from FHWA Report Center by e-mailing report.center@fhwa.dot.gov.
- **Draft Guidelines for Accessible Public Rights-of-Way**, Access Board, June 17, 2002. Available online at www.access-board.gov.

The Transportation Department is available to answer questions or to discuss applications to specific circumstances or designs.

transportation

NEIGHBORHOOD TRAFFIC MANAGEMENT

5-9

This section is currently being updated and presents the process and criteria for reviewing and resolving neighborhood traffic concerns. It identifies the goals of this program and options for resolving conflicts.

Transportation
7447 E Indian School Road
Suite 205
480-312-7696

Citizen & Neighborhood Resources
7447 E Indian School Road
Suite 300
480-312-3111

One Stop Shop
7447 E Indian School Road
Suite 100
480-312-2500

Plan Review
7447 E Indian School Road
Suite 105
480-312-7938

contents

Sections

5-9.000 General Information
5-9.100 Goals
5-9.200 Procedures

Figures

5.9-1 NTMP Flowchart

NEIGHBORHOOD TRAFFIC MANAGEMENT

GENERAL INFORMATION 5-9.000

Continued growth in Scottsdale and the region has increased Scottsdale residents' concerns regarding traffic, specifically in neighborhoods. In order to promote safe and pleasant conditions for residents including motorists, bicyclists, pedestrians, schoolchildren, and other users on neighborhood streets, Scottsdale's Transportation Department has created a Neighborhood Traffic Management Program (NTMP).

One component of the quality of life expected by Scottsdale residents is the safe, efficient and economical movement of people and goods. The goal of the NTMP is to use the three "Es" (Education, Enforcement and Engineering) to address the transportation concerns of residents who are negatively impacted by vehicular traffic in their neighborhood.

APPLICATION 5-9.001

Application of the NTMP shall be limited to local, paved, public streets that:

- Have or are planned to have no more than one travel lane in each direction and
- Function primarily to connect an origin or destination to an arterial (local residential & some minor collectors).

REFERENCES 5-9.002

- MAG Standard Drawings - Maricopa Association of Governments (MAG)
- COS Supplement to MAG - city of Scottsdale (COS)
- Roundabouts: An Informational Guide - Federal Highway Administration
- Traffic Calming: State of the Practice - Institute of Transportation Engineers
- Manual on Uniform Traffic Control Devices - Federal Highway Administration
- A Policy on the Design of Highways and Streets - American Association of State Highway and Transportation Officials

GOALS 5-9.100

The city of Scottsdale has developed its Neighborhood Traffic Management Program (NTMP) with the following goals:

1. Minimize the negative impacts of traffic in neighborhoods through the ongoing monitoring and improvement of the overall transportation system.
2. Work to ensure that proposed land uses, and their associated travel demands, do not negatively impact surrounding/adjacent residential neighborhoods.
3. Protect Scottsdale's residential neighborhoods from "unwanted" vehicle traffic. "Unwanted" vehicle traffic is defined as any one of the following:
   - Traffic operating at excessive speeds,
   - Vehicles with an origin and destination outside the neighborhood,
   - An excessive volume of traffic on a residential local or collector street.

4. Balance the often-conflicting needs of calming traffic and maintaining emergency response capability. Emergency vehicle access must be preserved.
5. Address resident traffic concerns while minimizing any negative affects to other citizens and neighborhoods.
6. The NTMP should encourage and enhance bicycle, pedestrian, and other non-motorized travel modes.
7. NTMP will accommodate direct bicycle, pedestrian, and other non-motorized access through drainage channels, dead ends, walls, cul-de-sacs, open space, and other barriers in order to reach neighborhood destinations such as homes, schools, parks, libraries, retail centers, civic spaces, and trip generators. Generally, an easement is all that is required for these purposes.
8. The NTMP is not designed to address dangerous intersections, mitigate noise, or to redesign the overall transportation/street classification system, as these concerns should be addressed separately.
9. Achieve broad-based citizen participation, which is an essential element in the development of an effective Neighborhood Traffic Management Program.

More information is available online at www.scottsdaleaz.gov/safety/speed/.

5-9.200 PROCEDURES

Traffic calming requests will be initially forwarded through the Speed Awareness Program (SAP) within the Citizen and Neighborhood Resources Department (CNR). The SAP coordinator will then forward traffic calming requests that need further attention to Traffic Engineering for review.

Traffic Engineering will then make recommendations as to the issues, potential remedies, and procedures.

All traffic calming requests related to development activity will be reviewed by Transportation Department as part of the development review process. Developers are not to make proposals directly to residents without consulting Traffic Engineering. Traffic Engineering will review and make recommendations that may include:

- Design mitigation
- A formal Traffic Impact Mitigation Analysis (TIMA) process – see Section 5-1
- Neighborhood meetings
- Review by Transportation Commission

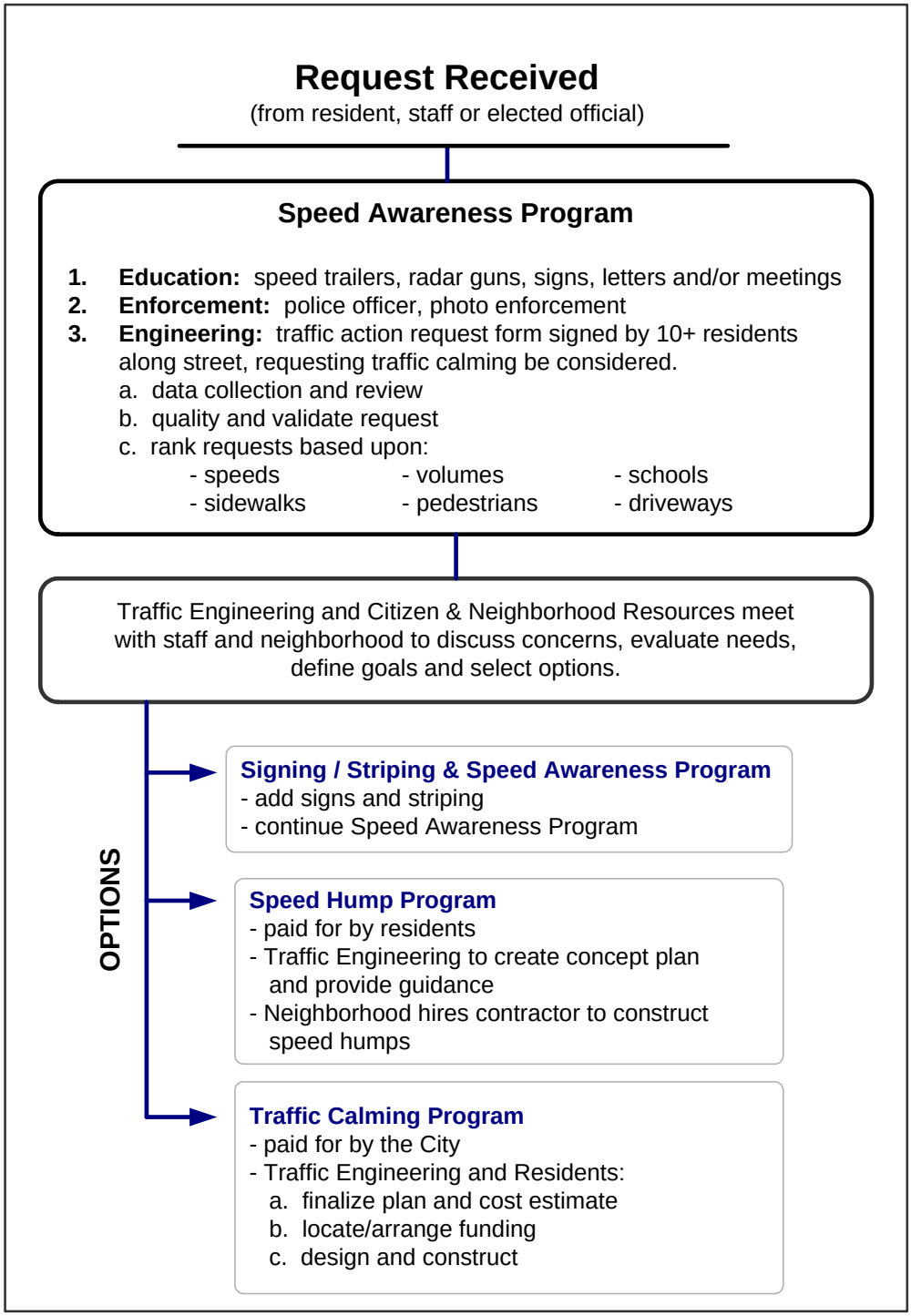

FIGURE 5.9-1. NEIGHBORHOOD TRAFFIC MANAGEMENT PROGRAM FLOWCHART

transportation

FLEXIBLE PAVEMENT

5-10

This section describes procedures for designing structural sections of flexible pavements constructed within the city's public rights-of-way. Developers of private property normally do this construction as a condition of development as stipulated by the city.

Transportation
7447 E Indian School Road
Suite 205
480-312-7696

One Stop Shop
7447 E Indian School Road
Suite 100
480-312-2500

Plan Review
7447 E Indian School Road
Suite 105
480-312-7080

contents

Sections

5-10.100 Asphalt Concrete Course
5-10.200 Soil Testing Requirements
5-10.300 Base Course For Minor Streets
5-10.400 Base Course For Major Streets
5-10.500 Design of Structural Sections

Figures

5.10-1 Minimum Asphalt Concrete Depth Requirements
5.10-2 Minimum Depth of Base Course for Local Residential Streets
5.10-3 Minimum Depth of Base Course for Minor Collector, Local Commercial, and Local Industrial Streets
5.10-4 Minimum Depth of Base Course by Street Classification and R-Values
5.10-5 ADOT Material Services R-Value And Soil Support Value Relationships
5.10-6 Flexible Pavements, 20-Year Traffic Analysis
5.10-7 18^k Single-Axle Equivalent Loads By Type Of Vehicle
5.10-8 STRUCTURAL COEFFICIENTS

FLEXIBLE PAVEMENT

ASPHALTIC CONCRETE

5-10.100

DEPTH AND MIX REQUIREMENTS

5-10.101

The asphalt concrete portion of a flexible pavement shall have a minimum depth, number of courses, and mix design called for by street classification in Figure 5.10-1. The mix design references are taken from the East Valley Asphalt Committee Design Standards and from Section 710 of the MAG Specifications and the city of Scottsdale (COS) Supplements to MAG and city of Phoenix Asphaltic Concrete Design Specifications. Mix designs and course thicknesses other than those specified in Figure 5.10-1 may not be used unless approval to do so is provided by the Chief Development Officer or appointed designee. Minimum lift thicknesses are also outlined in Table 710-1 of the COS Supplements to MAG Specifications. The mix design and course thicknesses are to be clearly indicated on paving plans for public rights-of-way improvements.

STREET CLASSIFICATION	MIN. DEPTH	TYPE OF MIX (From MAG TABLE 710-1)		
		Asphalt Base - 1st Lift	Asphalt Base - 2nd Lift	Rubberized Asphalt Surface Course**
Local Residential Minor Collector Local Commercial Local Industrial	3”	2” of R-12.5mm		1” of 12.5 gap graded rubberized asphalt **
Major Collector	5”	2-1/2” of A-19mm	1-1/2” of A-12.5mm	1” of 12.5 gap graded rubberized asphalt **
Minor Arterial Major Arterial	6-1/2”	3” of 25mm	2-1/2” of A-19mm	1” of 12.5 gap graded rubberized asphalt**

***Reference city of Phoenix specifications*

FIGURE 5.10-1. MINIMUM ASPHALT CONCRETE DEPTH REQUIREMENTS

USE OF RECYCLED ASPHALT CONCRETE

5-10.102

Recycled asphalt concrete may not be used in the construction of asphalt concrete pavements.

5-10.200 SOIL TESTING REQUIREMENTS

5-10.201 SUBGRADE SAMPLING LOCATIONS

There should be at least one sample taken at the depth of the planned subgrade for each type of soil found on the project site. There should also be at least one sample for each type of soil used as fill material on which a roadway is to be built. The engineer responsible for the pavement design should take samples in locations that will provide an accurate representation of the subgrade lying beneath the pavement.

5-10.202 TYPES OF TESTS

The following tests are required for design procedures indicated and must be performed in accordance with the American Society for Testing Materials (ASTM) procedures.

1. In order to use the base course design standards and policies for minor streets described under Section 5-10.300, the following tests are required:
   a. Sieve analysis of each sample is needed to determine the percent passing #200 sieve.
   b. Atterberg-Limits tests are needed for each sample. (The liquid limit and plastic limit to establish the plasticity index.)
2. In order to use the base course design procedures for major streets described under Section 5-10.400, or in order to use the structural section design procedures described under Section 5-10.500, R-value testing is required.
   a. R-value determination shall be made for exudation pressure of 3000 psi. Each pavement thickness design must be based on the R-values determined by the tests, and for each length of pavement to be constructed with a constant thickness design, the lowest R-value within that length of pavement will be used. If the engineer elects not to run R-value tests on every subgrade sample, the design report must indicate the basis on which the engineer selected the samples for the R-value tests.
3. Swelling tests are needed if the soil type indicates the presence of soils tending to swell significantly with added moisture.

5-10.203 PAVEMENT DESIGN REPORT

A pavement design report will be required for each development or project in which paving in the public rights-of-way is to be done. This report must be submitted with the paving plans (or be a part of them) and it must describe the soil test results and design choices.

The report must include the following:

1. A map of the project area showing identification and location of each sample taken.
2. A description of the soil conditions.
3. A listing of the test results on each sample.
4. A statement of conclusions applicable to the pavement design.

5-10.300 BASE COURSE FOR MINOR STREETS

5-10.301 BASE COURSE DESIGN CHARTS

There are two design charts for the base courses of minor streets.

1. Figure 5.10-2 is a chart for the design of base courses for Local Residential Streets.

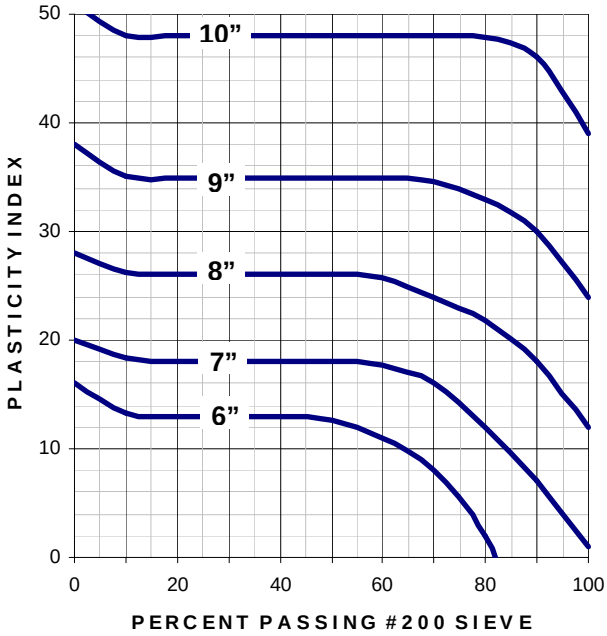

FIGURE 5.10-2. MINIMUM DEPTH OF BASE COURSE FOR RESIDENTIAL STREETS

2. Figure 5.10-3 is a chart for the design of base courses for:
   - Minor Collector Streets.
   - Local Commercial Streets.
   - Local Industrial Streets.

   Note: The top 4 inches of the base course shall be Aggregate Base Course (ABC) and the balance shall be ABC or select material.

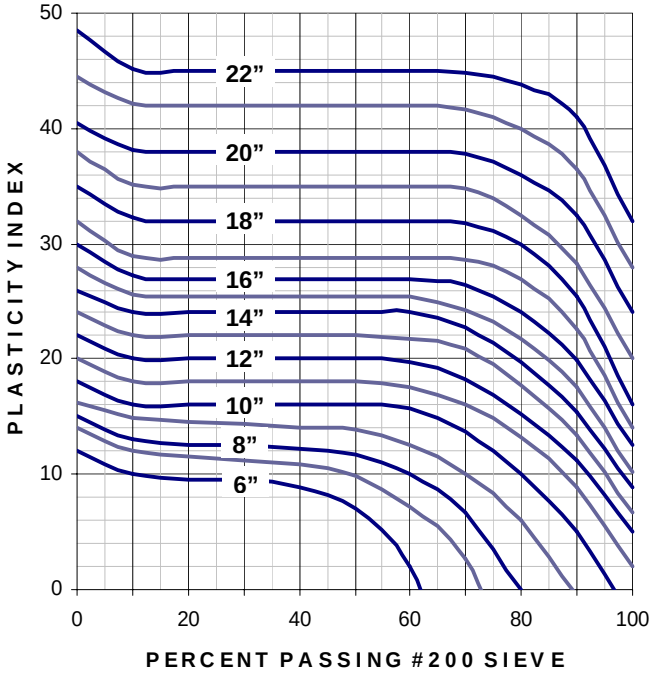

FIGURE 5.10-3. BASE COURSE FOR LOCAL & MINOR COLLECTORS, LOCAL COMMERCIAL, & LOCAL INDUSTRIAL STREETS

5-10.302 BASE COURSE SELECTION PROCEDURE

Determine a minimum base course depth by cross-referencing the plasticity index to the percent of soil passing the #200 sieve (determined by the subgrade soils tests).

> ***Example:***
>
> If building a minor collector street on subgrade soil with a Plasticity Index of 12, and 60% of the soil passes the #200 sieve, the base course depth will be 9 inches (Figure 5.10-3). A local residential street on the same subgrade soil will have a base course of 7 inches (Figure 5.10-2). Referring to Figure 5.10-1, we find that at least 3 inches of R-19 mm asphalt concrete will be placed over either of these two bases.

5-10.303 SUBSTITUTION OF ASPHALT CONCRETE

If the total structural section depth determined with the use of Figures 5.10-1 through 5.10-3 is undesirable, a deeper asphalt concrete section can be used in lieu of some or all of the aggregate base material at a rate of 1 inch of asphalt concrete for 3 inches of aggregate base material. The design for a minor collector street described in the example above could be changed to a 3-1/2-inch-deep asphalt concrete course over a 6-inch-deep base course. This reduces the structural section from 11-1/2 inches to 9-1/2 inches.

5-10.400 BASE COURSE FOR MAJOR STREETS

5-10.401 BASE COURSE DESIGN CHART

The base course depths listed in Figure 5.10-4 below are arranged in accordance with the street classifications and the R-values determined in the subgrade testing. The depths are determined by the procedures used for design of structural sections described in Section 5-10.500. For a given street classification, the street with the heaviest current and projected traffic loading was used to determine the range of base course depths for all streets of that classification; therefore the base course depths listed in this chart will provide conservative pavement designs.

Street Classification	R-Values										
	0 - 5	5 - 10	10 - 15	15 - 20	20 - 25	25 - 30	30 - 35	35 - 40	40 - 45	45 - 50	50+
Major Collector	26	24	22	20	18	16	14	12	11	10	9
Minor Arterial Major Arterials	29	27	25	23	20	18	16	14	12	10	9

FIGURE 5.10-4. MINIMUM DEPTH OF BASE COURSE

5-10.402 BASE COURSE SELECTION PROCEDURE

A base course depth is selected for a major street by finding the depth in inches for the appropriate street classification under the proper R-value range.

> ***Example:***
>
> If a major collector street were built on subgrade soil with an R-value of 38, the base course would be 12 inches deep. According to Figure 5.10-1, at least 5 inches of asphalt concrete must be laid over the base course.

SUBSTITUTION OF ASPHALT CONCRETE 5-10.403

If the total structural section depth determined with the use of Figures 5.10-1 and 5-10-4 is undesirable, a deeper asphalt concrete section can be used in lieu of some or all of the aggregate base material at the rate of 1 inch of asphalt concrete for 3 inches of aggregate base material.

DESIGN OF STRUCTURAL SECTIONS 5-10.500

MODIFIED AASHTO DESIGN PROCEDURES FOR EXPRESSWAYS 5-10.501

The American Association of State Highway and Transportation Officials (AASHTO) published a guide for the design of pavement structures in 1961 and a revised guide in 1972. The Arizona Department of Transportation (ADOT) modified the procedures provided in the AASHTO design guide to meet requirements for the State of Arizona. The city of Phoenix uses the ADOT modified procedures and has selected certain design coefficients appropriate to the Phoenix metropolitan area. The city of Scottsdale also uses the ADOT-modified procedures with the city of Phoenix coefficients.

A. Assumptions

ADOT uses its own adoption of the procedures outlined in the "AASHTO Guide for Design of Pavement Structures" published in 1961 and revised in 1972. The following assumptions must be made:

1. The soil support capacity of the subgrade soils can be predicted adequately by testing to determine R-values.
2. The R-values can be effectively related to a soil-bearing capacity rating scale called the soil support value (SS).
3. A suitable pavement depth is determined by a procedure that considers the soil support value in conjunction with projected traffics loading, environmental conditions, and weighted structural values for the various components of the pavement structure.

DESIGN PARAMETERS 5-10.502

1. Soil Support Value

The soil support value represents the bearing capacity of the subgrade soil. It is determined by a relationship established between its scale and the R-value scale, as shown in Figure 5.10-5. This relationship is not uniform throughout the country. ADOT has established the relationship determined by the following equation.

$$SS = 0.094R + 1.75$$

SS = Soil Support Value
R = R-Value

2. Serviceability Index

Serviceability Index is a number that represents the surface condition of roadway in terms of ride-ability, cracking, patching, and rutting at some point in its design life. It is used in the design equation to represent the theoretical loss of serviceability over the 20-year design period. **The Initial Serviceability Index is 5.0**. The Terminal Serviceability Index varies, depending upon the level of service desired. **Scottsdale uses a Terminal Serviceability Index of 2.5.**

R-Value	Soil Support Value	R-Value	Soil Support Value	R-Value	Soil Support Value
0	1.750	30	4.570	60	7.390
1	1.844	31	4.664	61	7.484
2	1.938	32	4.758	62	7.578
3	2.032	33	4.852	63	7.672
4	2.126	34	4.946	64	7.766
5	2.220	35	5.040	65	7.880
6	2.314	36	5.134	66	7.954
7	2.408	37	5.226	67	8.048
8	2.502	38	5.322	68	8.142
9	2.596	39	5.416	69	8.236
10	2.690	40	5.510	70	8.330
11	2.784	41	5.604	71	8.424
12	2.878	42	5.698	72	8.518
13	2.972	43	5.792	73	8.612
14	3.066	44	5.886	74	8.706
15	3.160	45	5.980	75	8.800
16	3.254	46	6.074	76	8.894
17	3.348	47	6.168	77	8.958
18	3.442	48	6.262	78	9.082
19	3.536	49	6.358	79	9.176
20	3.630	50	6.450	80	9.270
21	3.724	51	6.544	81	9.364
22	3.818	52	6.638	82	9.458
23	3.912	53	6.732	83	9.552
24	4.006	54	6.826	84	9.646
25	4.100	55	6.920	85	9.740
26	4.194	56	7.014	86	9.834
27	4.288	57	7.108	87	9.928
28	4.382	58	7.202	88+	10.000
29	4.476	59	7.296		

FIGURE 5.10-5. ADOT MATERIAL SERVICES R-VALUE & SOIL SUPPORT VALUE RELATIONSHIPS

3. The Structural Number

The Structural Number is derived from an analysis of traffic, subgrade soil conditions, and environmental conditions, that is used in conjunction with structural layer coefficients (related to the type of material to be used in each layer) to calculate the thickness of a flexible pavement structure consisting of various flexible layers. The following is the equation for the structural number developed from data accumulated by AASHTO:

$$SN = -1\ [\{(10504)(Wt^{0.10684})(R^{0.10684})\}/\{(10^{0.039714(SS-3)})(10^{0.10684(Gt/B)})\}]$$

SN = Structural Number
Wt = Total 18,000 pound, single-axle loads
R = Regional Factor=1.0
SS = Soil Support Value

$$B = 0.40 + [(0.081*19^{3.23})/(SN+1)^{5.19}]$$

$$Gt = Log\ [(P_o-P_t)/(P_o-1.5)]$$

P_o = Initial Serviceability Index = 5.0
P_t = Terminal Serviceability Index = 2.5

Since "SN" appears on both sides of the equation, the solution can be most rapidly done by nomograph. Figure 5.10-6 is a nomograph developed by ADOT for this purpose, with a **Terminal Serviceability Index of 2.5** and a **Regional Factor of 1.0**.

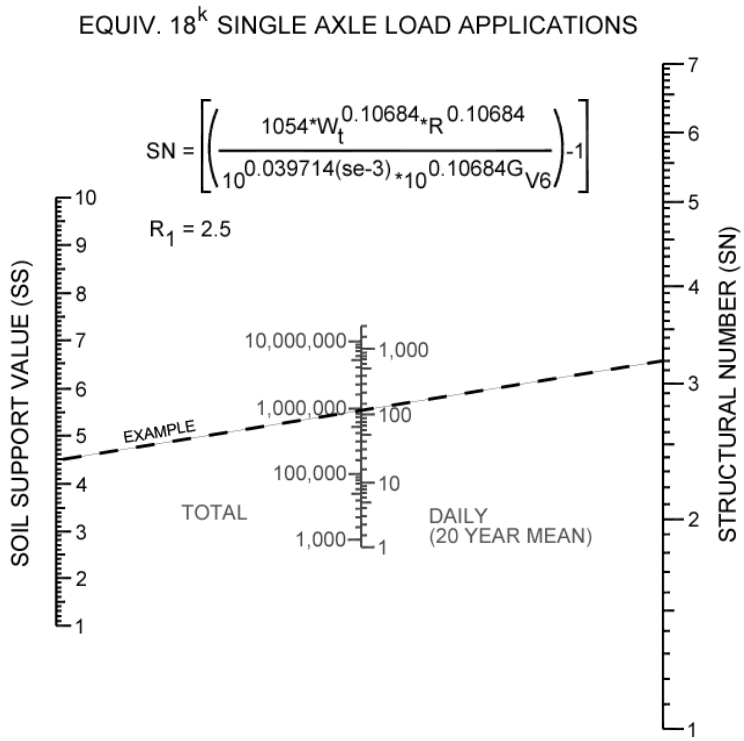

FIGURE 5.10-6. FLEXIBLE PAVEMENTS, 20-YEAR TRAFFIC ANALYSIS

Example:

Soil Support Value = 4.5
Equivalent 18^k single axle load app. daily (20 year mean) = 140

SN = 3.2

5-10.503 PROJECTED TRAFFIC LOADING

The Projected Traffic Loading is an equivalent daily application of 18,000-pound (18K) single-axle loads. All vehicle use data during a 20-year period of time must be converted to equivalent 18K single-axle load applications to be used with Figure 5.10-6. The load applications can be expressed either as a daily 20-year mean or as the total of the load applications applied over a 20-year mean, times 365, times 20. The data required consists of the following:

- Current Average Daily Trips (ADT) (traffic flowing in both directions)
- The 20th year ADT (traffic flowing in both directions)
- Percentage of each type of vehicle classification.

The steps described below will provide the vehicle load information used in Figure 5.10-6.

1. Average ADT in One Direction

Determine the average of the current ADT and the terminal year ADT, then divide by 2 to arrive at an average ADT in one direction. Express this quantity in terms of thousands of vehicles.

Example:

Current ADT = 19,500 vehicles
Terminal ADT = 33,000 vehicles

[(19.5+33.0) / 2] (0.5) = 13.125

2. Equivalent Single Axle Loads

Calculate the 18K equivalent single-axle load applications using the vehicle distribution percentages determined by a traffic survey and the 18K single-axle load for each type of vehicle listed in Figure 5.10-7.

Notation	Type of Vehicle	18k Single-Axle Equiv. Per 1000 Vehicles
C	Passenger cars	0.8
B	Busses	250.0
2P	Light 4-tire trucks	1.2
2S	Heavy 4-tire trucks	5.8
2D	2-axle, 6-tire trucks	163.2
3D	3-axle trucks	598.7
2S1	2-axle tractor, 1-axle semi-trailer	408.2
2S2	2-axle tractor, 2-axle semi-trailer	956.5
3S2	3-axle tractor, 2-axle semi-trailer	514.3
2-2	2-axle truck, 2-axle semi-trailer	304.3
3-2	3-axle truck, 2-axle full trailer	936.8
3-3	3-axle truck, 3-axle full trailer	936.8
2S1-2	2-axle tractor, 1-axle semi-trailer, 2-axle full trailer	846.7
3S1-2	3-axle tractor, 1-axle semi-trailer, 2-axle full trailer	958.0

FIGURE 5.10-7. 18K SINGLE-AXLE EQUIVALENT LOADS BY TYPE OF VEHICLE

Example:

If commercial vehicles make up 23.9% of all vehicles using the roadway, heavy four-tire trucks (Type 2S) make up 18.3% of all commercial vehicles, and the Type 2S 18K single-axle equivalent per 1,000 vehicles is 5.8, as indicated in Figure 5.10-7, then the load application for this type of vehicle per 1,000 vehicles is:

(0.239)(0.183)(5.8) = 0.254

3. 20-Year Mean

The sum of all such loads is the equivalent 18K single-axle load per 1,000 vehicles traveling the road. This sum must be multiplied by the average ADT for traffic in one direction calculated above in Step 1. The result of this multiplication is the number of daily, 20-year mean, equivalent 18K single-axle loads produced by traffic moving in one direction.

4. Lane Load

For streets with more than one lane in each direction, multiply the load calculated in Step 3 above by the following appropriate factor to calculate the design lane load:

a. If the street is to have two lanes in each direction, multiply the number of equivalent 18K single-axle loads by 0.90 to arrive at a design lane equivalent 18K single-axle loading.
b. If the street is to have three lanes in each direction, multiply the number of equivalent 18 K single-axle loads by 0.70 to arrive at a design lane equivalent 18K single-axle loading.

The calculations described above provide the number of daily equivalent 18K single-axle (20-year mean) loads to be used in Figure 5.10-6.

REGIONAL FACTOR 5-10.504

The Regional Factor is used to adjust the Structural Number for climatic and environmental conditions different from those of the AASHTO road test site. The Regional Factor is 1.0. The nomograph shown on Figure 5.10-6 is an abbreviated form of the nomograph prepared by ADOT; no adjustment of the Structural Number for regional conditions is needed.

STRUCTURAL COEFFICIENTS 5-10.505

The components of the pavement structure are assigned structural coefficients to be used with the structural number in developing the design of pavement section. The coefficients shown below were developed by the city of Phoenix from experience, tests, and correlation with information in ADOT design manuals and MAG Specifications.

Local Pavement Component	ADOT Range	Local Coefficient
Asphaltic Concrete (plant mix)	0.34 to 0.46	0.39
Bituminous Treated Base	0.30 to 0.35	0.31
Cement Treated Base*	0.15 to 0.29	0.23
Aggregate Base	0.08 to 0.14	0.12
Select Material	0.05 to 0.12	0.11

* *The Cement Treated Base coefficient is for plant mix. If a road mix is used, the percentage of cement to be used must be increased by 0.5%.*

FIGURE 5.10-8. STRUCTURAL COEFFICIENTS

5-10.506 THE DESIGN PROCEDURE

1. Determine the Structural Number (SN) for the pavement to be designed, using the following is the method:
   a. Determine the R-values by testing and select an R-value for the design, using the formula found in Section 5-10.502(1).
   b. Calculate the equivalent 18K single-axle load application for the length of the street for which the pavement design is required, using the calculation described in Section 5-10.503.
   c. Using the Soil Support Value obtained in Step 1-a above, plot that value on the Soil Support Value Scale in Figure 5.10-6.
   d. Using the equivalent 18K single-axle, 20-year load total or the daily, 20-year mean traffic loading data obtained in Step 1-b above, plot the traffic load on the appropriate scale on Figure 5.10-6.
   e. Draw a straight line from the point plotted on the Soil Support Value Scale of Figure 5.10-6 through the point plotted on the equivalent 18K single-axle load scale until it intersects the Structural Number Scale. Use the Structural Number that can be read at its intersection for the pavement design.
2. Use the Structural Number to calculate the thickness of the structural components with the following equation.

$$C1D1 + C2D2 + C3D3...CNDN = SN$$

C1,C2,C3 = Structural Coefficient (from section 3-10.505)
D1,D2,D3…=Thickness of Component

Example:

From Section 5-10.505, we find that the structural coefficients are 0.39 for the asphaltic concrete, 0.12 for the ABC and 0.11 for the select material. The calculation of the thickness of the select material (SM) is accomplished in the following manner:

$$C1D1 + C2D2 + C3D3 = SN$$

$$(0.39)(5)+(0.12)(4)+(0.11)(SM) = 3.2$$

Solving for SM and rounding off to the nearest inch:

$$SM = 7.0 \text{ inches}$$