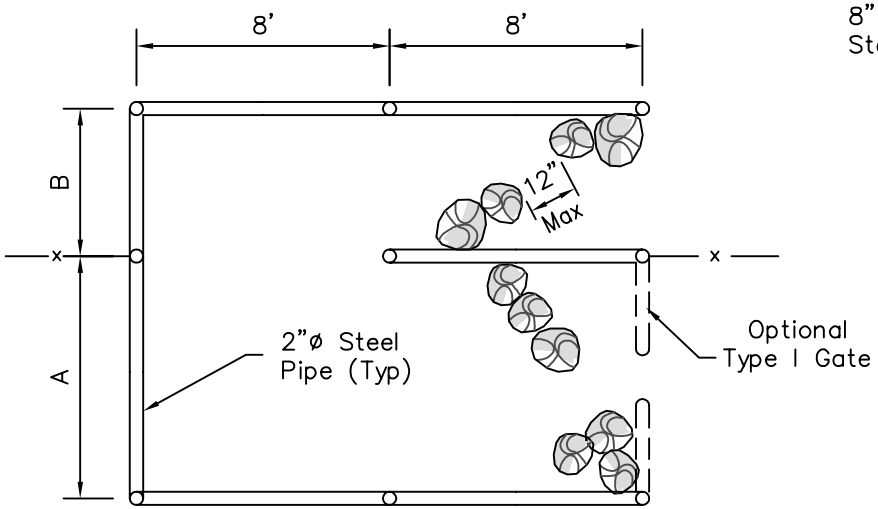

TYPE II GATE

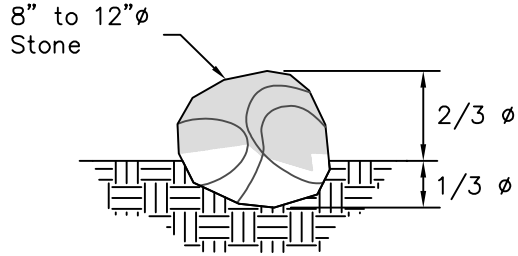

BURIED STONE DETAIL

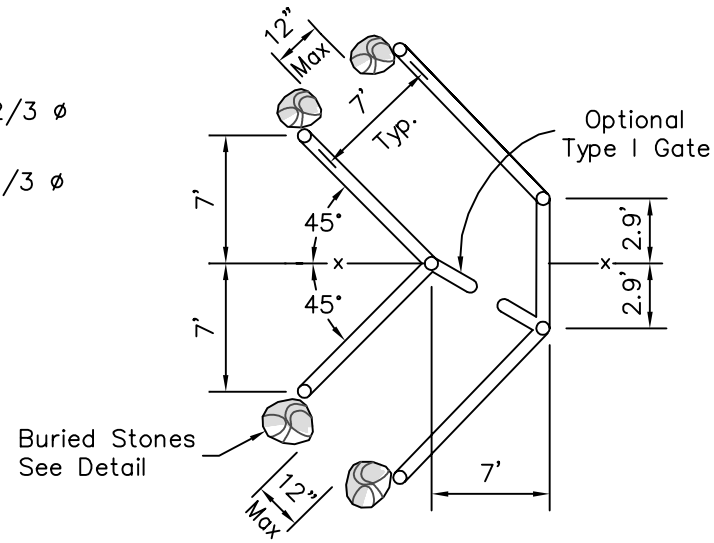

TYPE IV GATE

NOTE:

Gate barriers for Type II, III and IV gates shall be buried stones or Type I gate as shown on plan.

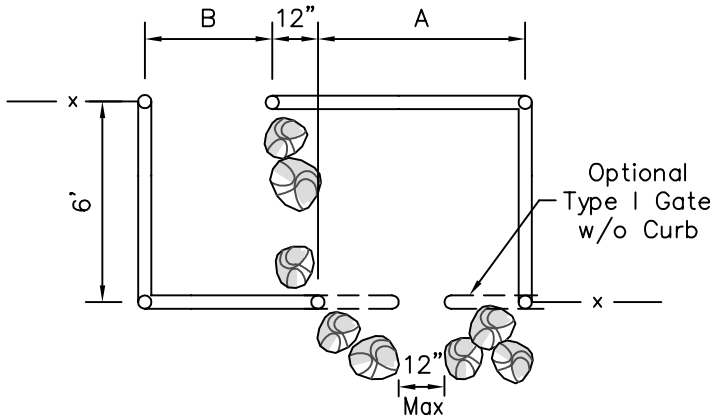

TYPE III GATE

TYPE II and III GATE DIMENSIONS		
GATE BARRIER	A	B
Type I	7'	4'
Buried Rocks	4'	4'

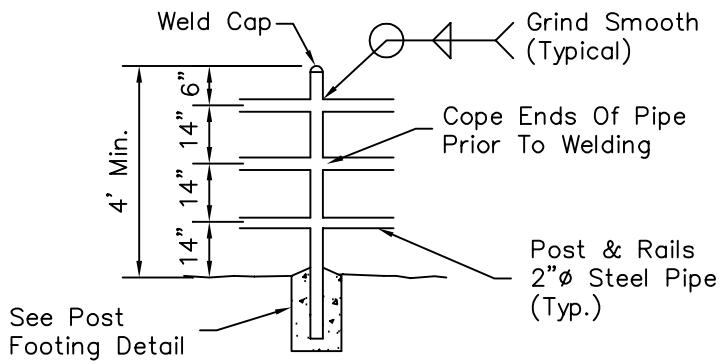

TYPICAL RAIL ELEVATION TYPE II, III & IV GATE

DETAIL NO.	City of Scottsdale Standard Details	APPROVED BY:	TRAIL ACCESS GATES	DETAIL NO.
2680-2				2680-2