MINIMUM TREE SIZE REQUIREMENTS

Name	Size	Height	Width	Caliper
ACACIA				
BLUE LEAF WATTLE	15	6	2	0.75
(ACACIA SALIGNA)	24	8	4	1.5
	30	10	5	2
	36	12	6	2.5
BERLANDER\ GUAJILLO	15	4	2	0.5
(M) (ACACIA BERLANDIERI)	24	5	4	1
	30	7	5	1.5
	36	9	6	2
MULGA	15	5	2	0.75
(ACACIA ANEURA)	24	7	4	1.5
	30	9	6	2
	36	10	8	2.5
SHOESTRING	15	7	2.5	0.75
(ACACIA STENOPHYLLA)	24	9	4	1.5
	30	11	5	2
	36	13	6	2.5
	42	15	7	3
	48	17	8	4
SHOESTRING (M)	15	7	2.5	0.5
(ACACIA STENOPHYLLA)	24	9	4	1
	36	13	6	2
SWEET	15	6	2.5	0.75
(ACACIA SMALLII)	24	8	4	1.5
	30	9	6	2
	36	10	8	2.5
	42	12	10	3
	48	14	12	3.5
SWEET (M)	15	5	3	0.5
(ACACIA SMALLII)	24	8	5	1
	30	9	7	1.5
	36	10	9	2
	42	12	10	2.5
	48	14	12	3

Name	Size	Height	Width	Caliper
ACACIA (Cont.)				
WEEPING	15	5	2	0.75
(ACACIA PENDULA)	24	6.5	3	1.25
	30	9	5	2
	36	11	6	2.5
WILLOW \	15	6	2	0.75
AUSTRALIAN WILLOW	24	8	4	1.5
(ACACIA SALICINA)	30	10	5	2
	36	14	6	2.5
IRONWOOD				
DESERT IRONWOOD	15	3	2	0.5
(OLNEYA TESOTA)	24	6	3	1.25
	30	8	6	2
	36	10	8	2.5
	42	11	9	3
	48	12	10	3.5
DESERT IRONWOOD (M)	15	3	2	0.5
(OLNEYA TESOTA)	24	6	3	1.25
	30	8	6	2
	36	10	8	2.5
	42	11	9	3
	48	12	10	3.5
MESQUITE				
ARGENTINE MESQUITE	15	6.5	2	0.75
(PROSOPIS ALBA)	24	8	4	1.5
	30	9	6	2
	36	11	8	2.5
	42	13	10	3
	48	15	12	3.5

See General Notes
Page 3

Name	Size	Height	Width	Caliper
ARGENTINE MESQUITE	15	5	3	0.75
(M) (PROSOPIS ALBA)	24	8	5	1.25
	30	9	7	1.5
	36	11	9	2
	42	13	11	2.5
	48	15	13	3
MESQUITE (Cont.)				
CHILEAN MESQUITE	15	6	2	0.75
(PROSOPIS CHILENSIS)	24	8	4	1.5
	30	9	6	2
	36	10	8	2.5
	42	12	10	3
	48	14	12	3.5
CHILEAN MESQUITE (M)	15	5	3	0.5
(PROSOPIS CHILENSIS)	24	8	5	1
	30	9	7	1.5
	36	10	9	2
	42	12	11	2.5
	48	14	13	3
HONEY MESQUITE (M)	15	6	2	0.75
(PROSOPIS -	24	8	4	1.5
GLANDULOSA)	30	9	6	2
	36	10	8	2.5
	42	12	10	3
	48	14	12	3.5
SCREW BEAN (M)	15	5.5	3	0.5
(PROSOPIS -	24	8	4	1
PUBESCENS)	30	9	6	1.5
	36	10	8	2
	42	12	10	3
	48	14	12	3.5

Name	Size	Height	Width	Caliper
VELVET\ ARIZONA (M)	15	5.5	3	0.5
(PROSOPIS VELUNTINA)	24	7	4	1
	30	9	6	1.5
	36	10	8	2
	42	12	10	2.5
	48	14	12	3
PALOVERDE				
BLUE PALO VERDE	15	6	2	0.75
(CERCIDIUM FLORIDUM)	24	7.5	4	1.5
	30	9	7	2
	36	10	8	2.5
	42	12	9	3
	48	14	10	3.5
BLUE PALO VERDE (M)	15	5	3	0.5
(CERCIDIUM FLORIDUM)	24	7	4	1
	30	8	6	1.5
	36	10	8	2
	42	12	9	2.5
	48	14	11	3
LITTLE LEAF\ FOOTHILLS	15	4	2	0.5
(CERCIDIUM -	24	6	3	1
MICROPHYLLUM)	30	7	5	1.5
	36	8	6	2
LITTLE LEAF\ FOOTHILLS	15	4	3	0.5
(M) (CERCIDIUM -	24	5	4	1
MICROPHYLLUM M)	30	6	5	1.5
	36	8	7	2

Name	Size	Height	Width	Caliper
SONORAN	15	6	2	0.75
(CERCIDIUM PRAECOX)	24	7	4	1.5
	30	8	6	2
	36	10	8	2.5
	42	11	10	3
	48	12	12	3.5
SONORAN (M)	15	5	2	0.5
(CERCIDIUM PRAECOX)	24	7	4	1
	30	8	6	1.5
	36	10	8	2
	42	11	10	2.5
	48	12	12	3
OTHER TREES				
AFRICAN SUMAC	15	7	2	0.75
(RHUS LANCEA)	24	9	4	1.25
	30	11	6	2
	36	12	8	2.5
	42	14	8	3.5
	48	15	9	4
AFRICAN SUMAC (M)	15	5	3	0.75
(RHUS LANCEA)	24	8	4.5	1
	30	9	7	1.5
	36	11	8	2
	42	13	9	2.5
	48	16	10	3
ALEPPO	15	6	3	0.75
(PINUS HALEPENSIS)	24	9	4	2
	30	11	6	3
	36	14	7	3.5
	42	16	9	4
	48	18	10	4.5

Page 1 of 3

DETAIL NO.	City of Scottsdale	APPROVED BY:	MINIMUM TREE SIZE REQUIREMENTS	DETAIL NO.
2600-1	Standard Details	_____		2600-1

MINIMUM TREE SIZE REQUIREMENTS

Name	Size	Height	Width	Caliper
ARIZONA ASH	15	8	2	1
(FRAXINUS VELUTINA)	24	10	4	1.5
	30	12	5	2
	36	14	8	2.5
	42	15	9	3
	48	16	10	3.5
ARIZONA SYCAMORE	15	7	2	1
(PLATANUS WRIGHTII)	24	9	4	1.5
	30	13	6	2.5
	36	16	8	3.5
ARIZONA SYCAMORE(M)	15	6	3	0.5
(PLATANUS WRIGHTII)	24	8	4	1
	30	12	7	2
	36	15	9	3
AUSTRALIAN WILLOW\	15	5	3	0.75
WILGA	24	8	4	1.25
(GEIJERA PARVIFLORA)	30	10	5	2
	36	12	5.5	2.5
BOTTLE TREE	15	6	2	1.5
(BRACHYCHITON -	24	9	4	2.5
POPULNEUS)	30	12	5	4
	36	15	6	5
	42	17	8	6
	48	20	9	6.5
BRAZILIAN PEPPER	15	8	2	0.75
(SCHINUS -	24	9	4	1.25
TEREBINTHIFOLLA)	30	10	5	2.5
	36	12	8	3
CALIFORNIA PEPPER	15	7	2	0.75
(SCHINUS MOLLE)	24	8	4	1.25
	30	10	6	2.5
	36	12	8	3

Name	Size	Height	Width	Caliper
Canary Island Pine	15	6	2	0.75
(Pinus Canariensis)	24	9	4	2
	30	13	5	3.5
	36	17	5	4
	42	18	6	4.5
	48	22	7	5.5
CAROB	15	8	2	0.75
(CERATONIA SILQUA)	24	9	4	1.5
	30	10	5	2
	36	12	5	3
CHASTE TREE	15	5	3	0.75
(VITEX ANGUS-CASTUS)	24	6	4	1.25
	30	7	5	2
	36	8	6	2.5
CHINESE EVERGREEN	15	7	2	0.75
ELM	24	8	3	1.25
(ULMUS PARVIFOLIA)	30	12	6	2
	36	14	8	2.5
	42	16	9	3.5
	48	18	10	3.75
CHINESE PISTACHE	15	7	2	0.75
(PISTACIA CHINENSIS)	24	9	4	1.5
	30	10	5	2.5
	36	12	6	3.5
CHIR PINE\ INDIAN	15	5	3	1
LONG LEAF	24	8	4	2
(PINUS ROXBURGHII)	30	11	6	2.5
	36	15	6.5	3.5
	42	17	8	4.5
	48	20	9	5

See General Notes
Page 3

Name	Size	Height	Width	Caliper
COOLIBAH	15	7	3	0.75
(EUCALYPTUS -	24	10	4	1.5
MICROTHECA)	30	12	5	2
	36	15	6	2.5
CORK OAK	15	4	2	0.75
(QUERCUS SUBER)	24	6.5	3	1.5
	30	9	4.5	2.5
	36	12	6	3.5
	42	14	9	4
	48	16	11	4.5
CORRAL GUM	15	6	2.5	0.75
(EUCALYPTUS TORQUATA)	24	8	3.5	1.25
DESERT WILLOW	15	6	2	0.75
(CHILOPSIS LINEARIS)	24	7	4	1.25
	30	9	6	1.75
	36	10	8	2.25
DESERT WILLOW (M)	15	5	3	0.75
(CHILOPSIS LINEARIS)	24	7	5	1
	30	9	6	1.5
	36	10	8	2
ELDARICA	15	6	2	1.5
(PINUS ELDARICA)	24	10	4	2
	30	13	4	3
	36	15	5	4
	42	18	7	4.5
	48	20	9	5.5
EVERGREEN PEAR	15	7	2	0.75
(PYRUS KAWAKAMI)	24	9	4	1.5
	30	10	6	2.5
	36	12	8	3.5
	42	14	10	4
	48	16	12	4.5

Name	Size	Height	Width	Caliper
FEATHER BUSH	15	5	3	0.75
FERN OF THE DESERT	24	6.5	4	1.25
(LYSILOMA THORNBERI)	30	7	6.5	2
	36	8	6	2.5
FEATHER BUSH\ FERN	15	4	3	0.75
OF THE DESERT(M)	24	5	5	1
(LYSILOMA THORNBERI)	30	7	7	1.5
	36	8	8	2
FICUS	15	8	2	0.75
(FICUS NITIDA)	24	9	4	1.5
	30	10	5	2
	36	12	6	3
FICUS	15	5.5	3	0.5
(FICUS NITIDA M)	24	8	4	1
	30	10	6	2
	36	12	8	2.5
FLOODED GUM	15	8	3	1
(EUCALYPTUS RUDIS)	24	10	4	1.5
FLOWERING CHERRY	15	6	2.5	0.75
(PRUNUS VARIETIES)	24	9	4	1.25
	30	11	8	2
	36	13	10	2.5
	42	15	11	3
	48	17	12	3.5
HONEY LOCUST	15	8	2	0.75
(GLEDITSIA TRIACANTHOS	24	9	4	1.5
INERMIS)	30	10	6	2
	36	12	8	2.5
	42	14	10	3
	48	16	12	3.5

Name	Size	Height	Width	Caliper
JACARANDA	15	8	2	0.75
(JACARANDA ACUTIFOLIA)	24	9	4	1.5
	30	12	5	2.5
	36	14	8	3
	42	16	8	3.5
	48	18	9	4
JACARANDA (M)	15	5.5	3	0.5
(JACARANDA-	24	8	5	0.75
ACUTIFOLIA)	30	10	6	1.5
	36	12	7	2
LEMON BOTTLE BRUSH	15	8	2	0.75
(CALLISTEMON CITRINUS)	24	9	4	1.25
	30	10	5	2
	36	12	6	2.75
MEDITERANEAN FAN	15	2	2	N\A
PALM	24	3	3	N\A
(CHAMAEROPS HUMULIS)	30	4	4	N\A
	36	5	5	N\A
MESCAL BEAN\ TEXAS	15	3	1	0.75
MOUNTAIN LAUREL	24	4	2	1
(SOPHORA -	30	5	3	1.75
SECUNDIFLORA)	36	6	4	2
MESCAL BEAN\ TEXAS	15	3	2	0.75
MOUNTAIN LAUREL (M)	24	4	3	1
(SOPHORA -	30	5	4	1.5
SECUNDIFLORA)	36	6	5	2
MEXICAN PALO VERDE	15	7	3	1
JERUSALEM	24	9	6	1.5
(PARKINSONIA ACULEATA)	30	11	9	2.5
	36	12	10	3

DETAIL NO.	City of Scottsdale	APPROVED BY:	MINIMUM TREE SIZE REQUIREMENTS	DETAIL NO.
2600-2	Standard Details	_____		2600-2

MINIMUM TREE SIZE REQUIREMENTS

Name	Size	Height	Width	Caliper
MODESTO ASH	15	8	2	1
(FRAXINUS V MODESTO)	24	10	4	1.5
	30	12	6	2
	36	14	7	2.5
	42	16	8	3
	48	17	10	3.5
NARROW LEAF GIMLET	15	6	2.5	0.75
SWAMP MALLET	24	8	3	1
(EUCALYPTUS -				
SPATHULATA)				
OLEANDER	15	7	2	0.75
(NERIUM OLEANDER)	24	9	4	1.25
	30	10	5	2
	36	12	6	2.5
OLIVE TREE	15	5	3	0.5
(OLEA EUROPAEA)	24	8	5.5	1.5
	30	11	9	2
	36	12	10	3
	42	14	12	3.5
	48	16	14	4
ORCHID TREE	15	8	2	0.75
(BAUHINIA)	24	9	4	1.25
	30	11	6	2
	36	13	7	2.5
ORNAMENTAL PEAR	15	7	2	1
(PYRUS CALLERYANA)	24	10	3.5	1.5
	30	12	6	2.5
	36	14	8	3
	42	16	10	3.5
	48	18	12	4

Name	Size	Height	Width	Caliper
RAYWOOD ASH	15	8	4	1
CLARET ASH	24	10	3	1.5
(FRAXINUS O RAYWOODII)	30	12	5	2
	36	14	8	2.5
	42	16	10	3
	48	18	12	4
RED CAP GUM	15	6.5	2.4	0.75
(EUCALYPTUS-	24	8	4	1.25
ERYTHROCORYES)				
RED GUM	15	8	3	1
(EUCALYPTUS-	24	10	4	1.75
CAMALDULENSIS)				
RED IRON BARK	15	8	3	0.75
(EUCALYPTUS -	24	10	4	1.5
SIDEROXYLON)				
RIO GRANDE\ FAN	15	7	2	0.75
TEXAS ASH	24	9	4	1.25
(FRAXINUS V FANTEX)	30	12	5	2
	36	14	8	2.5
	42	15	9	3.5
	48	16	10	4
SHAMEL\ EVERGREEN	15	8	2	1
(FRAXINUS UHDEI)	24	10	4	1.5
	30	12	5	2.5
	36	14	8	3
	42	15	9	3.5
SILK OAK	15	8	3	1
(GREVILLEA ROBUSTA)	24	10	4	2
	30	12	6	2.5
	36	14	7	3

Name	Size	Height	Width	Caliper
SILK TREE MIMOSA (M)	15	5	3.5	0.5
(ALBIZIA JULIBRISSIA)	24	6.5	5	0.75
	30	6	6	1
	36	10	8	2.5
SILVER DOLLAR GUM	15	7	3	0.75
(EUCALYPTUS-	24	10	4	1.5
POLYANTHEMOS)				
SISSOO	15	7	3	0.75
(DALBERGIA SISSOO)	24	10	4	1.25
	30	12	7	2.5
	36	15	10	3
SOUTHERN LIVE OAK	15	6	2	0.75
HERITAGE	24	9	4	1.25
(QUERCUS VIRGINIANA)	30	11	6.5	2
	36	13	8	2.75
	42	15	10	3.5
	48	17	12	4.5
TEXAS EBONY	15	5	2	0.75
(PITHECELLOBIUM-	24	6	3	1.5
FLEXICAULE)	30	7	4	2
	36	9	6	2.5
	42	10	6	3
	48	11	7	3.5

Name	Size	Height	Width	Caliper
SILK TREE MIMOSA	15	6	3	0.75
(ALBISIA JULIBRISSIN)	24	8	4	1.5
	30	10	6	2
	36	12	8	3
TEXAS EBONY (M)	15	4	2	0.5
(PITHECELLUBIUM-	24	6	4	1
FLEXICAULE)	30	7	6	1.5
	36	9	8	2
	42	10	10	2.5
	48	11	11	3
WEEPING BOTTLE	15	8	2	0.75
BRUSH	24	10	3.5	1.5
(CALLISTEMON VIMINALIS)	30	12	5	2
	36	14	7	2.5
WEEPING WILLOW	15	8	2	1
(SALIX BABYLONICA)	24	10	4	1.5
	30	12	6	2.5
	36	14	8	4
WHITE IRON BARK	15	6.5	2.5	0.75
(EUCALYPTUS -	24	8	3.5	1.25
LEUCOXYLON)				
YELLOW OLEANDER	15	6	2	0.5
(THEVETIA PERUVIANA)	24	8	4	1.25
YELLOW OLEANDER(M)	15	4	3.5	0.5
(THEVETIA PERUVIANA)	24	6	5	0.75

GENERAL NOTES:

1. All trees shall be guaranteed for one year from the date of acceptance
2. "M" designates a multitrunk tree. A multitrunk tree is a tree with more than one main trunk.
3. Caliper is measured at 12" above the ground for trees with caliper greater than 4". For multitrunk trees, and trees with caliper of less that 4", the caliper is measured 6" above the ground.
4. Size is listed as the box size in inches except for those trees in 15 gallon containers.

DETAIL NO.
2600-3

City of Scottsdale
Standard Details

APPROVED BY:

MINIMUM TREE SIZE REQUIREMENTS

DETAIL NO.
2600-3

REVISED 7/29/96

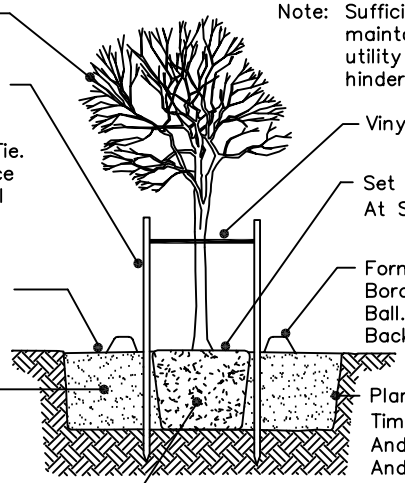

Prune Tree At Time Of Stake Removal.

(2) 2" Diameter x 10' Long Lodgepole Pine Tree Stakes. Bury 3' In Ground And Cut Off Stake 12" Above Vinyl Tie. Stakes Shall Remain In Place For 2 Years Unless Removal Is Approved By Maintenance Director.

Mulch To A Depth Of 1/2", 5' In Diameter. Keep Mulch 6" Away From Trunk.

Backfill With Native Soil. (No Rocks Greater Than 1") Apply Fertilizer To Surface Away From Trunk Per Specifications.

Scarify One Side Of Root Ball Prior To Planting

Note: Sufficient clearance shall be maintained between trees and utility facilities so as to not hinder use of these facilities.

Vinyl Tie, 1" (Min.) In Width

Set Top Of Root Ball At Soil Surface.

Form Temporary Irrigation Border Just Outside Of Root Ball. Use Water To Settle Backfill. Do Not Pack Backfill.

Planting Hole Shall Be 3 Times Diameter Of Root Ball And No Deeper. Scarify Sides And Bottom Of Planting Hole

Tree Planting and Staking
≤36" Box Or 2" Caliper

Note: Sufficient clearance shall be maintained between shrubs and utility facilities so as to not hinder use of these facilities.

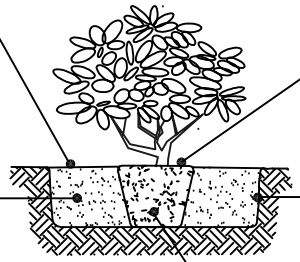

Mulch Soil To A Depth Of 2", 2' In Diameter For 1 Gal. Shrubs, 4' In Diameter For 5 Gal. Shrubs, Keep Mulch 4" Away From Plant Base.

Backfill With Native Soil. Apply Fertilizer To Surface Away From Trunk Per Specifications.

Set Top Of Root Ball At Soil Surface.

Planting Hole Shall Be 3 Times Diameter Of Root Ball And No Deeper. Scarify Sides And Bottom Of Planting Hole

Scarify One Side Of Root Ball Prior To Planting

Shrub Planting

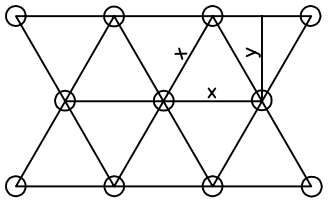

All Groundcovers To Be Planted On Center (See Plant Legend) In A Triangular Pattern.

X = O.C. Dimension As Noted On Plan

Y = 0.86 Of Dimension "X"

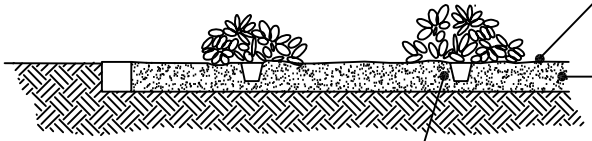

Mulch Soil To A Depth Of 2", 1' In Diameter. Keep Mulch 2" Away From Plant Base.

Prepare Soil Per Specifications And Rototill To A Depth Of 6" Prior To Any Sprinkler Work.

Backfill With Native Soil. Apply Fertilizer To Surface Away From Trunk Per Specifications.

Groundcovers

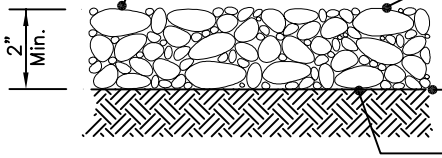

Decomposed Granite Finish Grade To Be Raked Smooth.

Provide Final Application Of Weed Control Upon Final Raking.

Fine Graded Subgrade

Apply Pre-Emergent Herbicide As Per Manufacturers Recommendations. (Surflan Or Equal Approved By City Of Scottsdale)

Decomposed Granite

DETAIL NO.	City of Scottsdale Standard Details	APPROVED	LANDSCAPE DETAILS	DETAIL NO.
2620-1				2620-1

REVISED 1/5/00

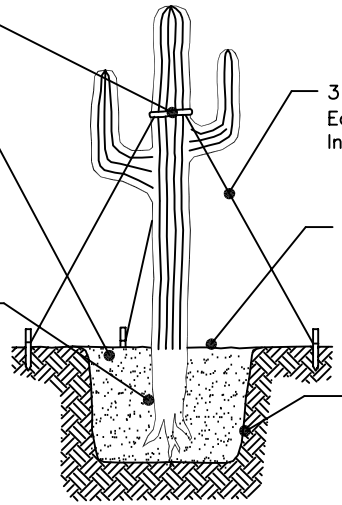

Saguaro Planting Type A

NOTES:

1. Optimum transplanting season is October thru November.
2. Maintain original plant orientation. The original "North" orientation shall be marked on a rib at a height of 5' above ground level.
3. Water thoroughly at the time of transplanting to remove air pockets and assure proper compaction. Backfill shall be free of injurious rocks and debris.
4. Do not water for 3 weeks after planting.
5. Plant in areas safe from present and future construction activities.
6. Transplant to original depth of bury.

NOTE: Water weekly through the summer.

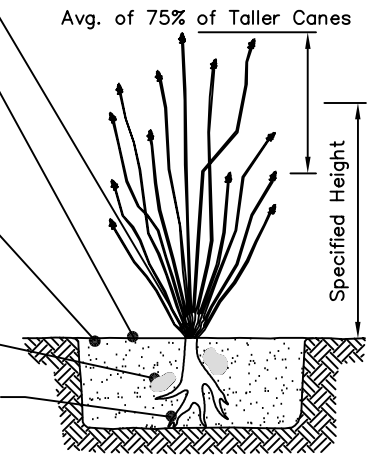

Ocotillo Planting

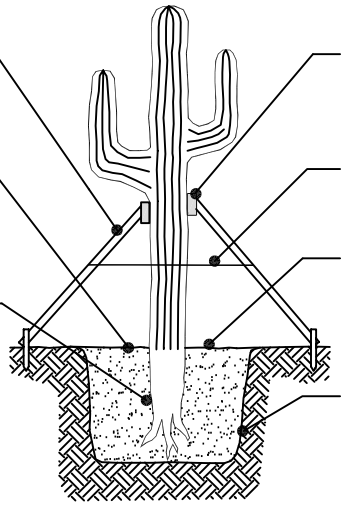

Saguaro Planting Type B

NOTES:

1. Optimum transplanting season is October thru November.
2. Maintain original plant orientation. The original "North" orientation shall be marked on a rib at a height of 5' above ground level.
3. Water thoroughly at the time of transplanting to remove air pockets and assure proper compaction. Backfill shall be free of injurious rocks and debris.
4. Do not water for 3 weeks after planting.
5. Plant in areas safe from present and future construction activities.
6. Transplant to original depth of bury.

NOTES: Water weekly through the summer. Maintain original growing orientation.

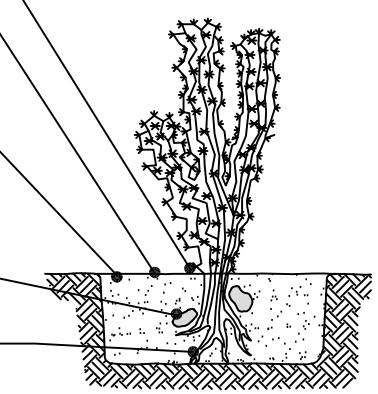

Cactus Planting

DETAIL NO. 2620-2

City of Scottsdale Standard Details

LANDSCAPE DETAILS

DETAIL NO. 2620-2

REVISED 1/5/00

Notes: 1. Sufficient clearance shall be maintained between trees and utility facilities so as to not hinder use of these facilities.

2. Plant pit basins within sloped planting areas shall be constructed with a max. 2:1 slope. Provide smooth transition to surrounding finish grade.

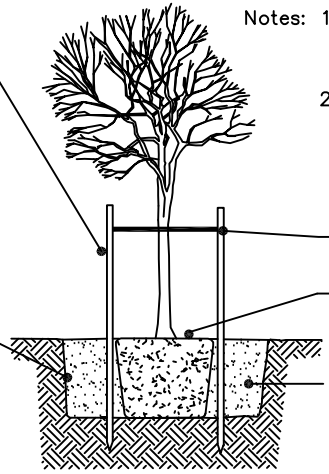

Staking Required For Trees In 36" Box Or Less Or With A Caliper Of Less Than 2". (2) 2" Diameter x 10' Long Lodgepole Pine Tree Stakes. Bury 3' In Ground And Cut Off Stake 12" Above Vinyl Tie. Stakes Shall Remain In Place For 2 Years Unless Removal Is Approved By Maintenance Director.

Vinyl Tie, 1" (Min.) In Width

Set Top Of Root Ball At Soil Surface.

Backfill With Native Soil. (No Rocks Greater Than 3") Backfill 3/4 The depth Of Rootball Before Removing Box Side Panels. Compact Backfill As Needed To Prevent Breaking Rootball.

Planting Hole Shall Be 2 Times Diameter Of Root Ball And No Deeper. Scarify Sides And Bottom Of Planting Hole

Salvaged Tree Planting

(LEFT BLANK)

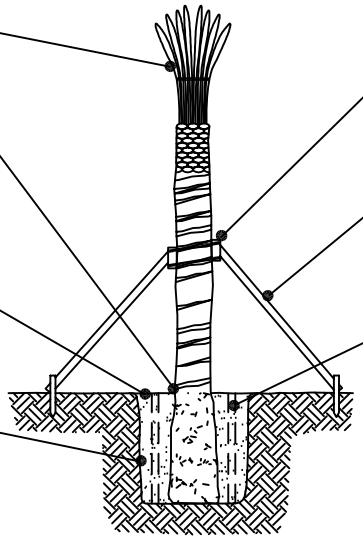

Thin Top 6–8 Fronds, Tie With Natural Fiber Twine. (Remove Ties Prior To Buckling 60–90 Days).

Plant At Depth Which Plant Was Grown. Adjusting Root Ball Depth To Align Finished Height Will Not Be Allowed.

100% Golf Sand Backfill. Settle Backfill With Water, Do Not Pack Backfill.

Planting Hole Width Shall Be 3 Times Diameter Of Roots And No Deeper Than The Extension Of The Roots.

2"x 4" Blocking Nailed To Brace. Tie To Trunk With 1" (Min,) Vinyl Tie.

(3) 2"x 6" Braces, Spaced Equally And Nailed To Wooden Stakes In The Ground.

4" Perforated PVC, 2 Per Tree. Wrap PVC With Soil Screen Fabric.

Palm Planting and Bracing Detail

(LEFT BLANK)

DETAIL NO.	City of Scottsdale Standard Details	LANDSCAPE DETAILS	DETAIL NO.
2620-3			2620-3

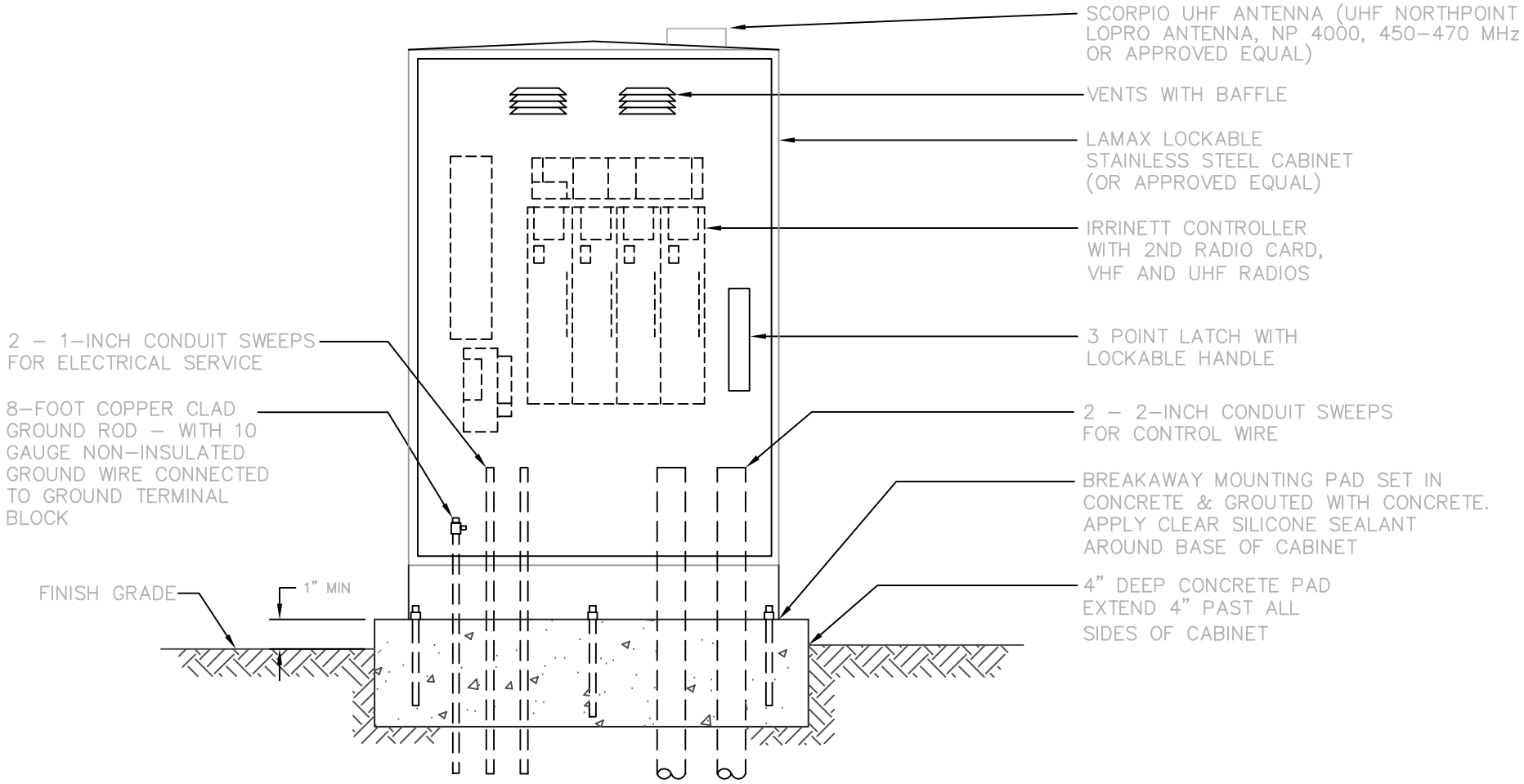

NOTES:

1. POWER SOURCE FOR CONTROLLER TO BE HARD WIRED FROM CIRCUIT BREAKER MOUNTED INSIDE CABINET TO CONTROLLER.
2. LOCATION OF POWER SOURCE TO BE NOTED ON CIRCUIT BREAKER PANEL.
3. PROGRAMMING KEYPAD TO BE SUPPLIED WITH CONTROLLER.
4. CONTROLLER TO BE LOCATED IN AREA WITH POSITIVE DRAINAGE.
5. INSTALL ONLY ONE CONTROL VALVE WIRE PER CONTROLLER OUTPUT.
6. VHF AND UHF RADIOS TO BE TUNED TO C.O.S. FREQUENCIES. CONTACT IRRIGATION DEPARTMENT FOR INFORMATION (480–312–2189)

DETAIL NO.	City of Scottsdale Standard Details	IRRINET PEDESTAL MOUNTED CONTROLLER	DETAIL NO.
2631			2631

REVISED: 4/25/02

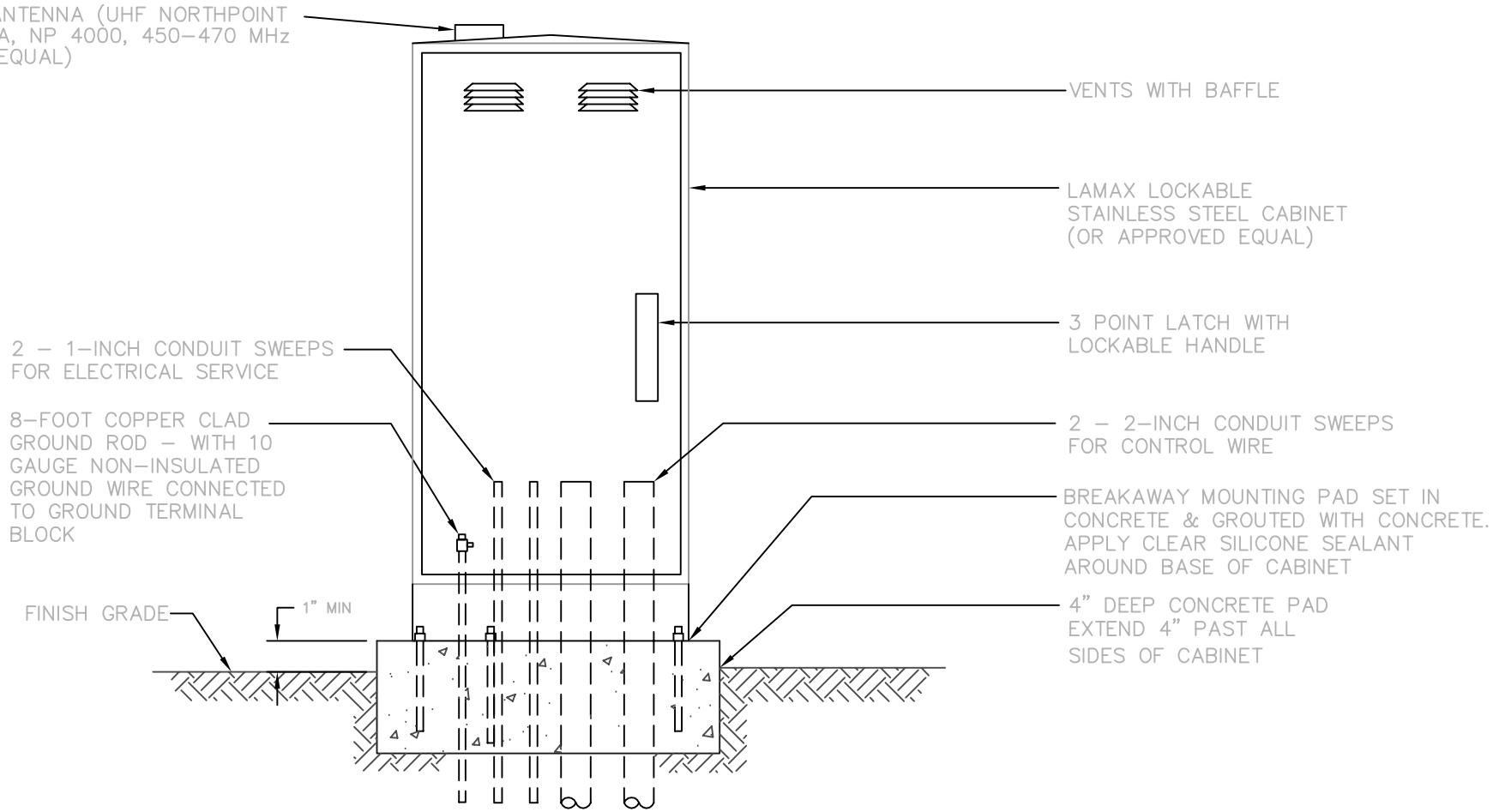

NOTES:

1. POWER SOURCE FOR CONTROLLER TO BE HARD WIRED FROM CIRCUIT BREAKER MOUNTED INSIDE CABINET TO CONTROLLER.
2. LOCATION OF POWER SOURCE TO BE NOTED ON CIRCUIT BREAKER PANEL.
3. REMOTE CONTROL VALVES FOR D.C. SCORPIO APPLICATIONS MUST HAVE D.C. LATCHING SOLENOIDS AND APPROVED SOLAR PANEL FOR POWER SOURCE.
4. JSLM NARROW BAND RADIO # 2845 G TO BE INSTALLED WITH SCORPIO CONTROLLER.
5. PROGRAMMING KEYPAD TO BE SUPPLIED WITH CONTROLLER.
6. CONTROLLER TO BE LOCATED IN AREA WITH POSITIVE DRAINAGE.
7. INSTALL ONLY ONE CONTROL VALVE WIRE PER CONTROLLER OUTPUT.
8. UHF RADIO TO BE TUNED TO C.O.S. FREQUENCIES. CONTACT IRRIGATION DEPARTMENT FOR INFORMATION (480–312–2189)

DETAIL NO. 2632	City of Scottsdale Standard Details	SCORPIO PEDESTAL MOUNTED CONTROLLER	DETAIL NO. 2632

REVISED: 4/25/02

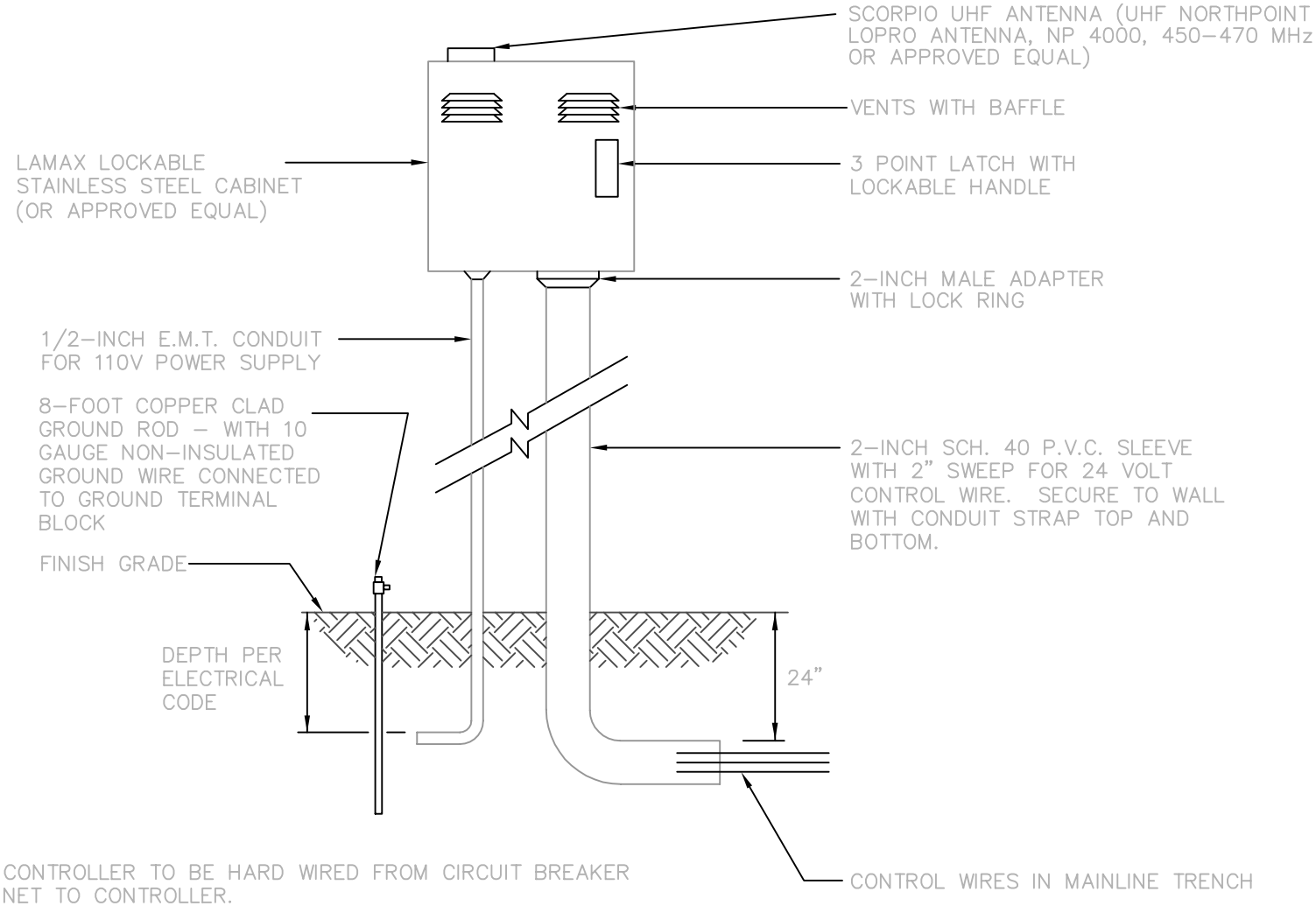

NOTES:

1. POWER SOURCE FOR CONTROLLER TO BE HARD WIRED FROM CIRCUIT BREAKER MOUNTED INSIDE CABINET TO CONTROLLER.
2. LOCATION OF POWER SOURCE TO BE NOTED ON CIRCUIT BREAKER PANEL.
3. REMOTE CONTROL VALVES FOR D.C. SCORPIO APPLICATIONS MUST HAVE D.C. LATCHING SOLENOIDS AND APPROVED SOLAR PANEL FOR POWER SOURCE.
4. JSLM NARROW BAND RADIO #2845 G TO BE INSTALLED WITH SCORPIO CONTROLLER.
5. INSTALL ONLY ONE CONTROL VALVE WIRE PER CONTROLLER OUTPUT.
6. UHF RADIO TO BE TUNED TO C.O.S. FREQUENCIES. CONTACT IRRIGATION DEPARTMENT FOR INFORMATION (480–312–2189)

REVISED: 3/27/02

DETAIL NO. 2633	City of Scottsdale Standard Details	SCORPIO WALL MOUNTED CONTROLLER	DETAIL NO. 2633

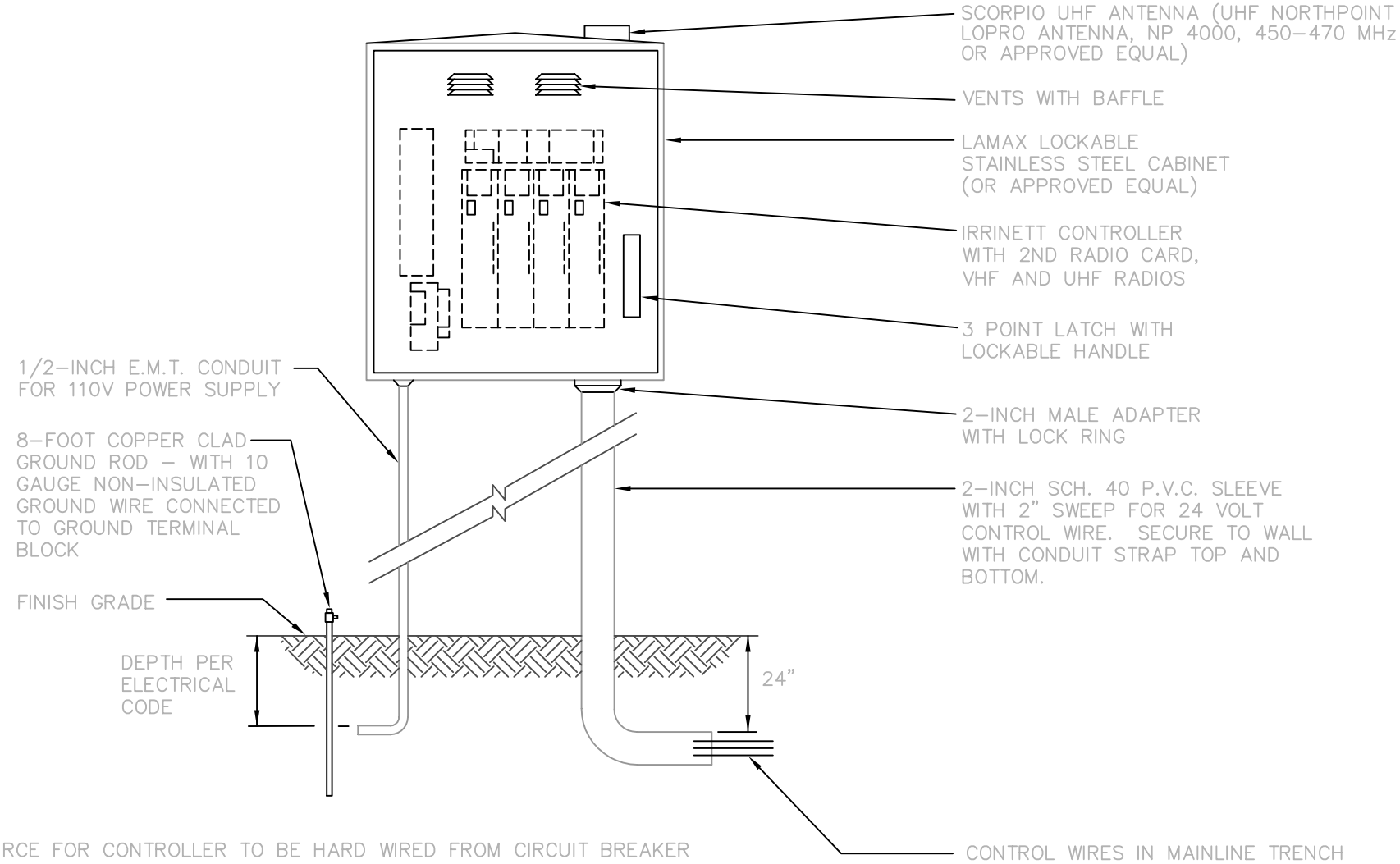

NOTE:
1. POWER SOURCE FOR CONTROLLER TO BE HARD WIRED FROM CIRCUIT BREAKER MOUNTED INSIDE CABINET TO CONTROLLER.
2. LOCATION OF POWER SOURCE TO BE NOTED ON CIRCUIT BREAKER PANEL.
3. PROGRAMMING KEYPAD TO BE SUPPLIED WITH CONTROLLER.
4. INSTALL ONLY ONE CONTROL VALVE WIRE PER CONTROLLER OUTPUT.
5. VHF AND UHF RADIOS TO BE TUNED TO C.O.S. FREQUENCIES. CONTACT IRRIGATION DEPARTMENT FOR INFORMATION (480–312–2189)

REVISED: 4/25/02

DETAIL NO. 2634	City of Scottsdale Standard Details	IRRINET WALL MOUNTED CONTROLLER	DETAIL NO. 2634

NOTES:

1. INSTALL WIRE OF APPROPRIATE GAUGE, CONNECTORS, SEALANT, AND ADAPTORS PER MANUFACTURERS INSTRUCTIONS.
2. D.C. LATCHING SOLENOIDS ON REMOTE CONTROL VALVES TO BE COMPATIBLE WITH CONTROLLER.
3. MASTER VALVE TO BE INSTALLED AND WIRED TO CONTROLLER. RAINBIRD GB VALVE, SAME SIZE AS MAINLINE INSTALLED PER COS DETAIL #2654 (REMOTE CONTROL VALVE) WITH DC LATCHING SOLENOID COMPATIBLE WITH CONTROLLER.
4. PROGRAMMING/ACCESS KEY TO BE SUPPLIED WITH CONTROLLER.
5. INSTALL MANUFACTURERS STAINLESS STEEL ENCLOSURE FOR CONTROLLER.
6. PROVIDE 12" EXANSION COIL FOR EACH WIRE SPLICE INSIDE SPLICE BOX WHEN SPLICES ARE REQUIRED BY MANUFACTURER.

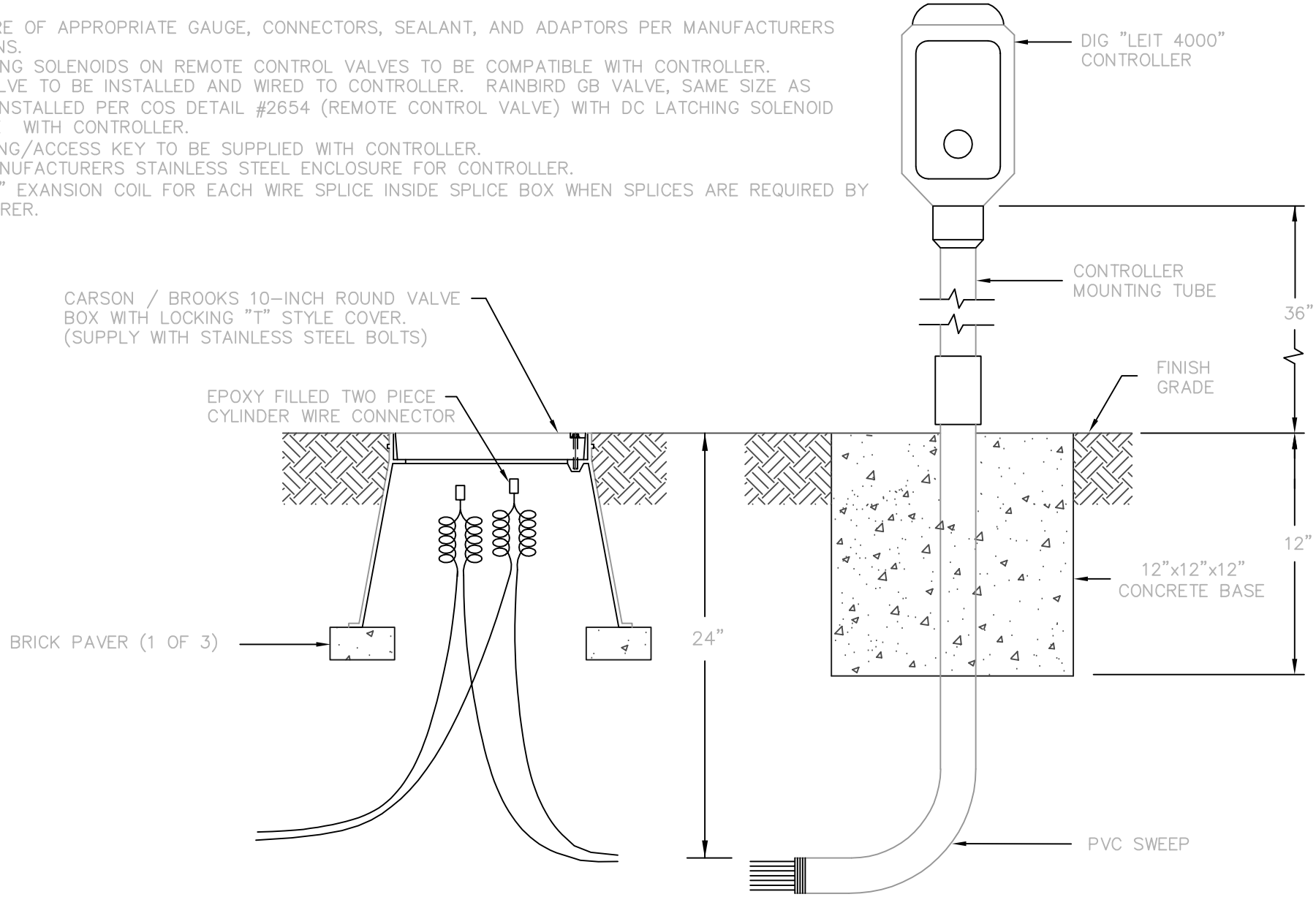

REVISED: 4/26/02

DETAIL NO.	City of Scottsdale Standard Details	SOLAR CONTROLLER	DETAIL NO.
2635-1			2635-1

NOTES:

1. INSTALL WIRING OF APPROPRIATE GAUGE, CONNECTORS, SEALANT, AND ADAPTORS PER MANUFACTURERS INSTRUCTIONS.
2. INSTALL CONTROL WIRES, SPLICES, AND MOUNTING COLUMN AS FURNISHED/SPECIFIED BY THE CONTROLLER MANUFACTURER.
3. LABEL ALL WIRES IN CONTROLLER.
4. D.C. LATCHING SOLENOIDS ON REMOTE CONTROL VALVES TO BE COMPATIBLE WITH CONTROLLER.
5. MASTER VALVE TO BE INSTALLED AND WIRED TO CONTROLLER. RAINBIRD GB VALVE, SAME SIZE AS MAINLINE INSTALLED PER COS DETAIL #2654 (REMOTE CONTROL VALVE) WITH DC LATCHING SOLENOID COMPATIBLE WITH CONTROLLER.
6. REFER TO COS DET 2354 FOR ADDITIONAL BACKFLOW PREVENTION DEVICE DETAILS.
7. PROGRAMMING/ACCESS KEY TO BE PROVIDED WITH CONTROLLER.
8. PROVIDE 12" EXANSION COIL FOR EACH WIRE SPLICE INSIDE SPLICE BOX WHEN SPLICES ARE REQUIRED BY MANUFACTURER.

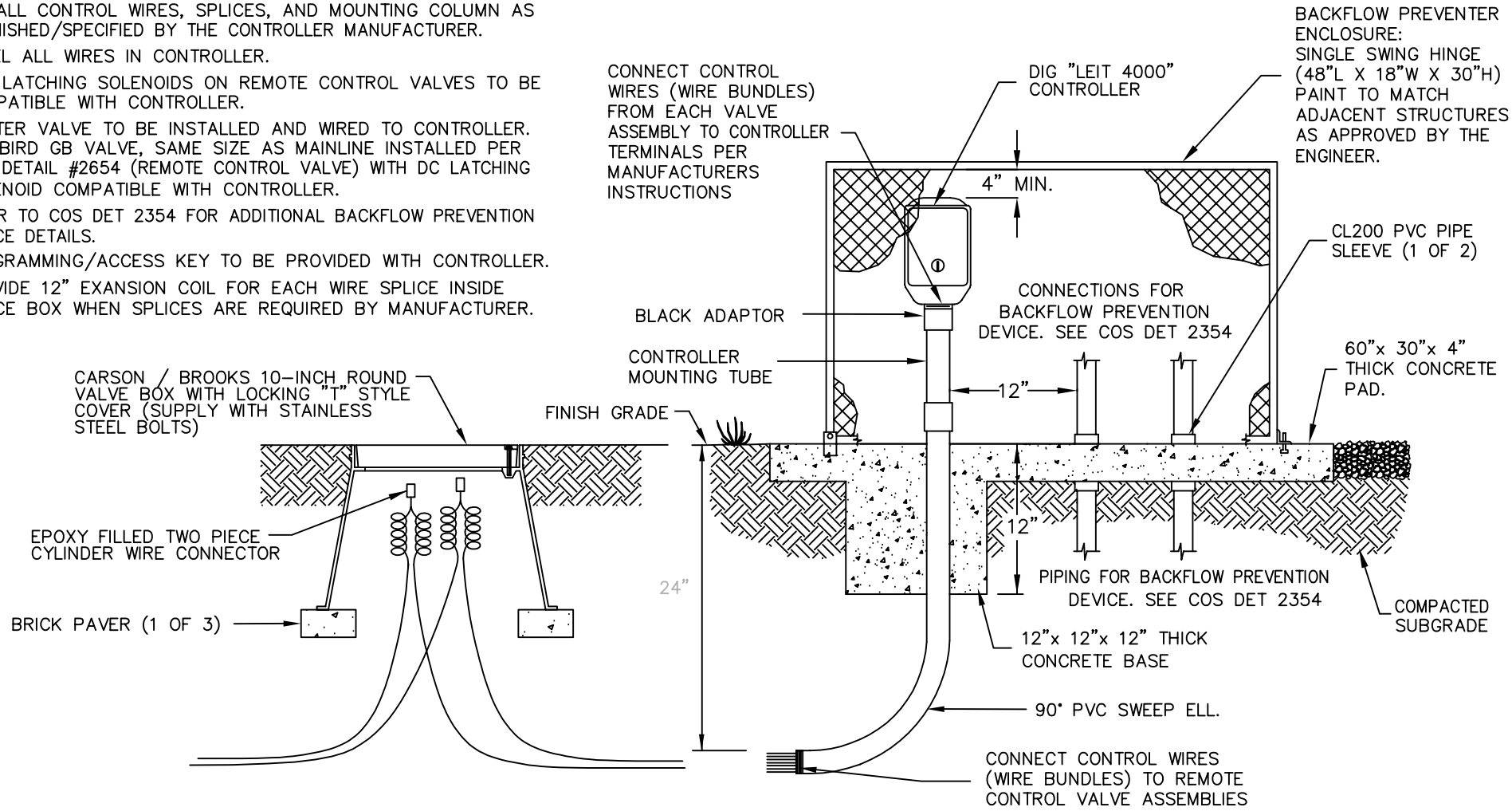

REVISED4/26/02

DETAIL NO.	City of Scottsdale Standard Details	SOLAR CONTROLLER AND BACKFLOW PREVENTER ENCLOSURE	DETAIL NO.
2635-2			2635-2

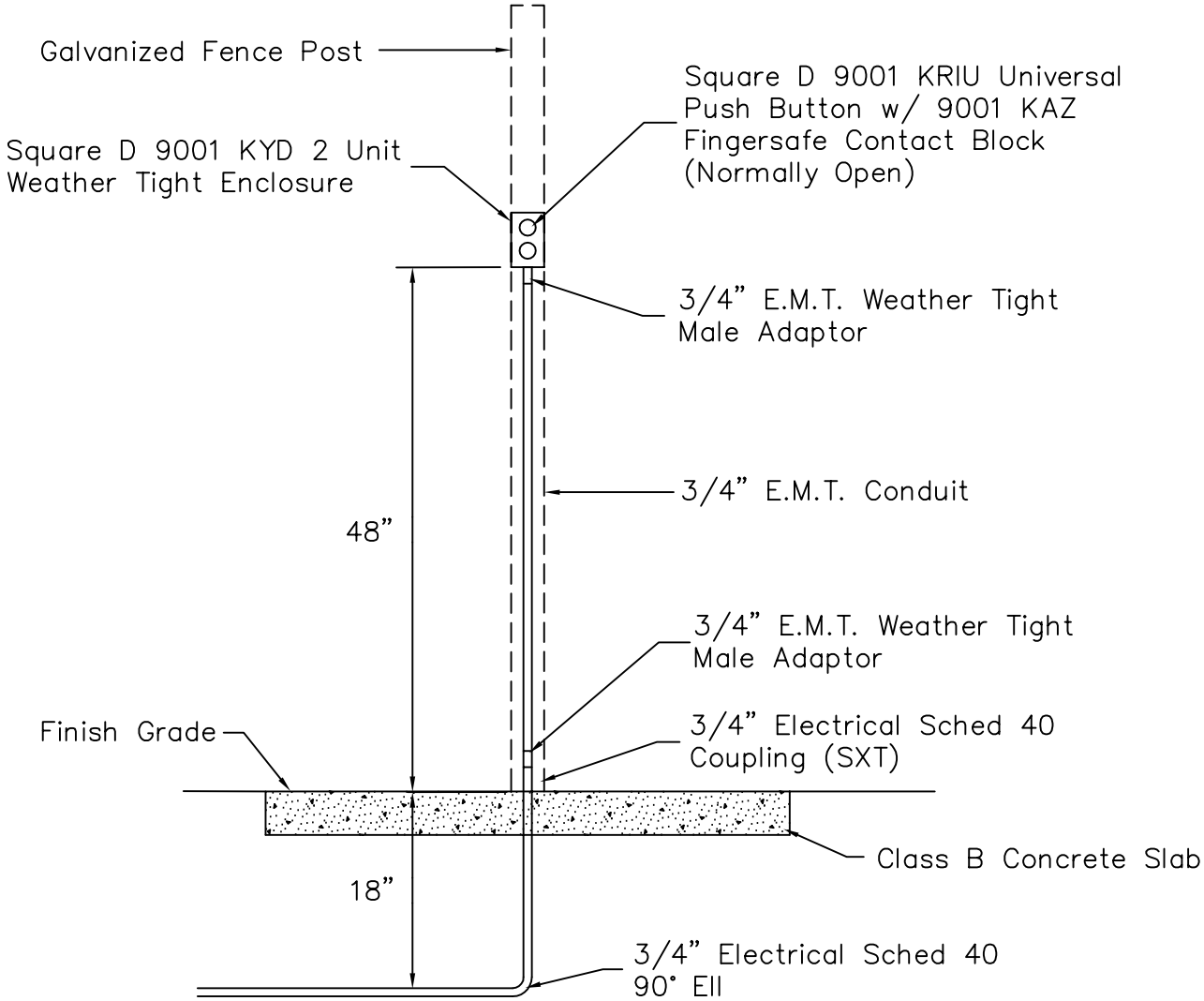

NOTES:

1. Install #14 ga. irrigation control wire.
2. Install one control wire per push button. Control wire to be different color from all other irrigation control wires.
3. Common wire (#12 ga) for push buttons shall be a separate common wire and not part of the irrigation control valve common wire.
4. Push button common wire to have color stripe matching push button control wire. The common wire may be shared by other push buttons.
5. Attach push button enclosure to galvanized post with two self-tapping hex head screws.
6. For other configurations/applications, contact Irrigation Dept 480-312-2189.
7. Label control wires inside enclosure and at controller to differentiate their functionality.

DETAIL NO. 2636	City of Scottsdale Standard Details	IRRIGATION PUSH BUTTON CONTROL	DETAIL NO. 2636

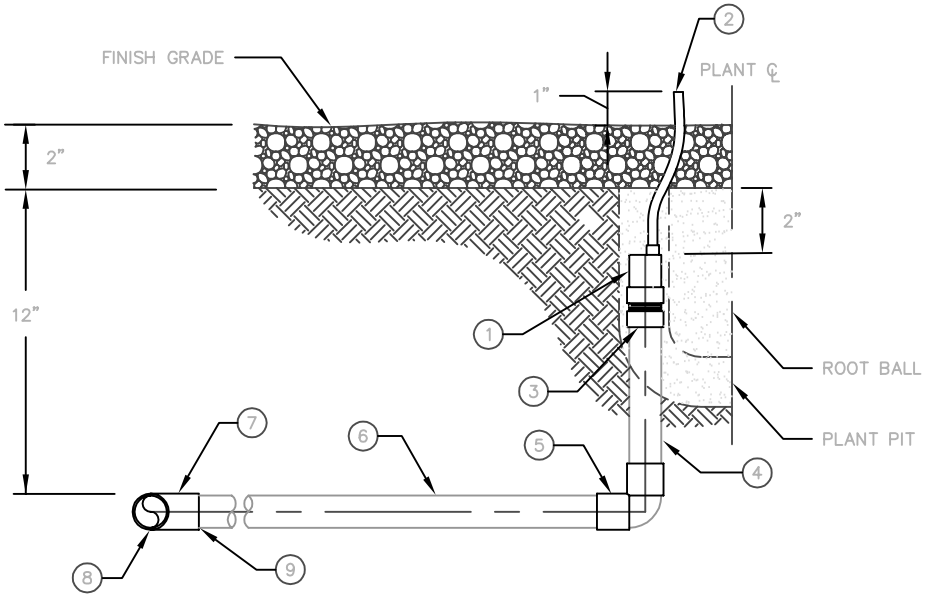

SINGLE OUTLET EMITTER
ALL SHRUBS & GROUND COVER

SCALE: NTS

LIST OF MATERIALS

1. BOWSMITH SL – SERIES SINGLE PORT EMITTER OR APPROVED EQUAL. LOCATE ON UPHILL SIDE OF PLANT CENTERLINE
2. 1/4" POLY FLEX HOSE EMITTER TUBING
3. 1/2" PVC SCH 40 MALE ADAPTOR
4. AG. PRODUCTS – 1/2" I.P.S. FLEXIBLE VINYL PVC PIPE OR APPROVED EQUAL
5. 1/2" PVC SCH 40 90° ELBOW
6. 1/2" PVC CL 315 PIPE
7. 1/2" PVC SCH 40 FITTING
8. PVC CL 315 FOR 1/2" LATERALS, PVC CL 200 FOR LATERALS GREATER THAN 1/2"
9. INSTALL BUSHING AS REQUIRED.

NOTES

1. PIPE CEMENT & PRIMER SHALL BE AS SPECIFIED BY MANUFACTURER FOR FLEXIBLE AND RIGID PIPE CONNECTIONS.
2. EMITTER TUBING EMISSION POINTS SHALL BE EQUALLY SPACED AND LOCATED TO DIRECT WATER FLOW TO THE PERIMETER OF THE DRIP LINE.
3. NUMBER OF OPENINGS AND EMITTER TUBES REQUIRED IS BASED ON PLANT SIZE. (SEE COS STD. DET. 2641–2)
4. MAXIMUM EMITTER TUBING LENGTH = 36".

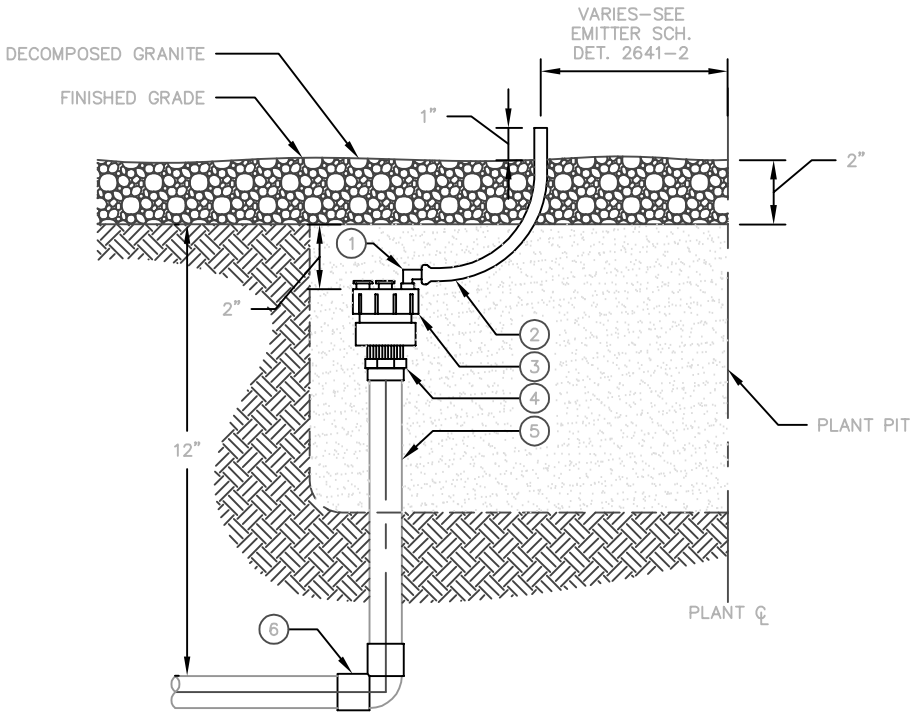

MULTI-OUTLET EMITTER
TREES ONLY

SCALE: NTS

LIST OF MATERIALS

1. SWIVEL OUTLET 90° ELBOW
2. 1/4" POLY FLEX HOSE EMITTER TUBING
3. BOWSMITH ML 200 SERIES MULTI–PORT EMITTER OR APPROVED EQUAL. LOCATE ON UPHILL SIDE OF PLANT ℄
4. 1/2" PVC SCH 40 MALE ADAPTER
5. AG. PRODUCTS 1/2" I.P.S. FLEXIBLE VINYL PVC PIPE OR APPROVED EQUAL
6. 1/2" PVC SCH 40 FITTING

REVISED: 4/25/02

DETAIL NO. 2641-1	City of Scottsdale Standard Details	SINGLE & MULTI-OUTLET EMITTERS	DETAIL NO. 2641-1

REVISED 7/29/96

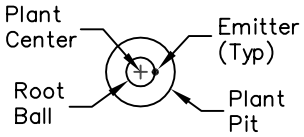

SHRUB EMITTER SINGLE OUTLET

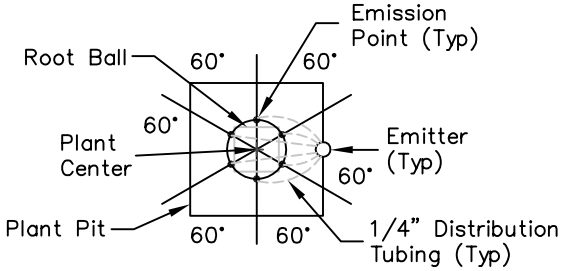

TREE EMITTER - MULTI OUTLET 15 GAL TO 42" BOX TREES

(SEE EMITTER SCHEDULE)

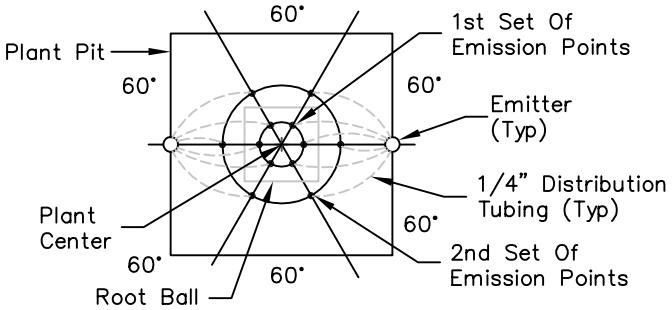

TREE EMITTER - MULTI OUTLET 48" BOX TO 60" BOX TREES

(SEE EMITTER SCHEDULE)

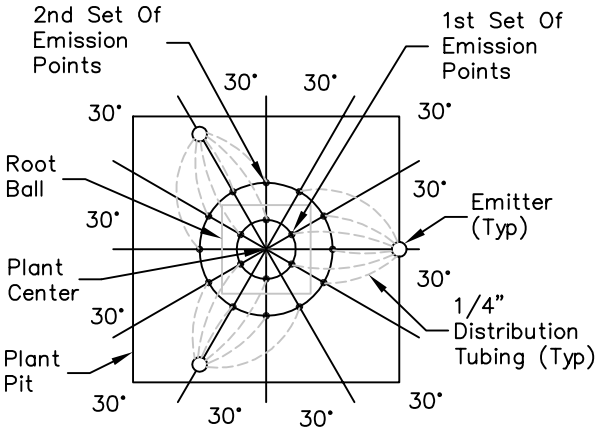

TREE EMITTER - MULTI OUTLET 66" BOX TO 84" BOX TREES

(SEE EMITTER SCHEDULE)

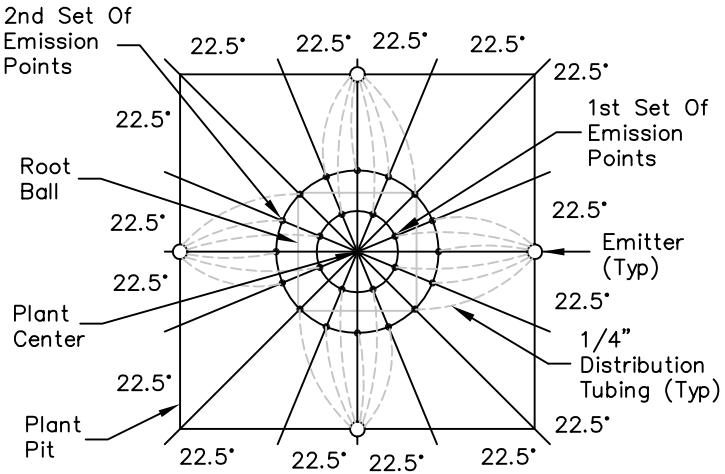

TREE EMITTER - MULTI OUTLET 96" BOX TREES

(SEE EMITTER SCHEDULE)

EMITTER SCHEDULE			
Tree Size	Number Of Multi Outlet Emitters – Outlet Quantity = Emitter GPH Total	Distance From Trunk	
		1st Set Of Emission Points	2nd Set Of Emission Points
15 Gal.	1–1 GPH=6 GPH	3 @ 12"	
24" Box	1–1 GPH=6 GPH	4 @ 18"	
30" Box	1–1 GPH=6 GPH	6 @ 21"	
36" Box	1–2 GPH=12 GPH	6 @ 24"	
42" Box	1–2 GPH=12 GPH	6 @ 27"	
48" Box	2–2 GPH=24 GPH	6 @ 12"	4 @ 42"
54" Box	2–2 GPH=24 GPH	6 @ 15"	5 @ 45"
60" Box	2–2 GPH=24 GPH	6 @ 18"	6 @ 48"
66" Box 72" Box	3–2 GPH=36 GPH	6 @ 24"	12 @ 54"
78" Box 84" Box	3–2 GPH=36 GPH	6 @ 30"	12 @ 60"
≥ 90" Box	4–2 GPH=48 GPH	8 @ 33"	16 @ 66"

DETAIL NO. **2641-2**

City of Scottsdale Standard Details

APPROVED BY: _____

IRRIGATION EMITTER LAYOUT

DETAIL NO. **2641-2**

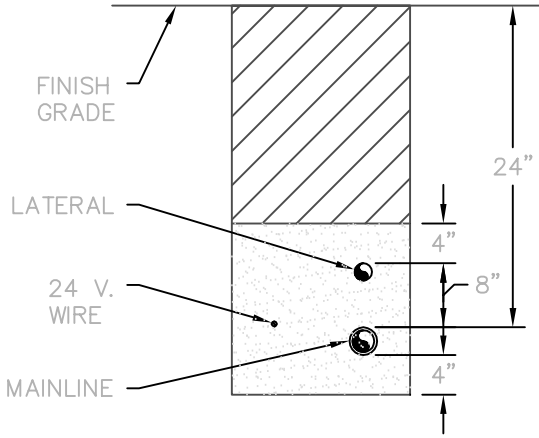

MAINLINE, LATERAL & 24V WIRE

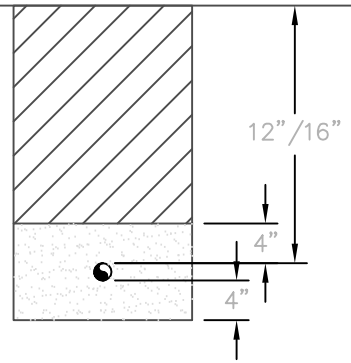

PVC LATERAL

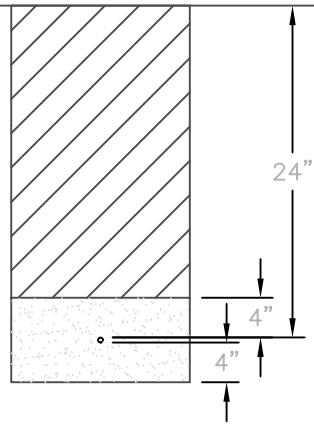

24V WIRE

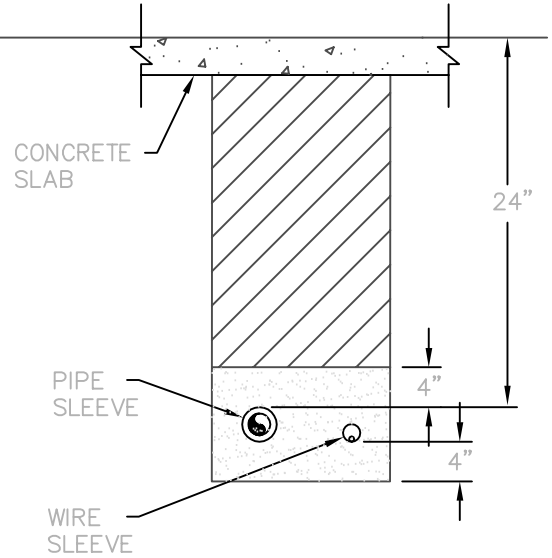

PIPE & WIRE SLEEVING

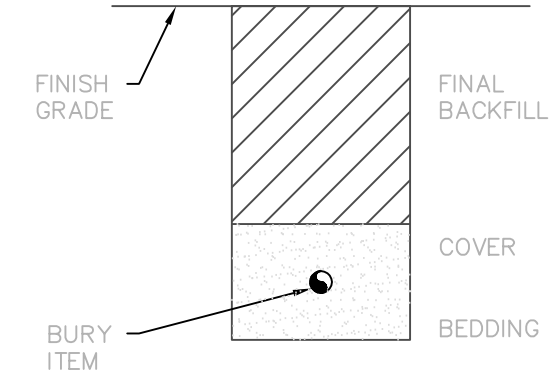

EXCAVATED MATERIAL SHALL BE FINELY SCREENED WITH NO ROCKS LARGER THAN 1".

BEDDING AND COVER MATERIAL SHALL BE TOPSOIL WITH NO ROCKS.

NOTES:

1. BEDDING SHALL BE PLACED AND LEVELED PRIOR TO INSTALLATION OF BURY ITEM.
2. BACKFILL SHALL BE PLACED IN MAXIMUM 6" LIFTS.
3. SLEEVE ALL PIPE AND WIRE SEPARATELY. SLEEVE 2 X DIA. OF PIPE. ONE PIPE PER SLEEVE.
4. ALL PIPE TO BE INSTALLED PER MANUFACTURES SPECIFICATIONS WITH PIPE LABELING FACING UP FOR INSPECTION PURPOSES. PROVIDE A MINIMUM OF 2" CLEARANCE TO SIDE OF TRENCH AND BETWEEN PIPES.
5. ALL 120 V. WIRING SHALL BE INSTALLED IN ACCORDANCE WITH LOCAL CODE REQUIREMENTS.
6. TAPE AND BUNDLE IRRIGATION CONTROL WIRES EVERY 10'. PROVIDE LOOSE 20" LOOP AT ALL CHANGES OF DIRECTION OVER 30°.
7. ALL IRRIGATION CONTROLLER POWER SERVICE WIRING AND ALL VALVE WIRING NOT INSTALLED WITH MAINLINE PIPE SHALL BE INSTALLED IN A MINIMUM 2" DIAMETER SCHEDULE 80 GRAY ELECTRICAL CONDUIT.

DETAIL NO. 2642	City of Scottsdale Standard Details	IRRIGATION TRENCHING	DETAIL NO. 2642

REVISED: 2/27/02

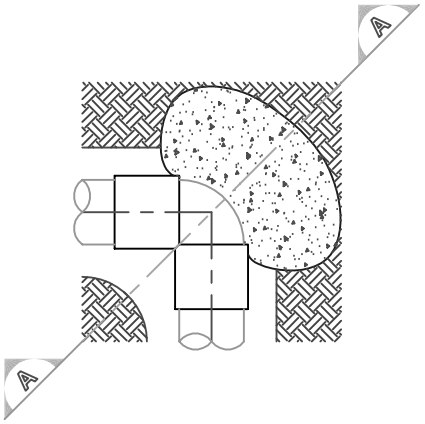

90° ELL

SCALE: NTS

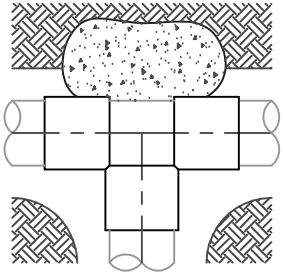

TEE

SCALE: NTS

MINUMUM THRUST BLOCK AREA (YxW)		
PIPE SIZE	IRRIGATION PIPE	
	TEE, DEAD END 90°BEND	45°,22.5°
2" & LESS	1 SF	.5 SF
3"	1.5 SF	1 SF
4"	2 SF	1.5 SF
5" & LARGER	PER MAG DETAIL 380	PER MAG DETAIL 380

NOTES

1. MINIMUM THRUST BLOCK AREAS ARE BASED ON A SOIL BEARING CAPACITY OF 3000 LBS/SF
2. THRUST BLOCK SHALL EXTEND INTO UNDISTURBED SOIL.
3. THRUST BLOCK SHALL BE MAG SECT. 725–CLASS C.

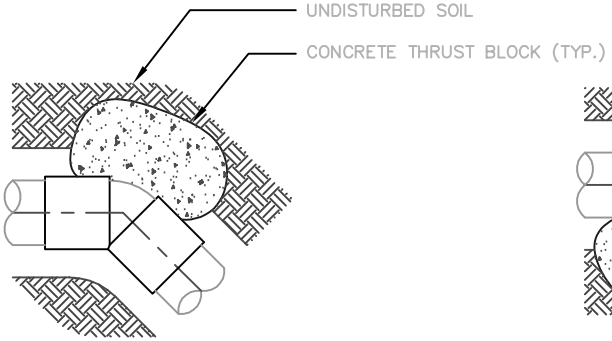

45° ELL

SCALE: NTS

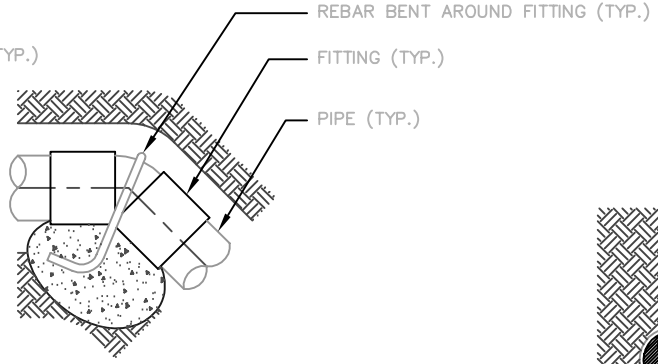

45° ELL (VERTICAL)

SCALE: NTS

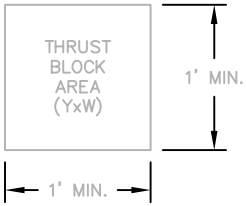

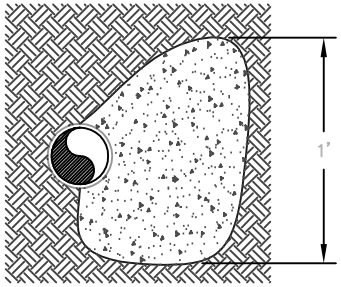

SECTION A

REVISED: 1/11/00

DETAIL NO. 2643	City of Scottsdale Standard Details	IRRIGATION THRUST BLOCK	DETAIL NO. 2643

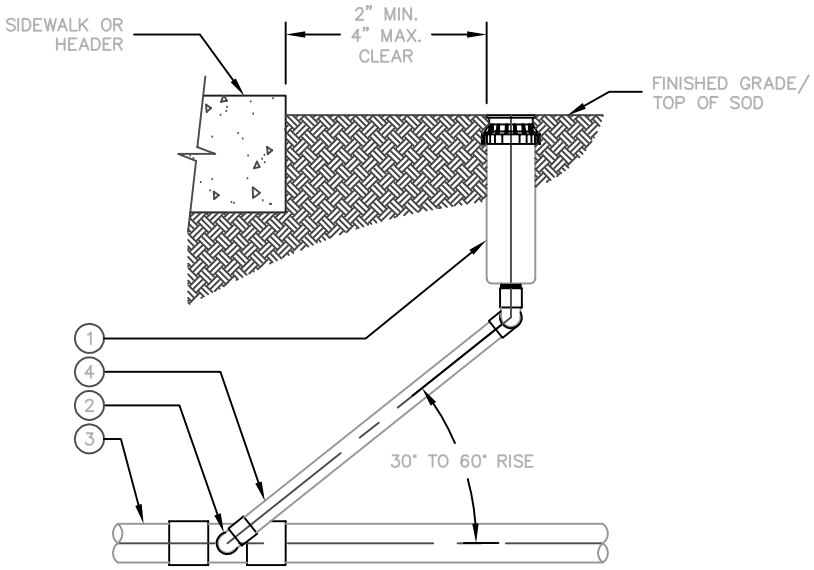

SWING JOINT ASSEMBLY ELEVATION

SCALE: NTS

LIST OF MATERIALS

1. ROTOR SPRINKLER HEAD
2. STREET ELL (1 OF 3) SCH 40 PVC
3. PVC LATERAL PIPE
4. SCH 80 NIPPLE TBE

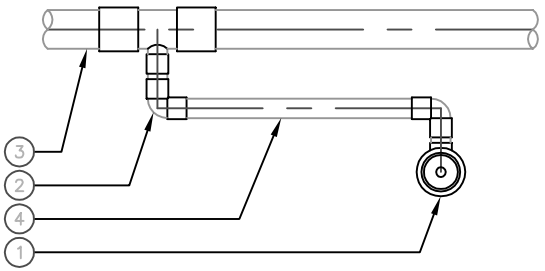

SWING JOINT ASSEMBLY PLAN

SCALE: NTS

NOTES

1. SWING JOINT TO BE THE SAME SIZE AS SPRINKLER HEAD INLET.
2. NO PRE-FAB SWING JOINTS
3. NO MARLEX FITTINGS

REVISED: 2/27/02

DETAIL NO. 2644	City of Scottsdale Standard Details	ROTOR SPRINKLER ASSEMBLY	DETAIL NO. 2644

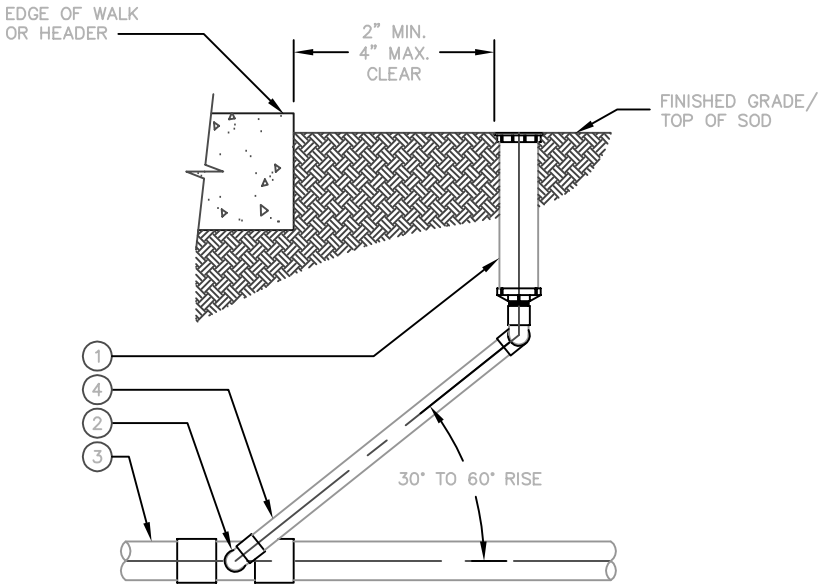

SWING JOINT ASSEMBLY ELEVATION

SCALE: NTS

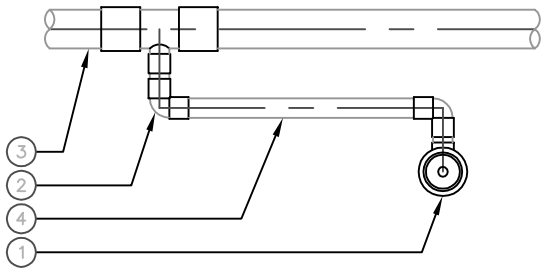

SWING JOINT ASSEMBLY PLAN

SCALE: NTS

LIST OF MATERIALS

1. 4" POP-UP SPRAY SPRINKLER HEAD
2. STREET ELL (1 OF 3) SCH 40 PVC
3. PVC LATERAL PIPE
4. SCH 80 NIPPLE TBE

NOTES

1. SWING JOINT TO BE THE SAME SIZE AS SPRINKLER HEAD INLET.
2. NO PRE-FAB SWING JOINTS
3. NO MARLEX FITTINGS

REVISED: 2/27/02

DETAIL NO. 2645	City of Scottsdale Standard Details	POP-UP SPRINKLER ASSEMBLY	DETAIL NO. 2645

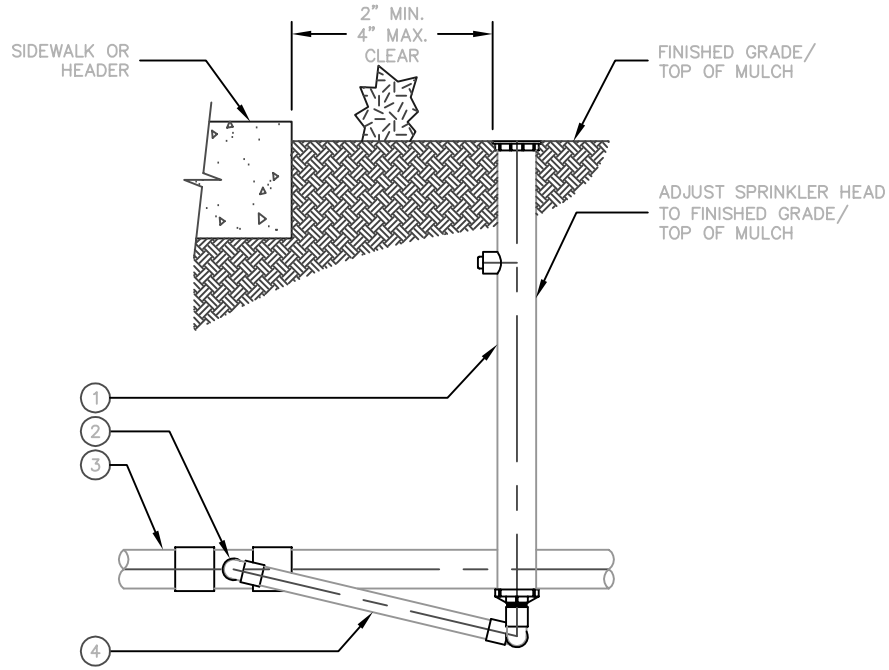

SWING JOINT ASSEMBLY ELEVATION

SCALE: NTS

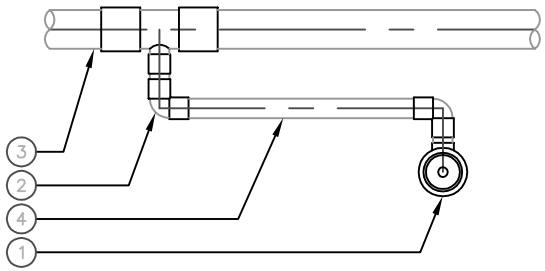

SWING JOINT ASSEMBLY PLAN

SCALE: NTS

LIST OF MATERIALS

1. 12" POP-UP SPRAY SPRINKLER HEAD
2. STREET ELL (1 OF 3) SCH 40 PVC
3. PVC LATERAL PIPE
4. SCH 80 NIPPLE TBE

NOTES

1. SWING JOINT TO BE THE SAME SIZE AS SPRINKLER HEAD INLET.
2. SWING JOINT SHALL BE CONNECTED TO BOTTOM OUTLET.
3. NO PRE-FAB SWING JOINTS
4. NO MARLEX FITTINGS

REVISED: 2/27/02

DETAIL NO. 2646	City of Scottsdale Standard Details	SHRUB POP-UP SPRINKLER ASSEMBLY	DETAIL NO. 2646

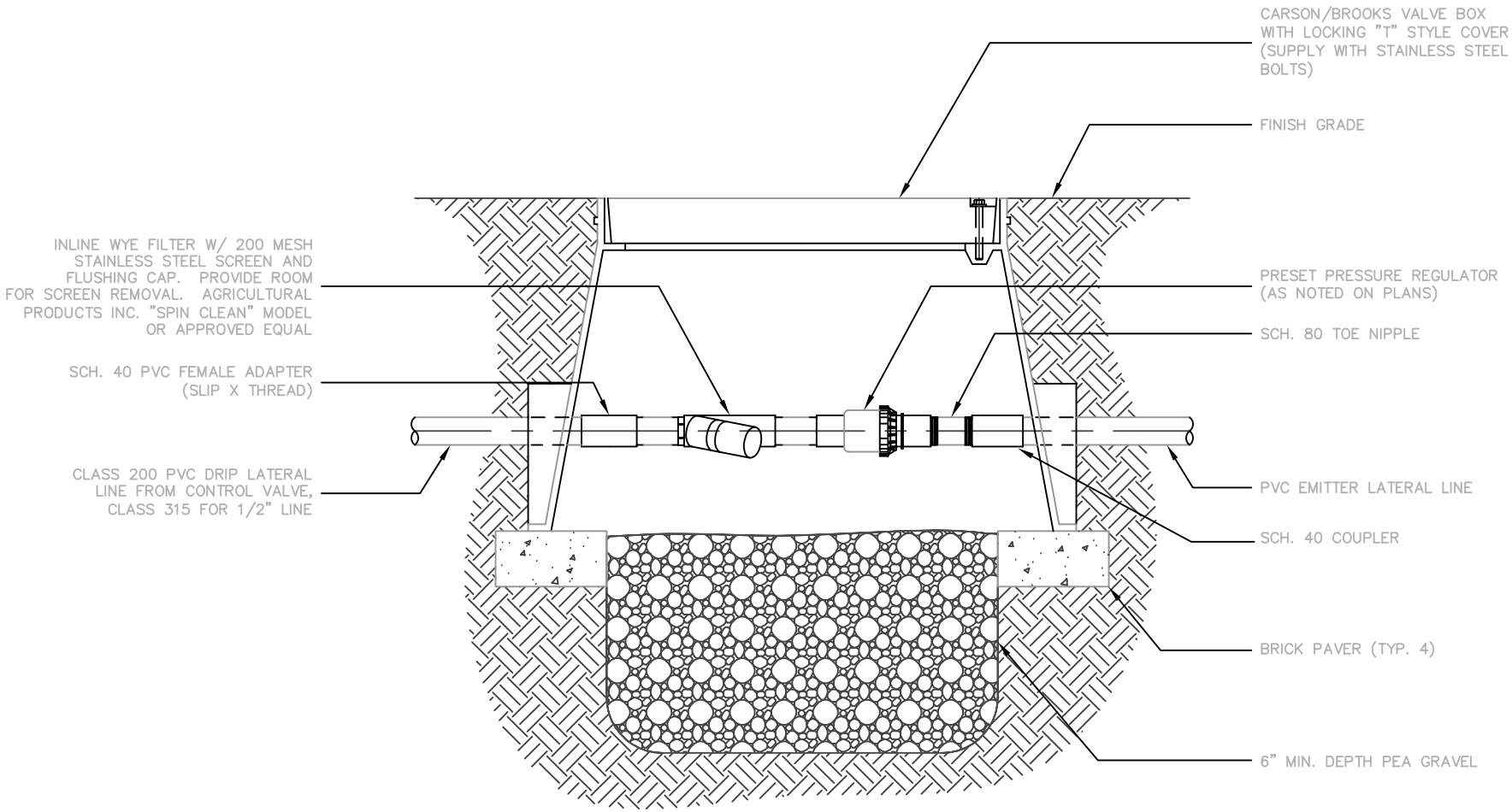

DRIP FILTER & PRESS. REG. ASSEMBLY

SCALE: NTS

REVISED: 3/27/02

DETAIL NO. 2647	City of Scottsdale Standard Details	DRIP FILTER & PRESSURE REGULATOR	DETAIL NO. 2647

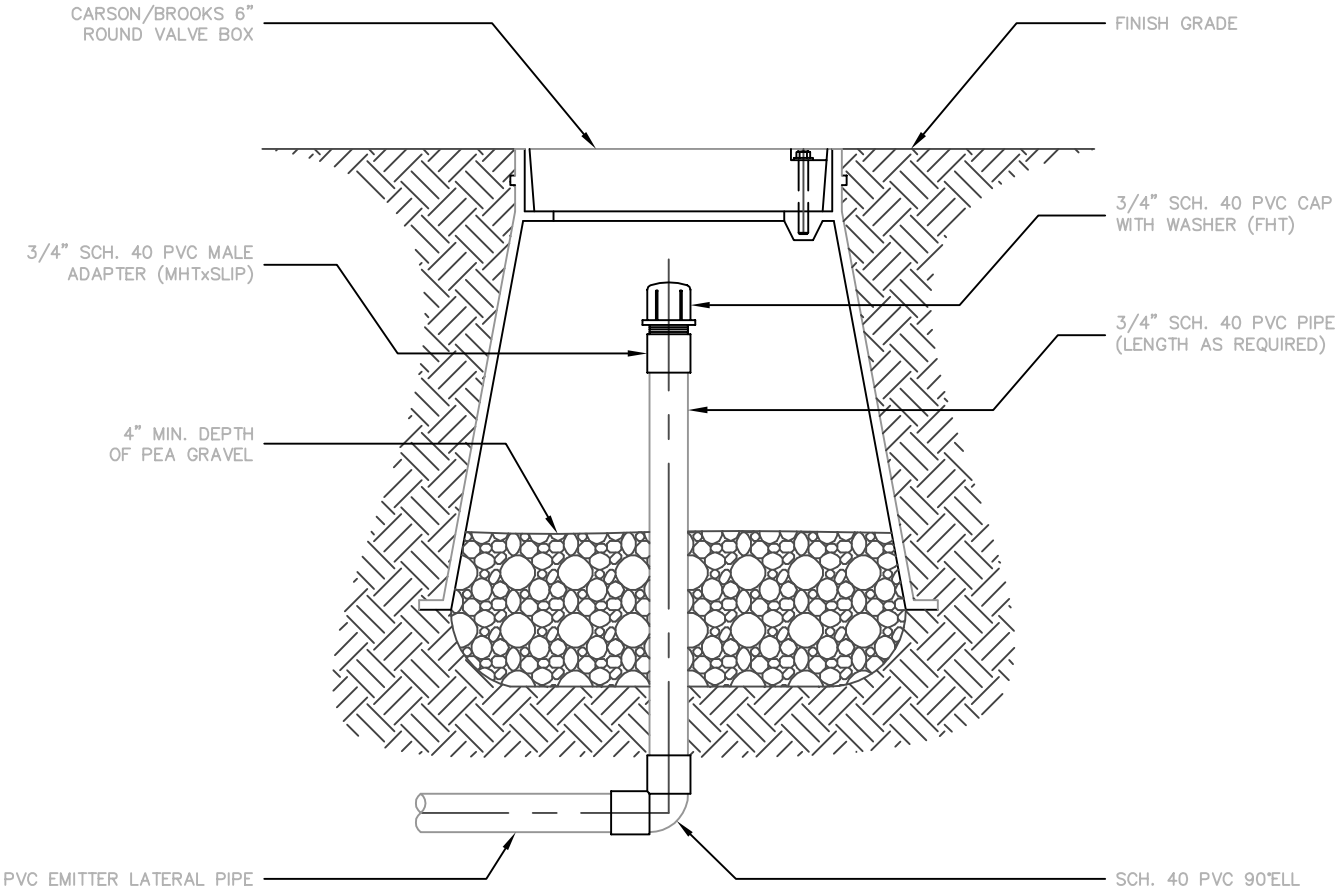

EMITTER FLUSH CAP ASSEMBLY

SCALE: NTS

REVISED: 1/5/00

DETAIL NO. 2648	City of Scottsdale Standard Details	EMITTER FLUSH CAP ASSEMBLY	DETAIL NO. 2648

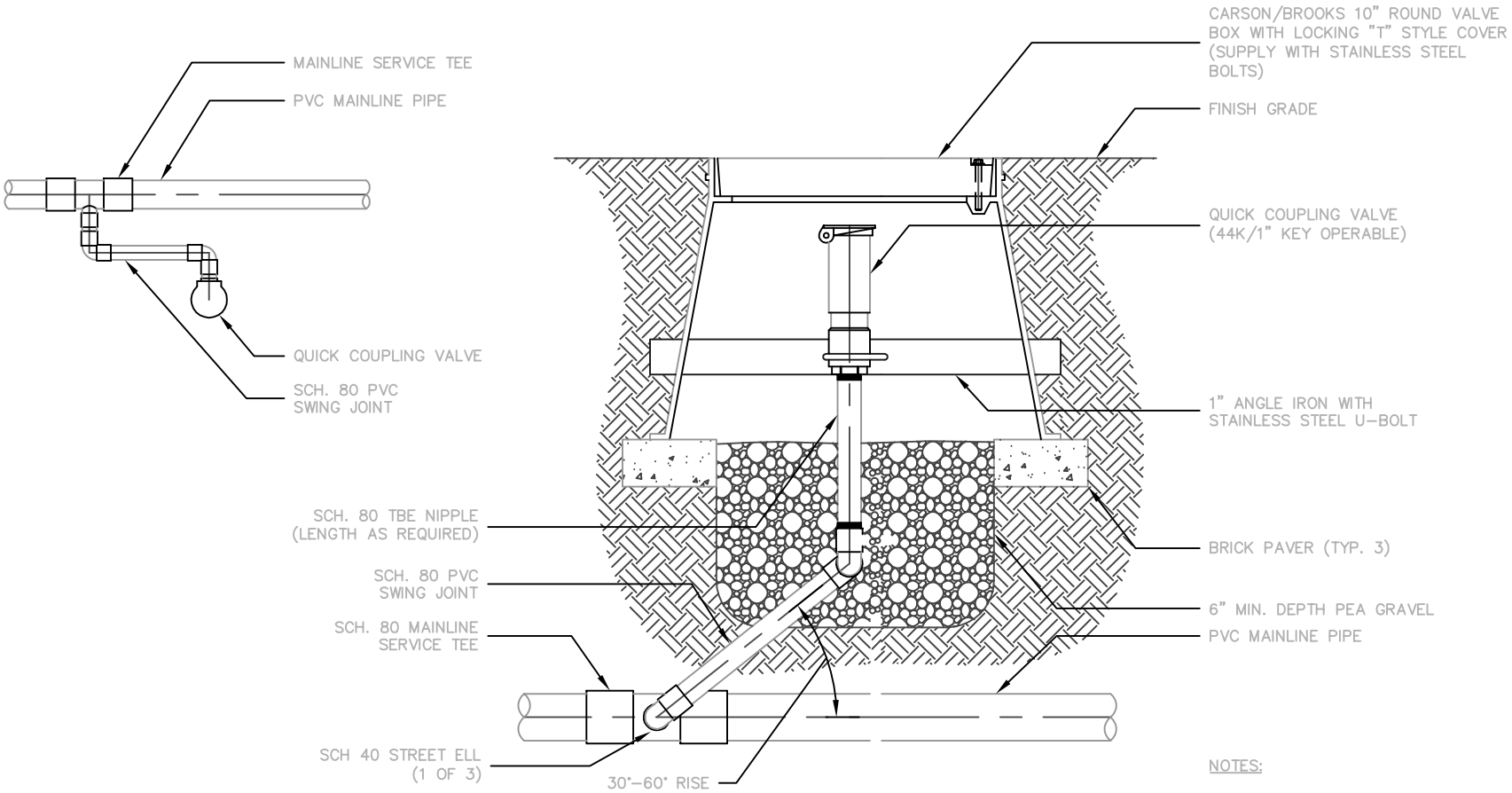

NOTES:

1. EACH QUICK COUPLER SHALL BE IN A SEPARATE VALVE BOX.
2. SWING JOINT SHALL BE THE SAME SIZE AS QUICK COUPLER VALVE.
3. NO PRE-FAB SWING JOINTS.

QUICK COUPLER ASSEMBLY

SCALE: NTS

REVISED: 2/26/01

DETAIL NO. 2649	City of Scottsdale Standard Details	QUICK COUPLER ASSEMBLY	DETAIL NO. 2649

NOTE:

1. BALL VALVE SHALL MATCH NOMINAL SIZE OF MAINLINE PIPE.

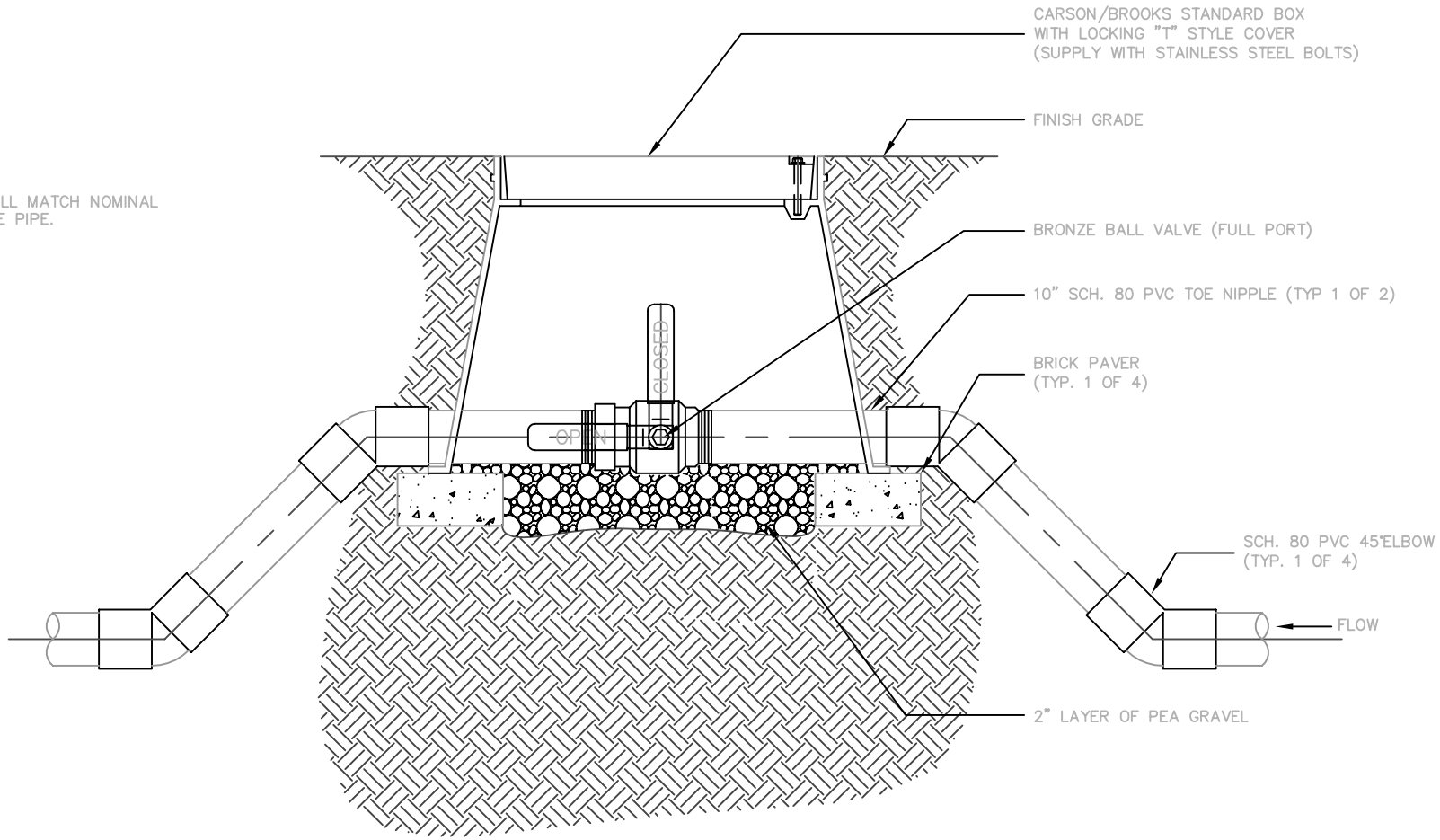

2-1/2" & SMALLER MAINLINE ISOLATION BALL VALVE ASSEMBLY

SCALE: NTS

REVISED: 4/25/02

DETAIL NO. 2650	City of Scottsdale Standard Details	1-1/2" & SMALLER MAINLINE BALL VALVE	DETAIL NO. 2650

NOTE:

1. GATE VALVE SHALL MATCH NOMINAL SIZE OF MAINLINE PIPE.
2. PROTECT VALVE BODY WITH 10MIL PLASTIC PRIOR TO INSTALLATION OF REBAR & SUPPORT BLOCK.

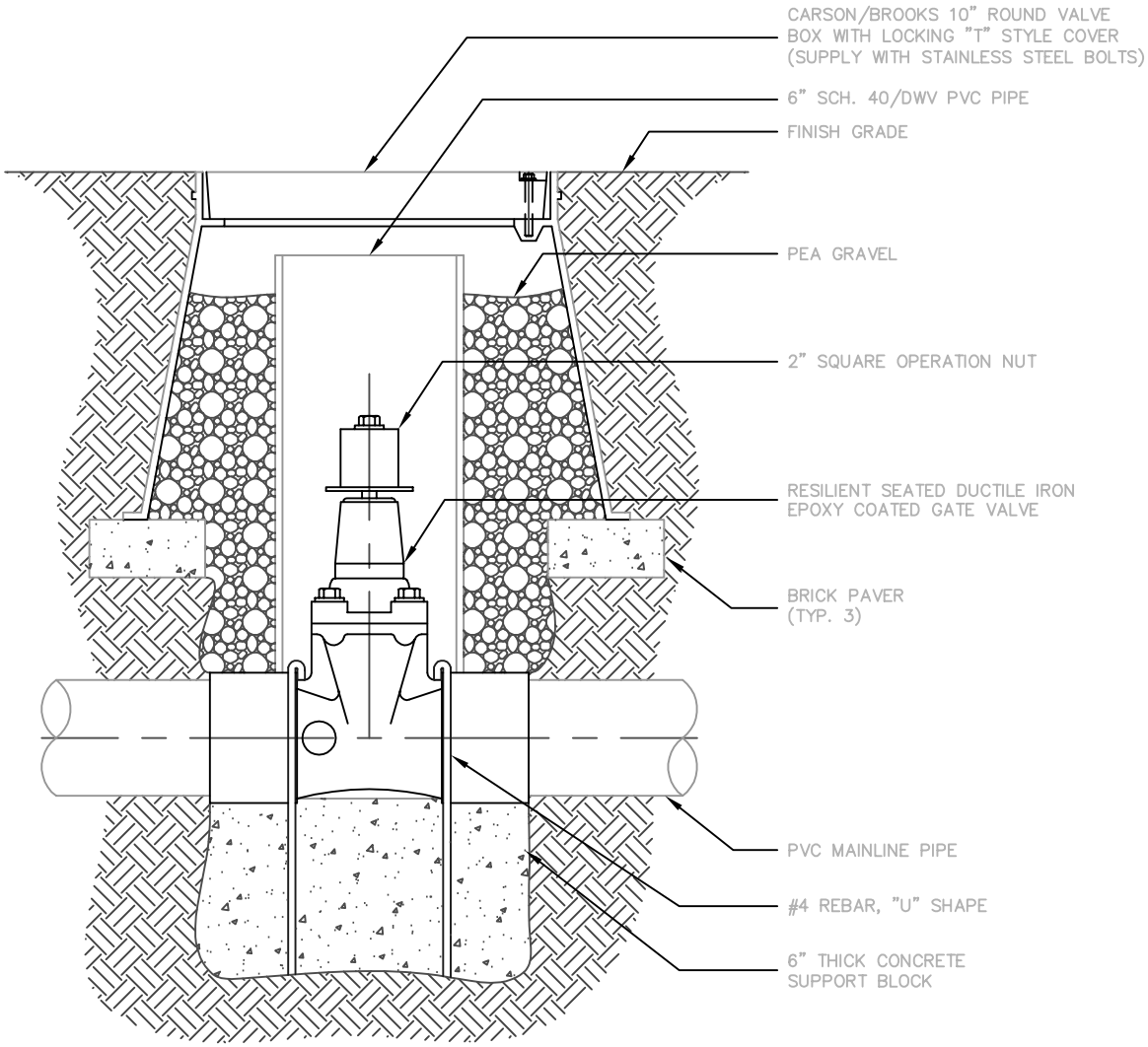

3" & LARGER MAINLINE ISOLATION GATE VALVE ASSEMBLY

SCALE: NTS

REVISED: 4/25/02

DETAIL NO. 2651	City of Scottsdale Standard Details	2" & LARGER MAINLINE ISOLATION GATE VALVE	DETAIL NO. 2651

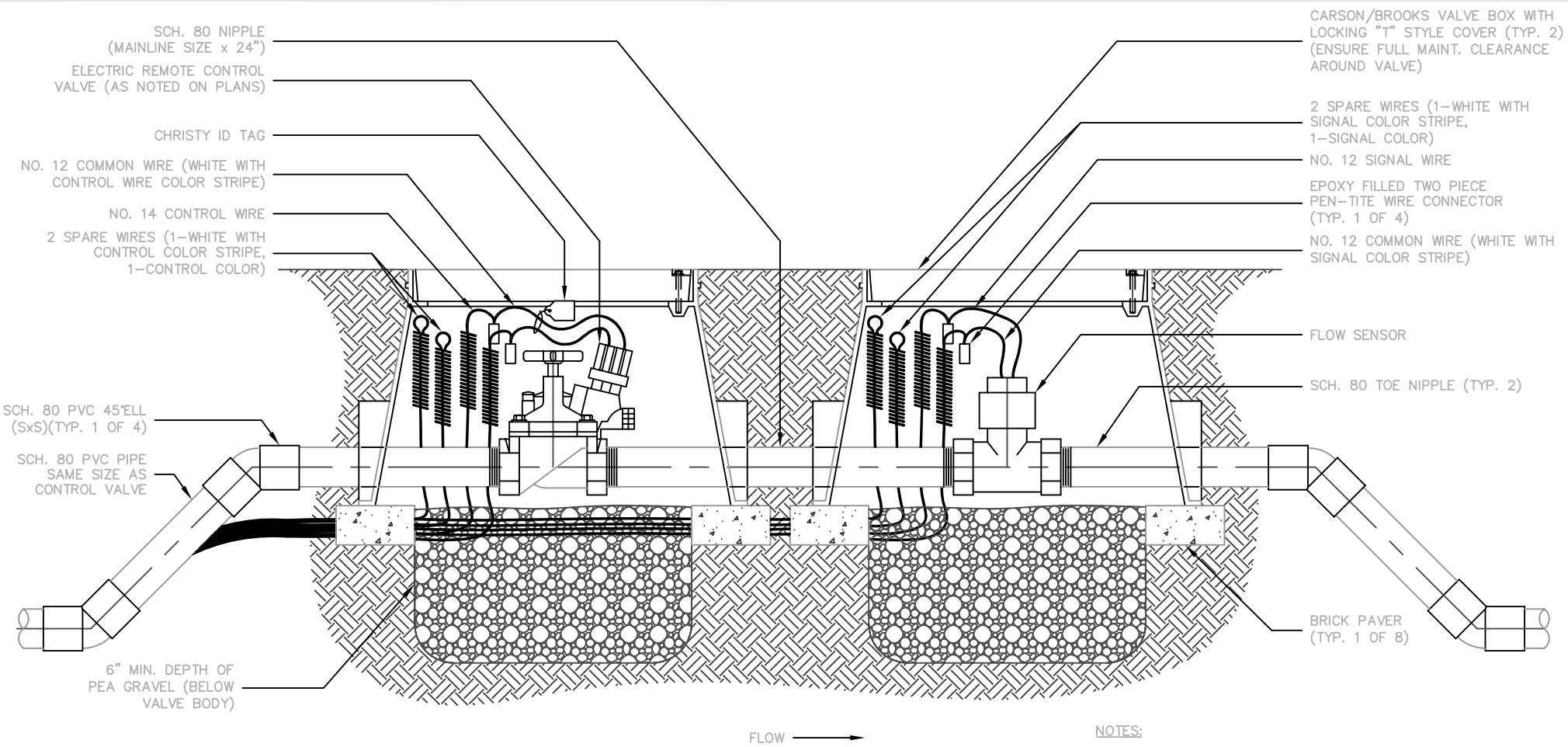

2" & SMALLER MASTER VALVE/ FLOW METER ASSEMBLY

SCALE: NTS

NOTES:

1. PROVIDE 30" SLACK WIRE IN 3/4" COILS FOR EACH WIRE ENTERING VALVE BOX.
2. INSTALL VALVE I.D. TAG WITH CONTROLLER IDENTIFICATION AND STATION NUMBER WHICH CORRESPONDS TO THE PLANS.
3. MAINTAIN 2" MIN.–4" MAX. DISTANCE BETWEEN TOP OF CONTROL VALVE AND BOTTOM OF BOX LID.
4. CONTROL AND SIGNAL WIRE FROM MASTER VALVE TO CONTROLLER TO BE SEPARATE COLOR FROM OTHER VALVE WIRE. (CONTROL AND SIGNAL COMMONS TO BE SEPARATE FROM ANY OTHERS COMMONS IN THE SYSTEM.)
5. A DATA INDUSTRIAL MODEL 600–30 PULSE OUTPUT TRANSMITTER IS REQUIRED TO BE MOUNTED INSIDE THE CONTROLLER CABINET (SEE CITY IRRIGATION SUPERVISOR FOR WIRING INFORMATION).

REVISED: 3/30/00

DETAIL NO. 2652	City of Scottsdale Standard Details	2" OR SMALLER MASTER VALVE / FLOW METER	DETAIL NO. 2652

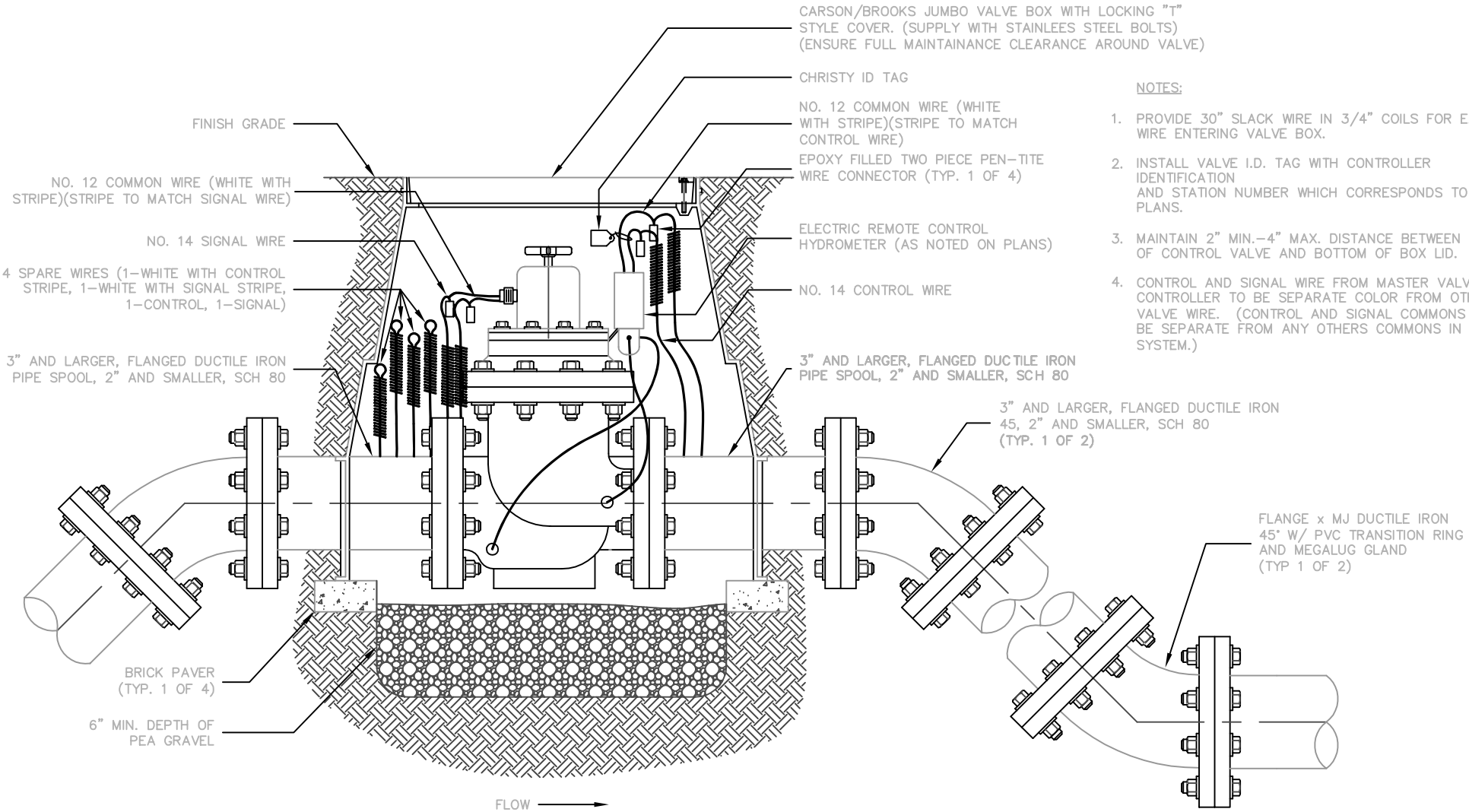

NOTES:

1. PROVIDE 30" SLACK WIRE IN 3/4" COILS FOR EACH WIRE ENTERING VALVE BOX.
2. INSTALL VALVE I.D. TAG WITH CONTROLLER IDENTIFICATION AND STATION NUMBER WHICH CORRESPONDS TO THE PLANS.
3. MAINTAIN 2" MIN.-4" MAX. DISTANCE BETWEEN TOP OF CONTROL VALVE AND BOTTOM OF BOX LID.
4. CONTROL AND SIGNAL WIRE FROM MASTER VALVE TO CONTROLLER TO BE SEPARATE COLOR FROM OTHER VALVE WIRE. (CONTROL AND SIGNAL COMMONS TO BE SEPARATE FROM ANY OTHERS COMMONS IN THE SYSTEM.)

REVISED: 4/25/02

MASTER VALVE / FLOW METER ASSEMBLY

SCALE: NTS

DETAIL NO. 2653	City of Scottsdale Standard Details	MASTER VALVE / FLOW METER	DETAIL NO. 2653

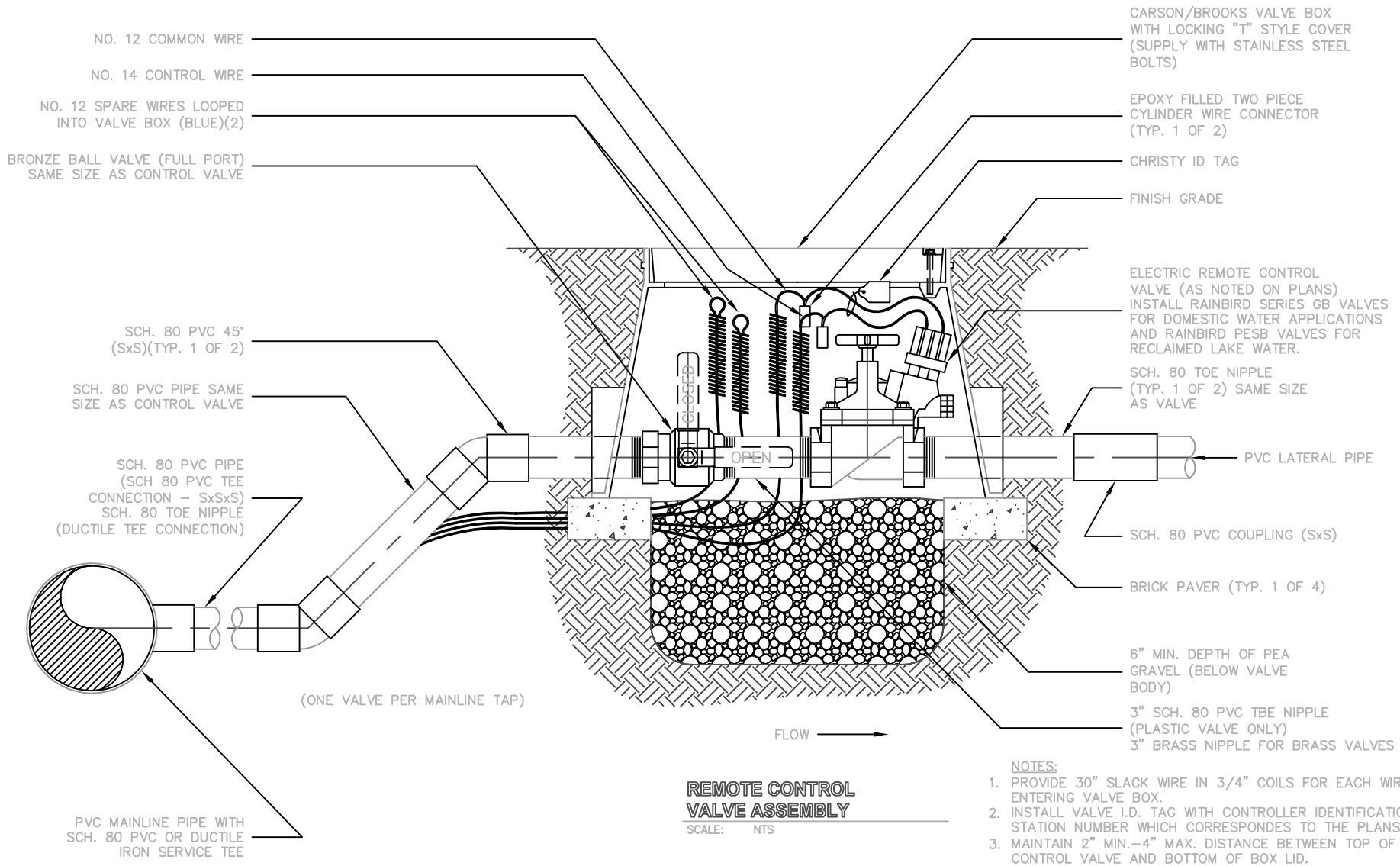

REMOTE CONTROL VALVE ASSEMBLY

SCALE: NTS

NOTES:

1. PROVIDE 30" SLACK WIRE IN 3/4" COILS FOR EACH WIRE ENTERING VALVE BOX.
2. INSTALL VALVE I.D. TAG WITH CONTROLLER IDENTIFICATION AND STATION NUMBER WHICH CORRESPONDES TO THE PLANS.
3. MAINTAIN 2" MIN.–4" MAX. DISTANCE BETWEEN TOP OF CONTROL VALVE AND BOTTOM OF BOX LID.
4. INSTALL D.C. LATCHING SOLENOIDS W/ D.C. CONTROLLERS.
5. FOR BRASS CONTROL VALVES, INSTALL 3" BRASS TBE NIPPLE BETWEEN BALL VALVE AND CONTROL VALVE

REVISED: 2/26/01

DETAIL NO. 2654	City of Scottsdale Standard Details	REMOTE CONTROL VALVE ASSEMBLY	DETAIL NO. 2654

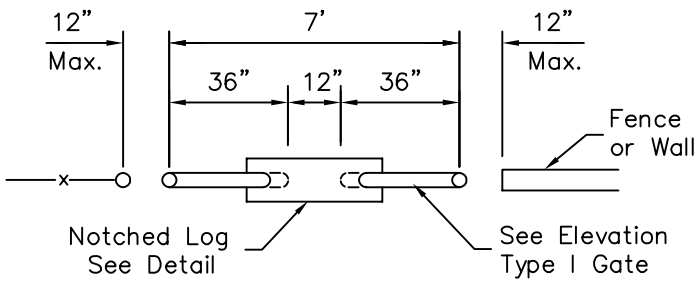

TYPE I GATE w/ NOTCHED LOG

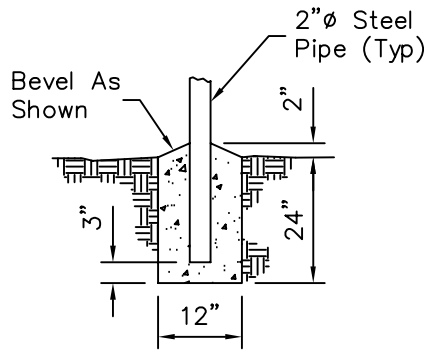

POST FOOTING DETAIL

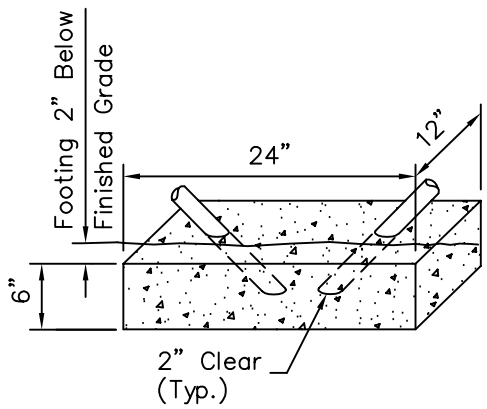

GATE FOOTING DETAIL

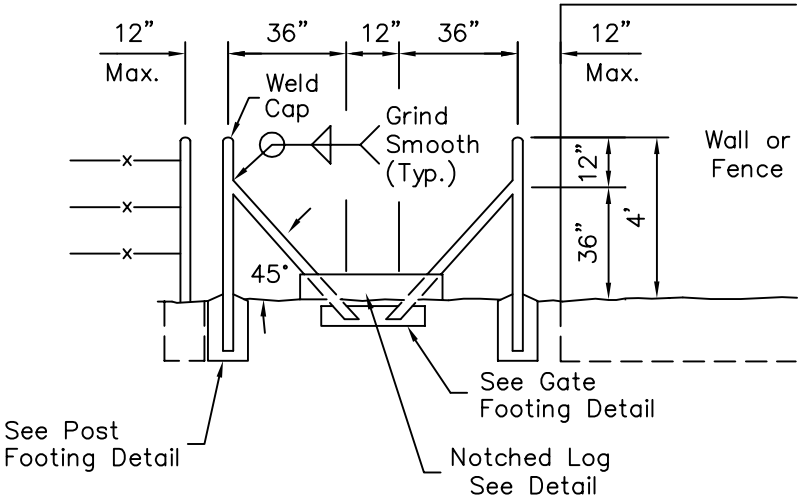

ELEVATION TYPE I GATE

NOTES:

1. All Concrete Shall Be Class "B".
2. Paint Rails Per ADOT Specifications. Color Per Plans.
3. Treated Wood Per MAG Section 779.

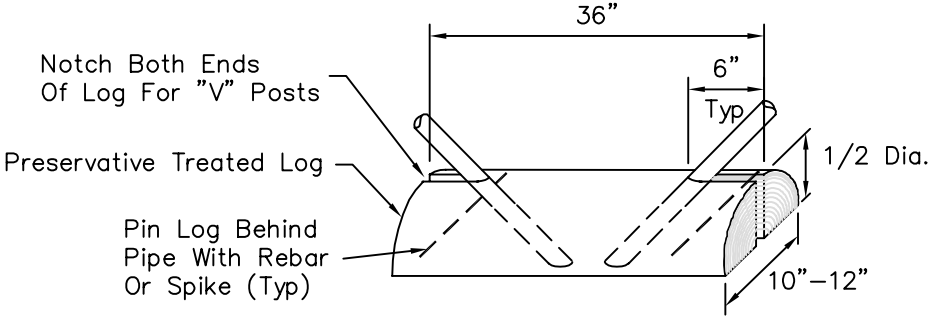

NOTCHED LOG DETAIL

DETAIL NO.		APPROVED BY:		DETAIL NO.
2680-1	City of Scottsdale Standard Details		TRAIL ACCESS GATES	2680-1

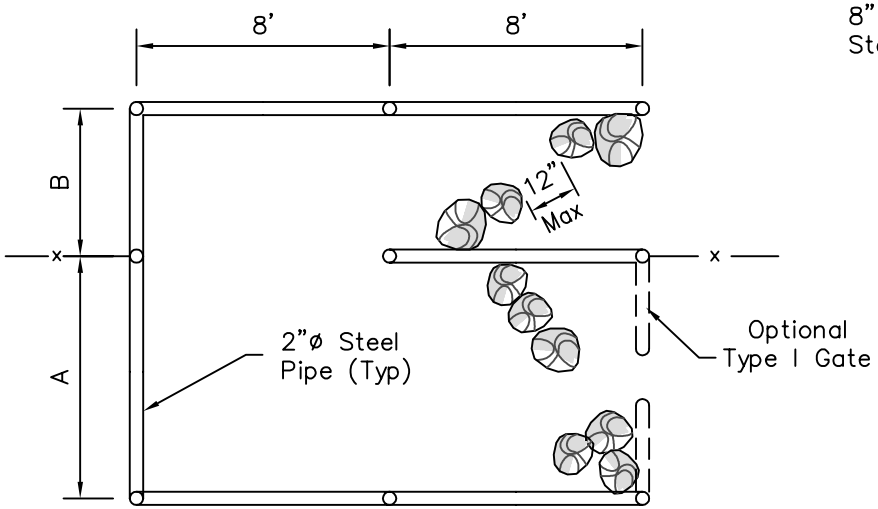

TYPE II GATE

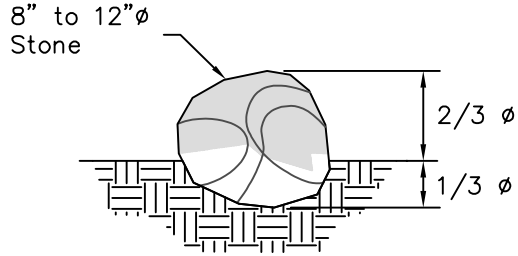

BURIED STONE DETAIL

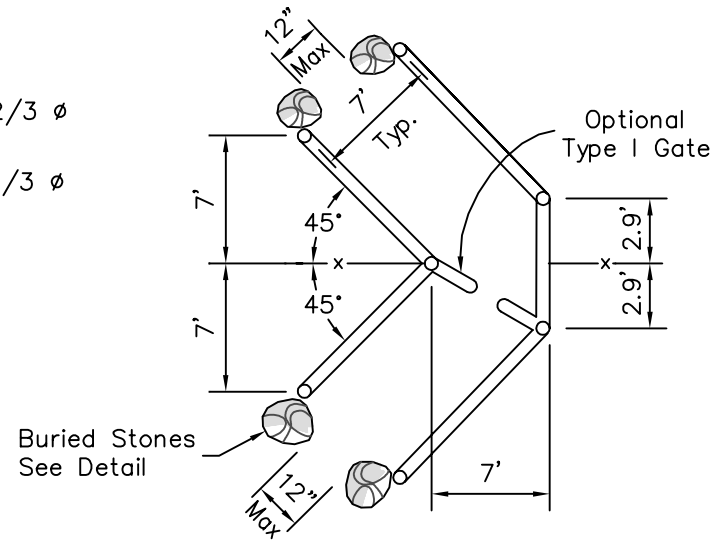

TYPE IV GATE

NOTE:

Gate barriers for Type II, III and IV gates shall be buried stones or Type I gate as shown on plan.

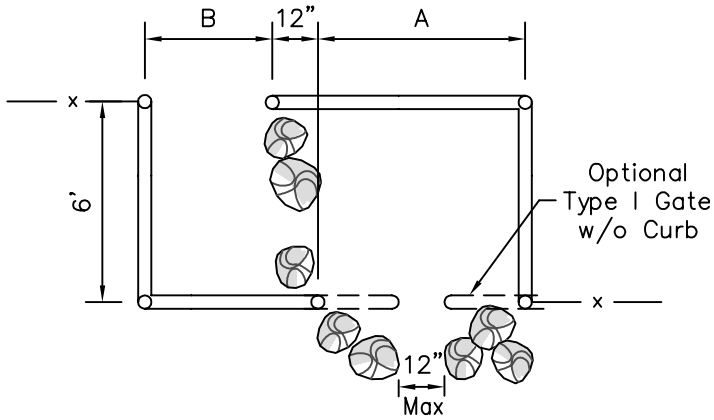

TYPE III GATE

TYPE II and III GATE DIMENSIONS		
GATE BARRIER	A	B
Type I	7'	4'
Buried Rocks	4'	4'

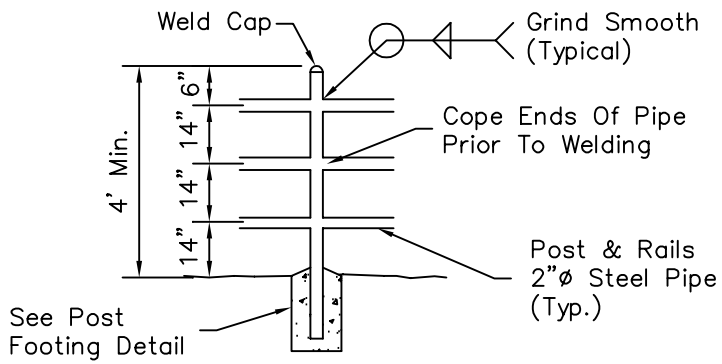

TYPICAL RAIL ELEVATION TYPE II, III & IV GATE

DETAIL NO.	City of Scottsdale Standard Details	APPROVED BY:	TRAIL ACCESS GATES	DETAIL NO.
2680-2				2680-2

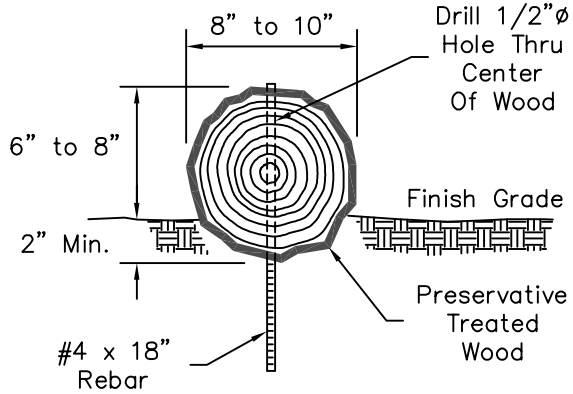

REBAR SECURED WOOD BARS

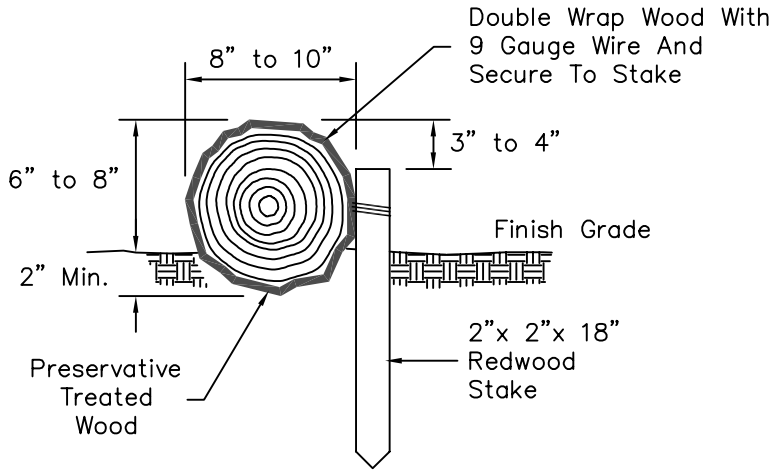

WIRE SECURED WOOD BARS

NOTES:

1. Provide water bars at a maximum 100' interval where trail grade is equal to or greater than 6% and at all locations as shown on plans.
2. Treated wood per MAG Section 779.

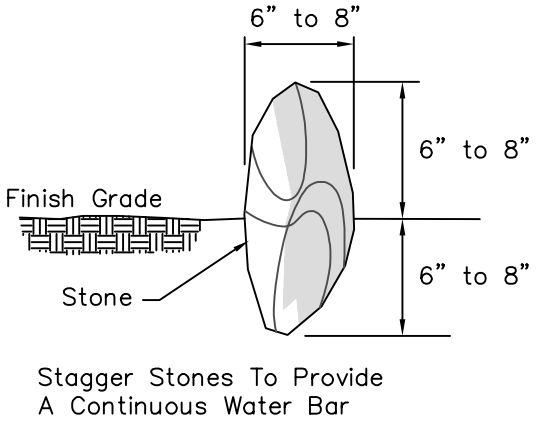

STONE BARS

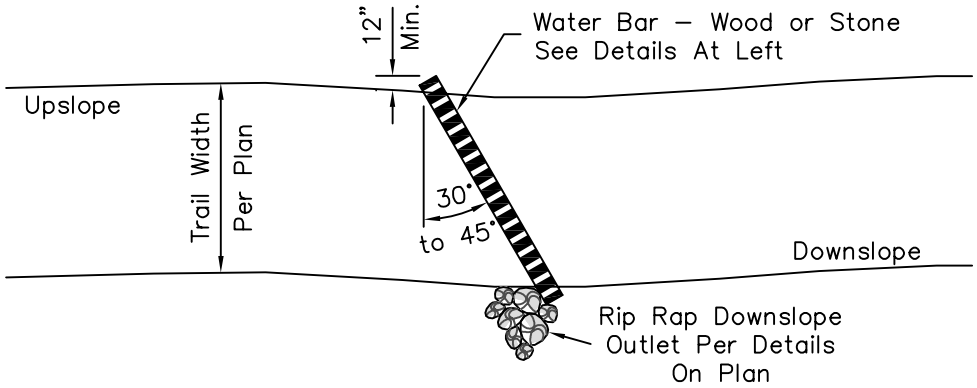

WATER BARS
PLAN

DETAIL NO.	City of Scottsdale Standard Details	APPROVED BY:	TRAIL WATER BARS	DETAIL NO.
2681				2681

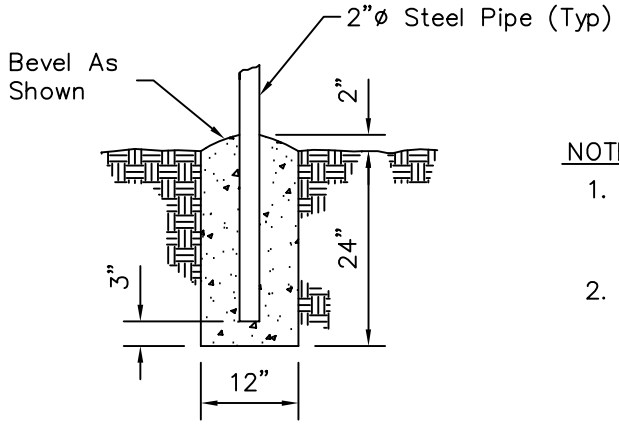

CONCRETE FOOTING DETAIL

NOTES:

1. Paint Rails Per ADOT Specifications. Color Per Plan.
2. Treated Wood Posts Per MAG Section 779.

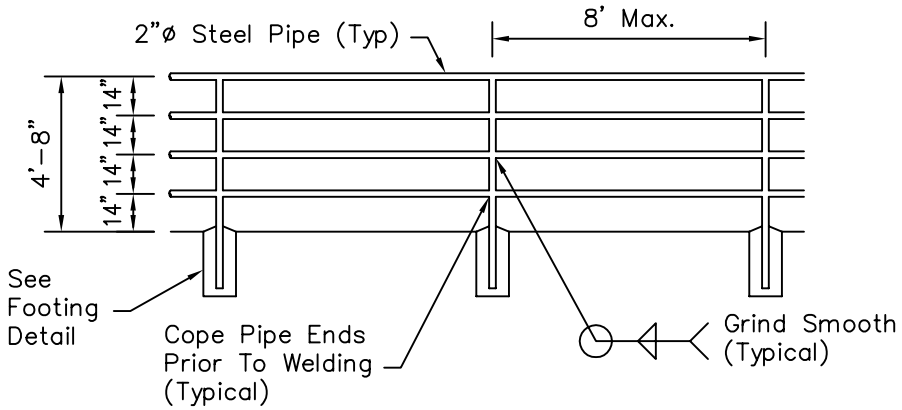

STEEL RAIL

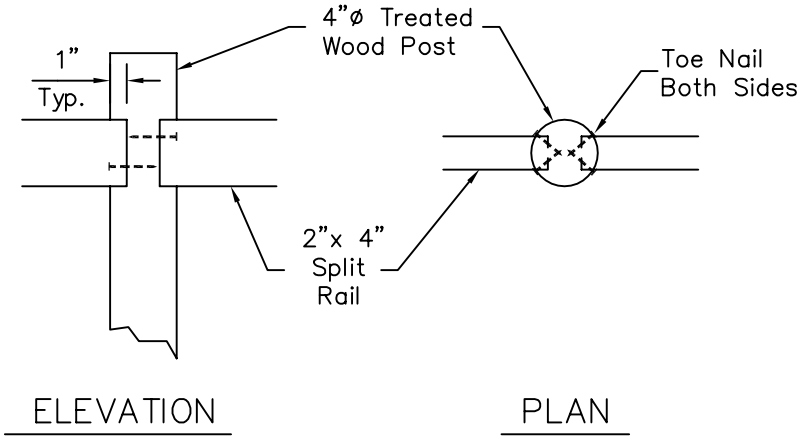

POST CONNECTION DETAIL

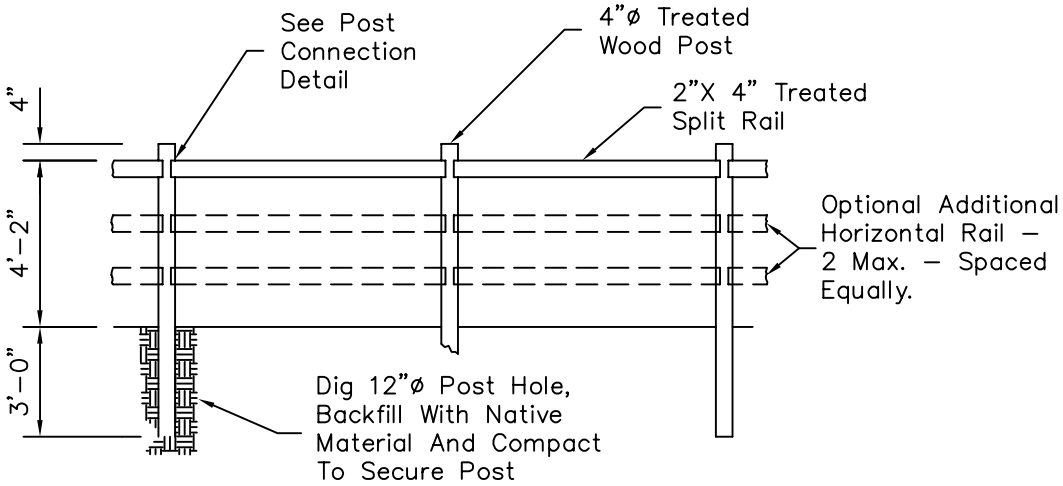

POST AND RAIL

DETAIL NO.	City of Scottsdale Standard Details	APPROVED BY:	TRAIL SAFETY BARRIERS	DETAIL NO.
2682				2682

NOTES:

1. Signs shall conform to C.O.S. Supplemental Specifications, Section 402.3.
2. Signs to be mounted on square perforated tubing per C.O.S. Std Det 2131 within C.O.S. Right–of–Way. Treated wood post may be used for trail markers located outside C.O.S. Right–of Way.
3. Legends shall be reflectorized white vinyl sheeting on a green or brown vinyl back–ground unless otherwise approved by the City of Scottsdale.

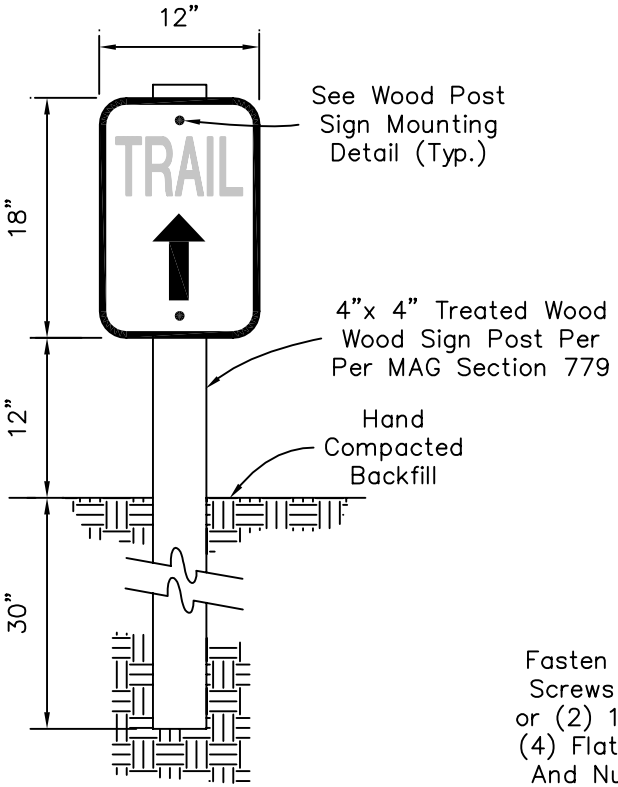

TRAIL MARKER

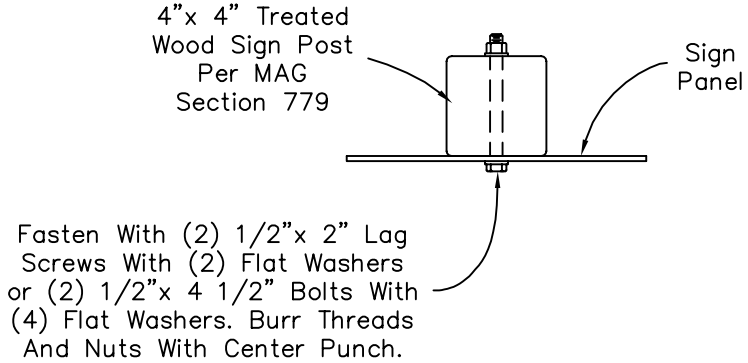

WOOD POST SIGN MOUNTING DETAIL

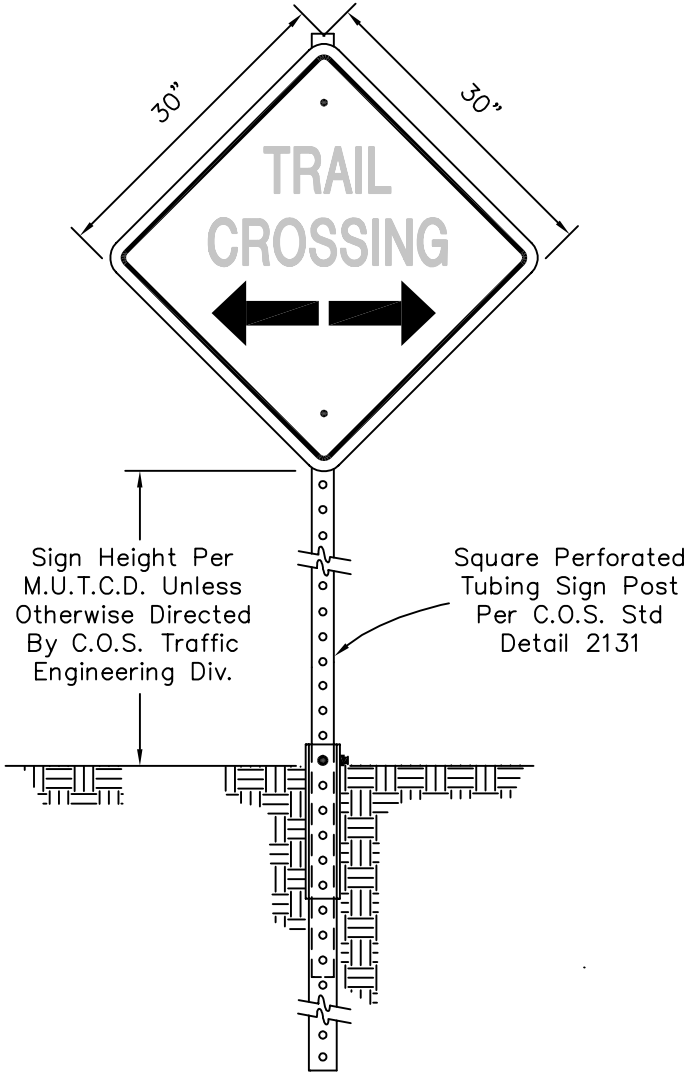

TRAIL CROSSING SIGN

DETAIL NO.	City of Scottsdale Standard Details	APPROVED BY:	TRAIL SIGNS	DETAIL NO.
2683				2683