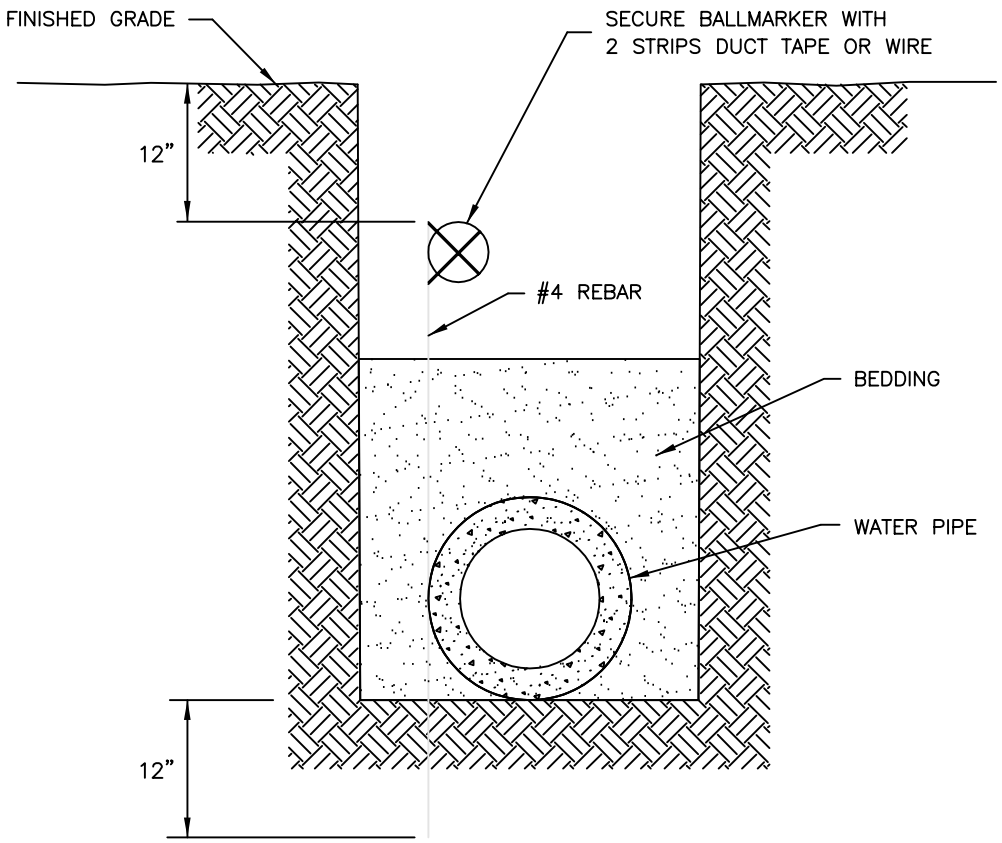

DETAIL NO. 2397

City of Scottsdale Standard Details

ELECTRONIC BALLMARKER PLACEMENT

DETAIL NO. 2397