REVISED 1/4/93

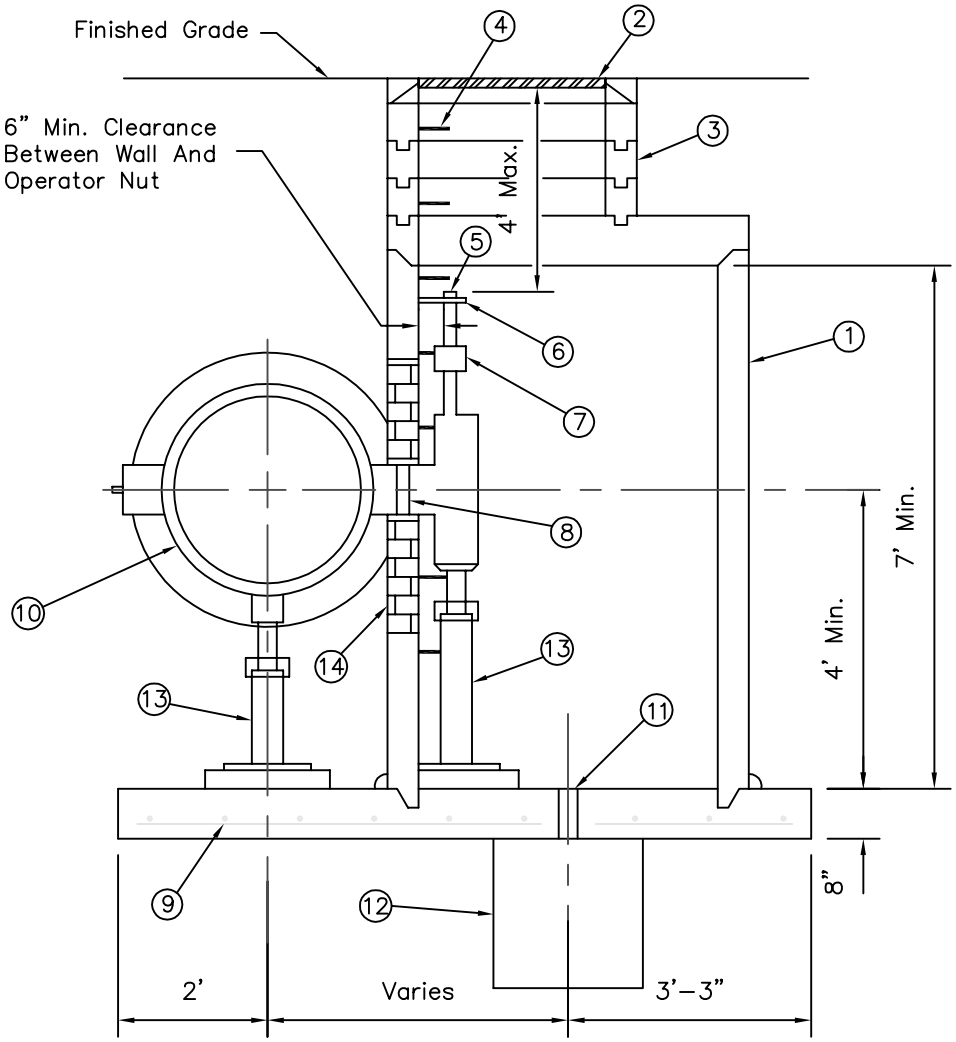

SECTION

LEGEND

1. 48" I.D. Manhole Shaft Per MAG Std. Detail 420, Type "B" Top
2. 30" Manhole Frame & Cover Per MAG Std. Detail 424
3. Grouted Adjusting Rings
4. Polypropylene Manhole Steps Per MAG Std. Detail 428, 12" Spacing Typical
5. Operator Nut
6. Wall Bracket
7. Packing Gland
8. 6" Extension
9. #4 Rebar 12" On Center Each Way 2" Clear Typical
10. Butterfly Valve
11. 3" Diameter Drain
12. 8 Cu. Ft. Gravel Sump
13. Adjustable Pipe Saddle Support
14. Rectangular Cut-Out In Manhole Shaft, Fill Space Between Shaft And Pipe With 1" Sheet Foam, Brick And Mortar

DETAIL NO.	City of Scottsdale Standard Details	APPROVED BY:	BUTTERFLY VALVE OPERATOR MANHOLE	DETAIL NO.
2305-1				2305-1

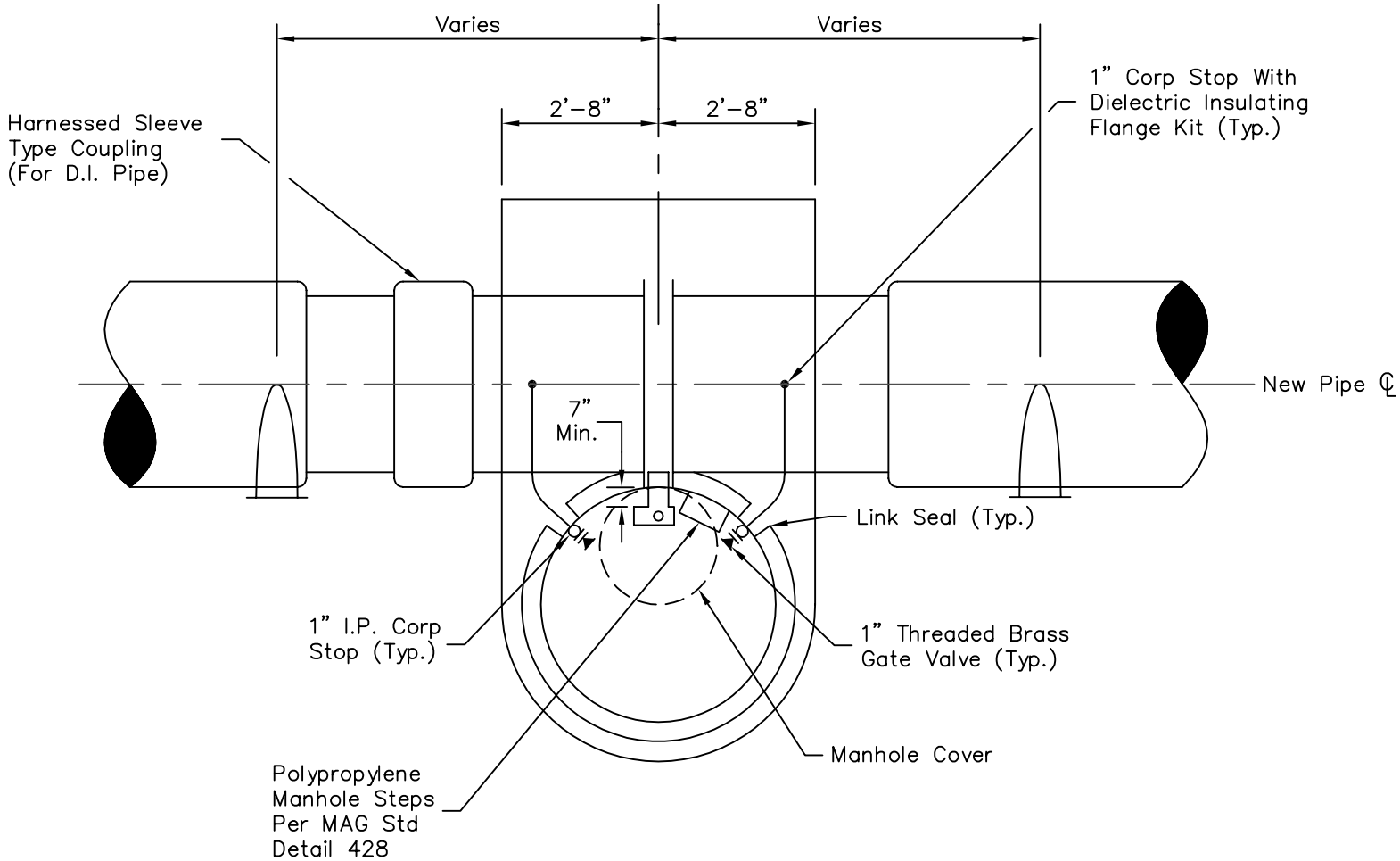

PLAN

REVISED 1/14/93

DETAIL NO.	City of Scottsdale Standard Details	APPROVED BY:	BUTTERFLY VALVE OPERATOR MANHOLE	DETAIL NO.
2305-2				2305-2

REVISED 2/22/99

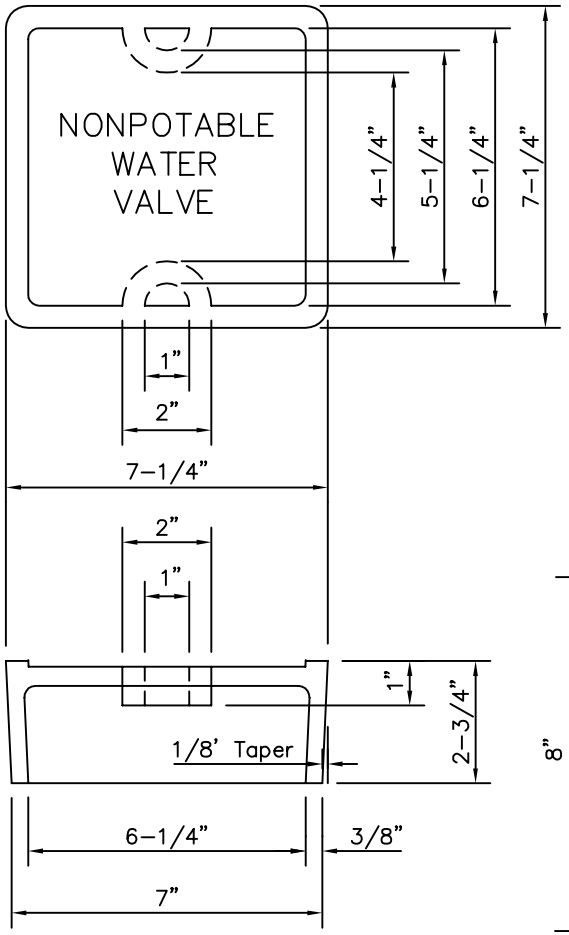

NOTES

1. Round bottom for riser pipe, square top for cover.
2. All materials shall be cast iron per ASTM A48, Class 30B.
3. Nonpotable water valve box to be installed per M.A.G. Std. Detail 391.
4. The cast iron lid shall be marked "Nonpotable Water Valve" on the top side. Letters shall be 1" each and raised 1/8".

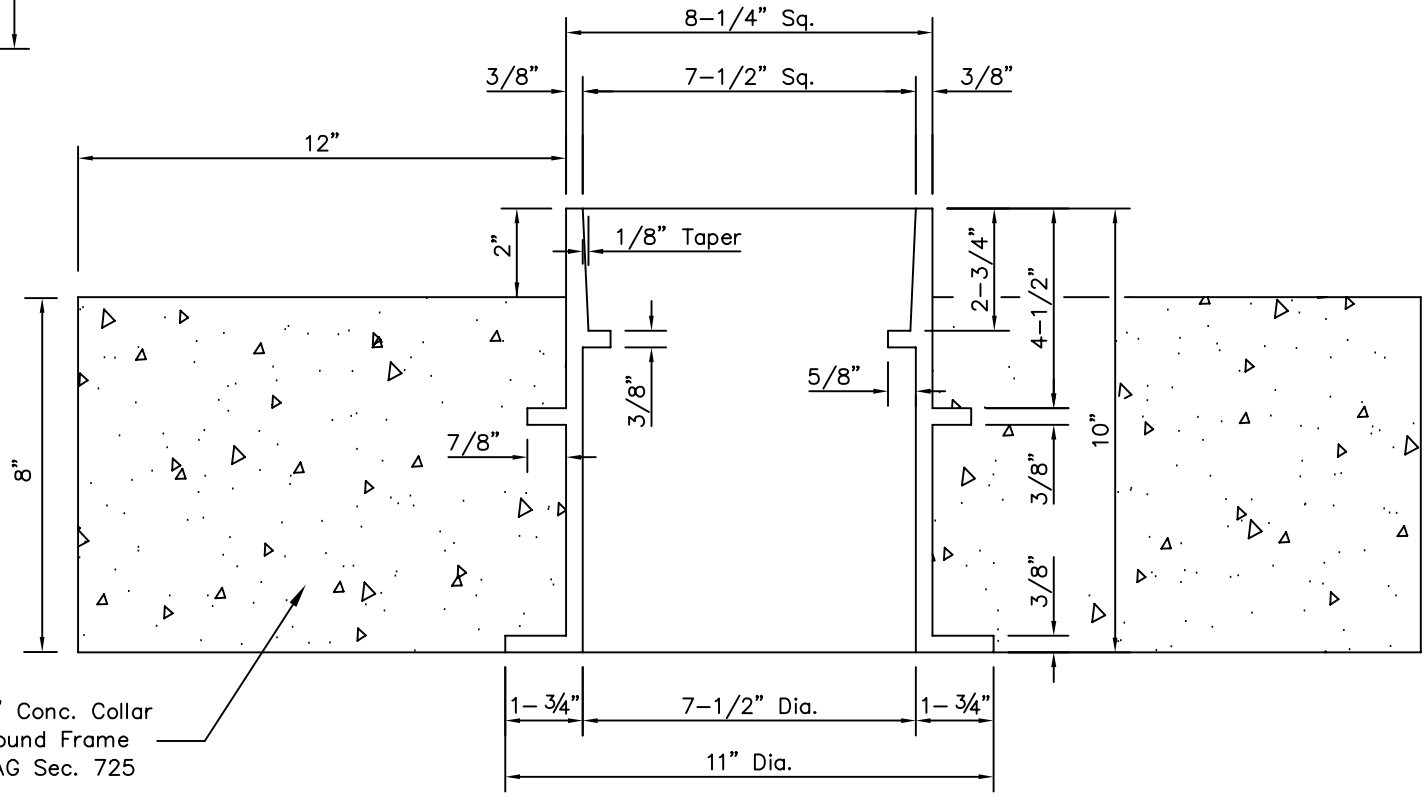

DETAIL NO.		APPROVED BY:		DETAIL NO.
2315	**City of Scottsdale Standard Details**		**NONPOTABLE WATER VALVE BOX & COVER**	2315

REVISED 3/30/00

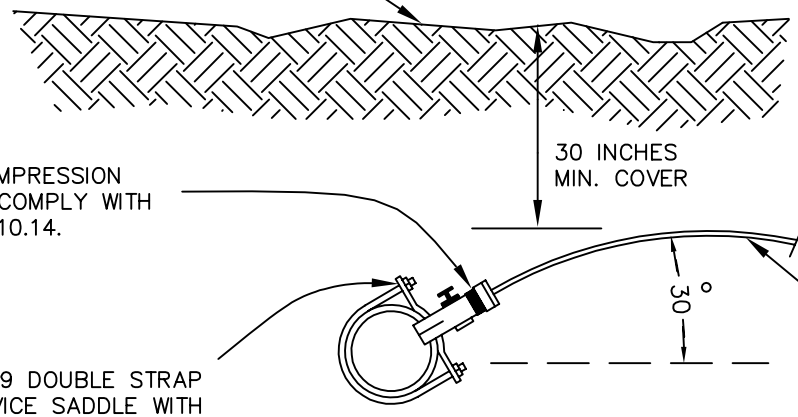

CORP. STOP:
PACK JOINT COMPRESSION FITTINGS MUST COMPLY WITH MAG SECTION 610.14.

JONES #J-979 DOUBLE STRAP BRONZE SERVICE SADDLE WITH I.P. THREAD OR APPROVED EQUAL FOR ALL DUCTILE IRON, A, C, AND CAST IRON PIPE. FULL CIRCLE BRONZE SERVICE SADDLE FOR ALL PVC PIPE.

SERVICE LINE:
TYPE K SOFT COPPER PER MAG SPEC. 754.1 FOR 3/4", 1", 1 1/2" AND 2" SERVICES.

METER AND METER COUPLING TO BE INSTALLED BY CITY FORCES ONLY UPON APPLICATION FOR INSTALLATION AND PAYMENT OF PREVAILING FEES.

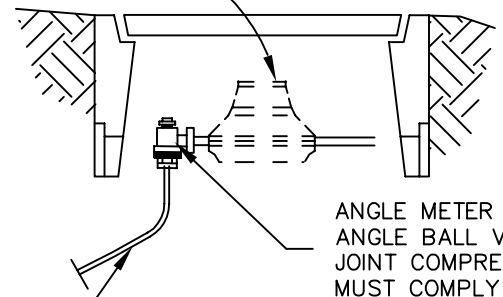

ANGLE METER STOP OR ANGLE BALL VALVE PACK JOINT COMPRESSION FITTINGS MUST COMPLY WITH MAG SECTION 610.14 AND BE SUITABLE FOR TESTING TO 125% OF DESIGN PRESSURE, OR 200 PSI, WHICHEVER IS GREATER

NOTE:
1. All taps must be made using a service saddle.
2. All service line sizes shall have the pack joint compression fittings for corp. stops and meter stops.
3. Where a contractor is installing new water lines, he shall also install the water service connection. The installation shall include the service saddle, corp. stop, service pipe, appurtenant fittings, meter stop, concrete meter box and box cover, per M.A.G. Specifications.
4. Copper service lines in the 3/4", 1", 1 1/2", and 2" sizes that cross streets will be one continuous piece. Only with the express written consent of Water & Wastewater Operations will joints be permitted under a road. When this occurs, pack joint fittings will be required; no soldered joints will be permitted.
5. When all or part of a development is to be served by existing City of Scottsdale water mains, only authorized City of Scottsdale Water and Wastewater Operations personnel shall install the water service connection.

DETAIL NO.	City of Scottsdale Standard Details	WATER SERVICE LINE CONNECTION	DETAIL NO.
2330			2330

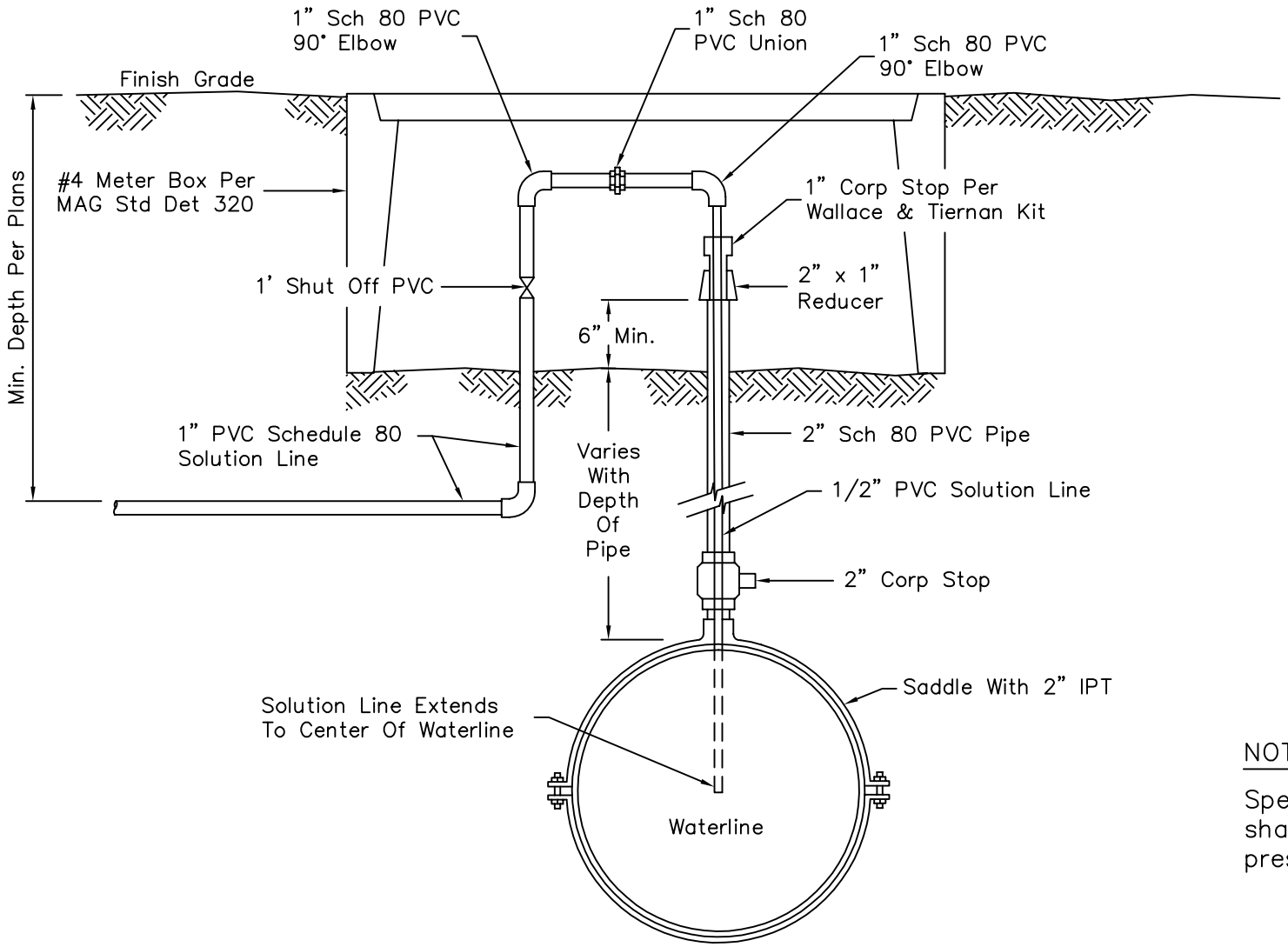

NOTE:

Specifications on all fittings shall exceed the maximum pressures of the system.

REVISED 3/11/94

DETAIL NO.	City of Scottsdale Standard Details	APPROVED BY:	CHLORINE INJECTION TAP FOR UNDERGROUND WATERLINES	DETAIL NO.
2332				2332

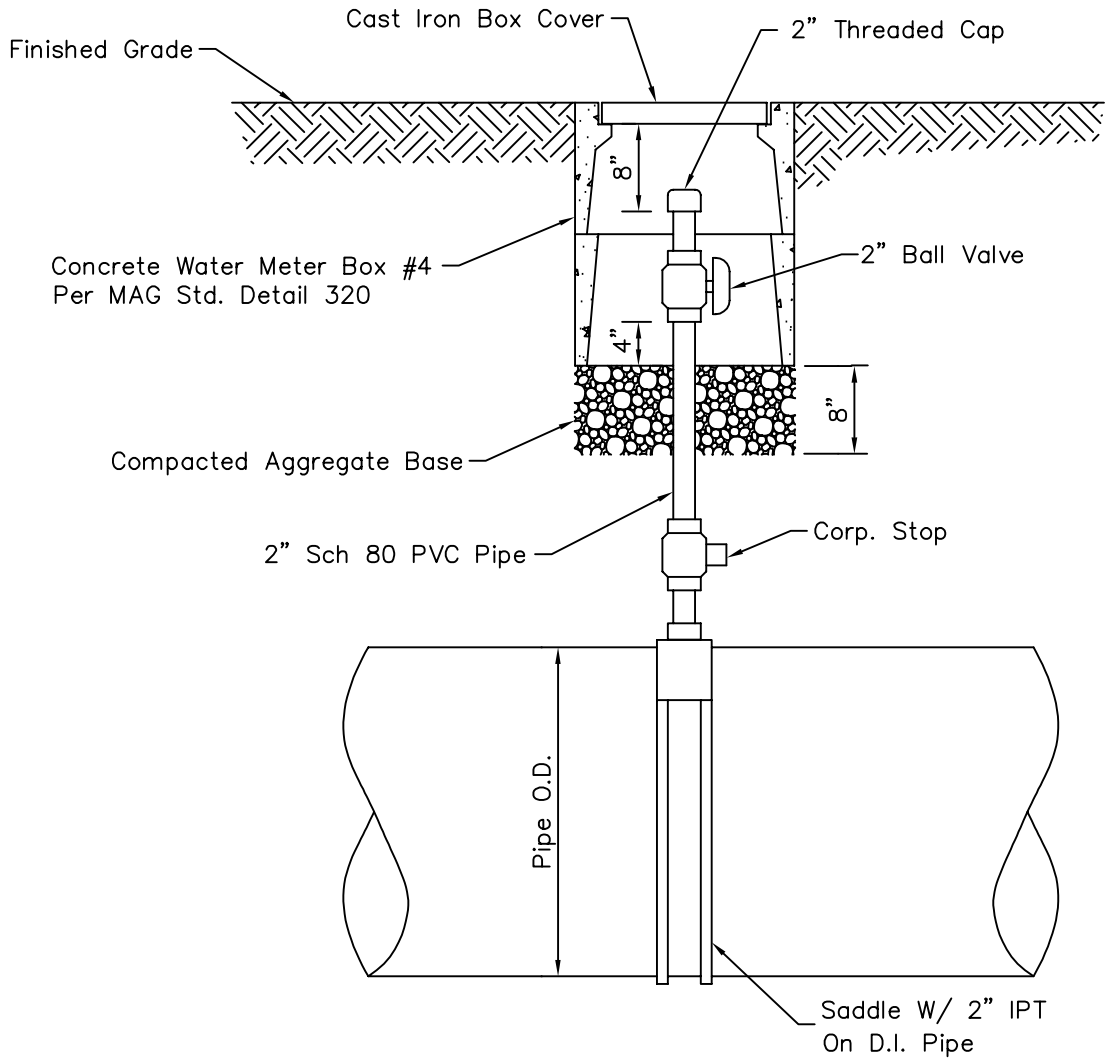

REVISED 1/4/93

DETAIL NO.	City of Scottsdale Standard Details	APPROVED BY:	TAP FOR FUTURE CHLORINE INJECTION	DETAIL NO.
2333				2333

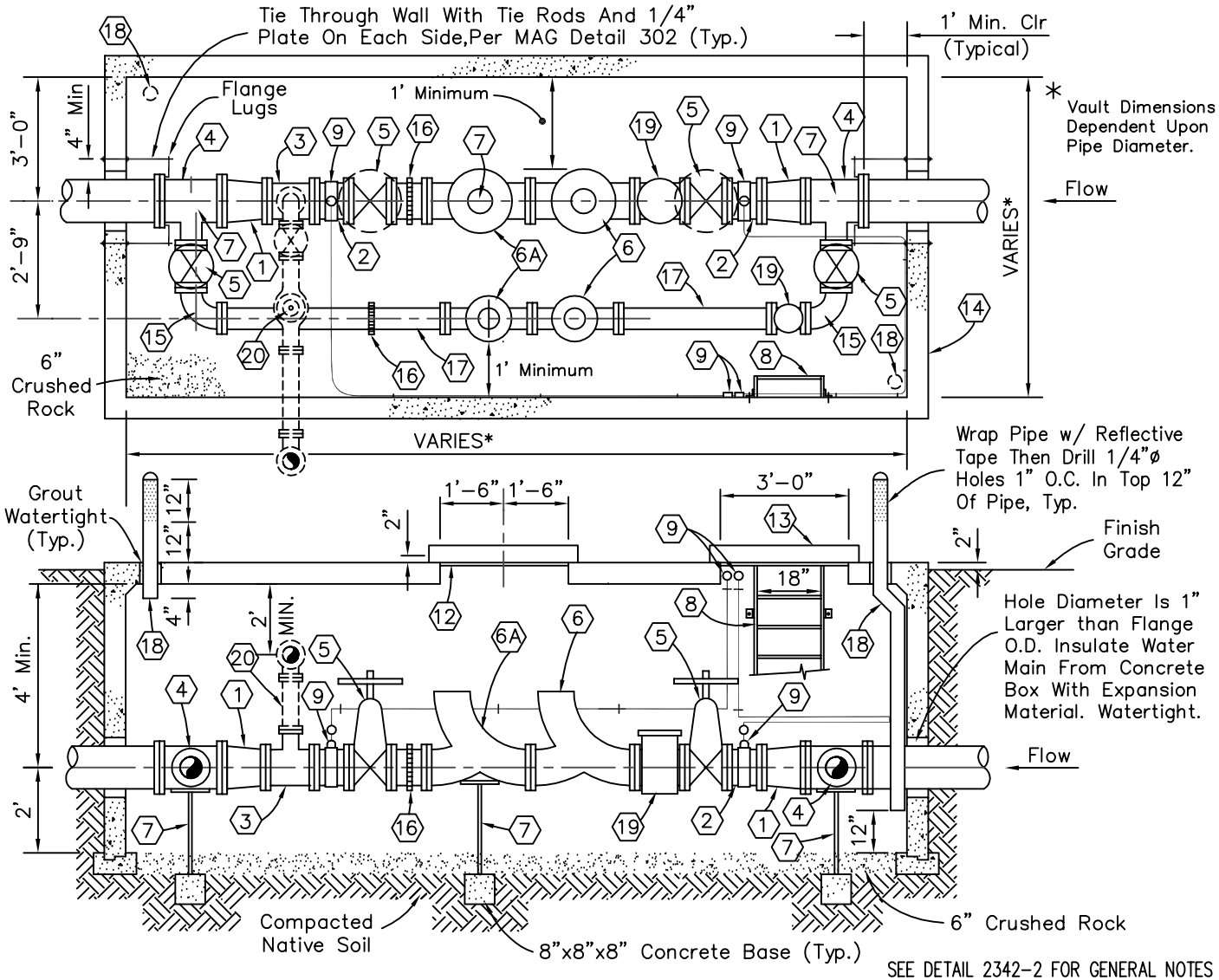

SEE DETAIL 2342-2 FOR GENERAL NOTES

NOTES

1. D.I.P. Flg Concentric Reducer
2. D.I.P. Flg x Flg Spool Piece
3. D.I.P. Flg x Flg Tee. Install Only When Detail 2342-2 Is Used.
4. D.I.P. Flg Reducing Tee
5. Flg NRS Resilient Wedge Gate Valve, Inside Epoxy Coated, Low Zinc Stem w/ Wheel Handle
6. Flg PRV Bermad Model 723-20-V-I-U w/ Valve Position Indicator & Low Flow V-Port Plug And Must Have Stainless Steel Pilot Tubing, Or Approved Equal.

6A. Flg PRV Bermad Model 723-20-V-I-U w/ Valve Or Approved Equal Will Be Installed When Pressure Differential Is 100 psi Or Greater.

7. 4" Dia Galv Adjustable Pipe Supports w/ 1" Adj. Rod And Nut On 8"x 8"x 8" Concrete Base.
8. Galv Access Ladder Bolted To Wall, 6" Stand Off.
9. Saddle With 1" Corp., 3/8" Brass Reducer, 3/8" 3/8" Brass Tee w/ Oil Filled 0-200 Pressure Gauge. Install 3/8" Stainless Tubing Strapped To Wall As Shown w/ Oil Filled Gauges Mounted At Access Door. Gages To Be Readable From Outside Vault.
12. For 8" Valves Or Larger Install Utility Vault Raised/ Adjustable Access Door, Model 3636, Or Approved Equal, Centered Over Main Valves For Removal.
13. Utility Vault Raised/Adjustable Steel Access Door For Inspection, Model 3636 Or Approved Equal. Place In Corner With Ladder.
14. Precast Concrete Water Utility Vault, Per MAG Std Det 321 & 345-1, Inside Dimensions Vary Depending On Pipe Size.
15. D.I.P. Flg 90° Elbow
16. Victaulic Coupling Or Approved Equal w/ All Thread Tie Rods.
17. D.I.P. Flg Pipe Spool
18. 4" Galv. Steel Vent Pipe With Cap. Strap Pipe To Wall. Install Vents In Unpaved Areas Only.
19. Basket Type Strainer
20. 4" Pressure Relief Bermad Model 730-I-U w/ Valve Position Indicator Or Approved Equal Required When Pressure Differential Meets Or Exceeds 100 PSI. See Detail 2342-2.

* Engineer to note direction of flow and pressure setting on the plans.

REVISED 2/27/01

DETAIL NO. 2342-1	City of Scottsdale Standard Details	PRESSURE REDUCING VALVE	DETAIL NO. 2342-1

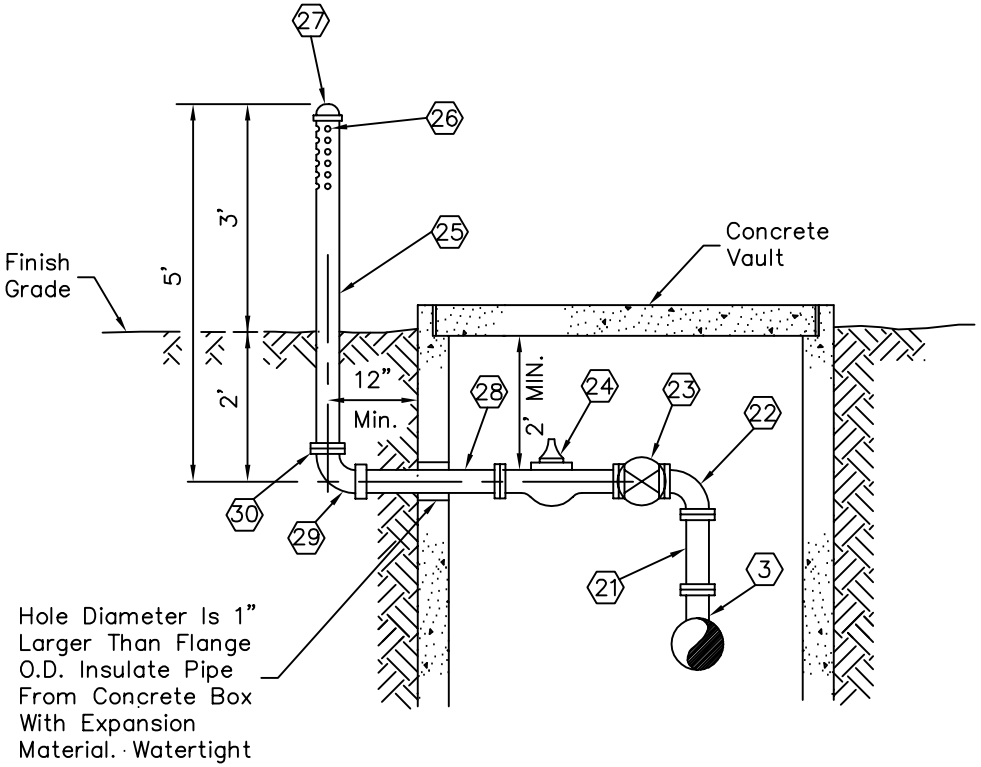

PRESSURE RELIEF OUTLET ASSEMBLY DETAIL

SEE NOTE 20 DETAIL 2342–1

NOTES

3 Flg x Flg Tee, See Detail 2342–1

21 4" Flg Connecting Piece

22 4" DIP Flg x Flg 90° Elbow, w/ Restrained Joints (Meg A Lug Or Approved Equal)

23 4" Flg NRS Resilient Wedge Gate Valve, Inside Epoxy Coated, Low Zinc Stem w/ Handwheel

24 4" Flg PRV Bermad Model 730–I–U Or Approved Equal, Epoxy Coated w/ Valve Position Indicator

25 4" SCH. 40 Steel Pipe (Painted Desert Beige)

26 6 Rows 2" O.C. Of 3–1"ø Holes, 180° Spray Pattern

27 4" SCH 40 Steel Cap (Threaded)

28 4" Ductile Pipe Spool

29 4" DIP MJ x Flg 90° Elbow

30 Flanged Connection w/ Breakaway Bolts

GENERAL NOTES

1. All pipe and valves are to be rated per system pressure.
2. Pilot lines for all controls will be stainless steel tubing.
3. Stainless tubing bends will be uniform and made with a tubing bender.
4. Bypass line (small PRV) shall be 4" Min. D.I.P.
5. Airvents and relief outlet riser pipe shall not be located within 12 feet of an existing edge of pavement or within 2 feet of a barrier type curb or 2' back of sidewalk.

REVISED 2/27/01

REVISED 2/27/01

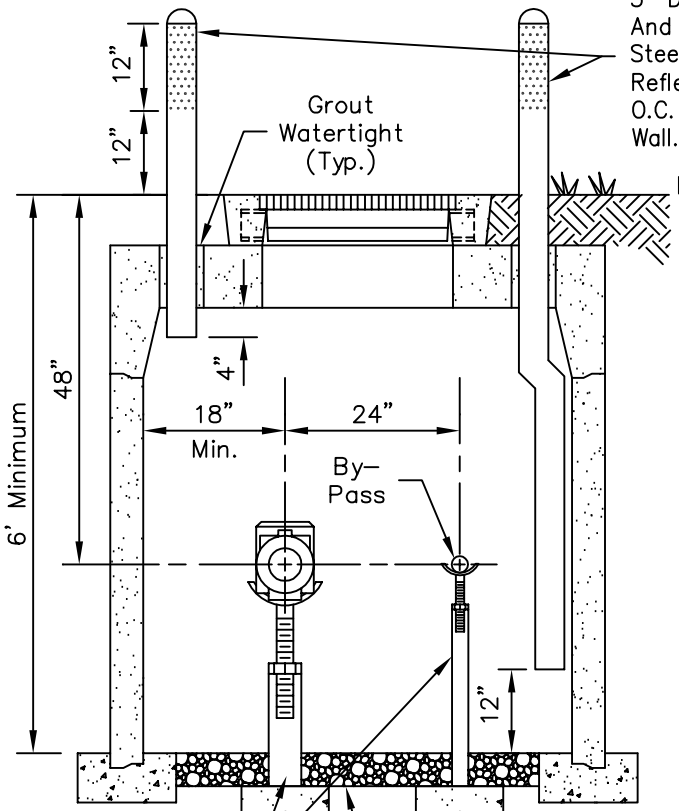

SECTION A–A

3" Dia. Sch 40 Steel Vent Pipe W/ Cap And Bracket as Manufactured By Blue Dot Steel Or Approved Equal. Wrap Pipe With Reflective Tape Then Drill 1/4"ø Holes 1" O.C. In Top 12" Of Pipe. Strap Pipe To Wall. Install Vents In Unpaved Areas Only.

NOTE: Meter Vaults To Be Pre-Cast Concrete Unless Otherwise Approved By Water Operations. See MAG Std Detail 321 For Vault Construction.

VAULT DIMENSION TABLE			
MAIN SIZE	3"	4"	6"
(A)	8'–4"	10'–6"	12'–0"
(B)	4'–6"	5'–0"	5'–0"

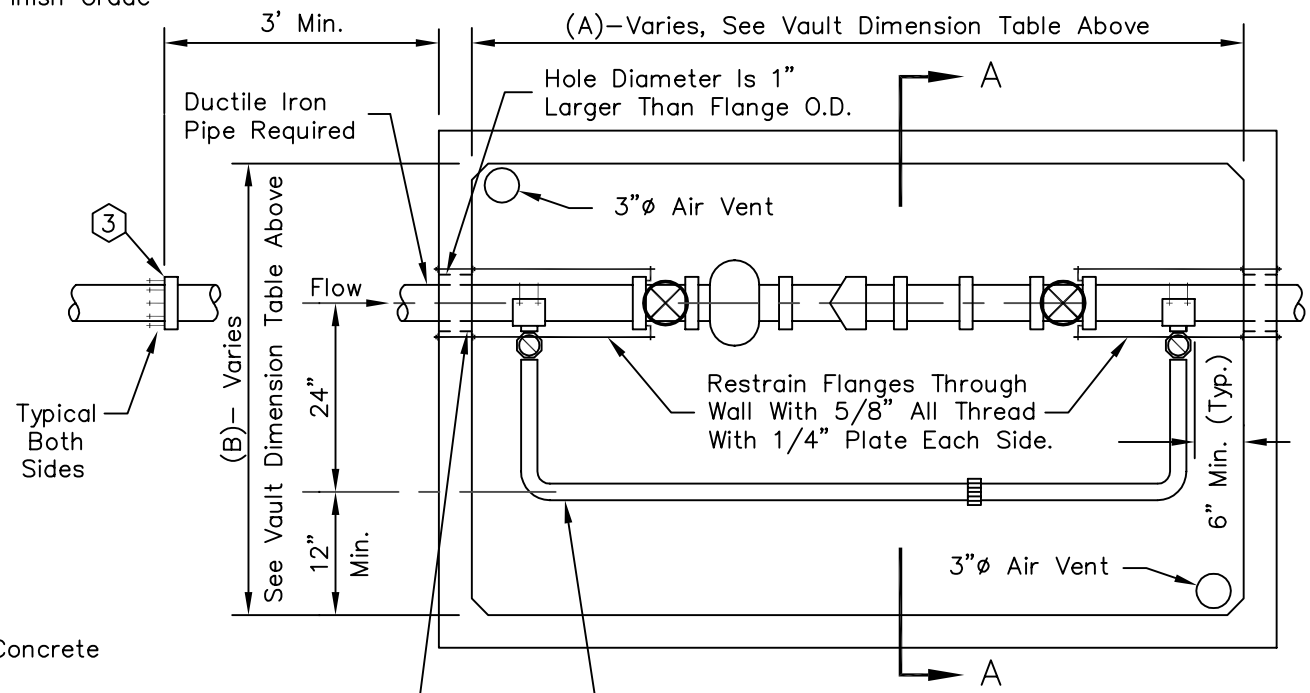

Insulate Water Main From Concrete Box With 1" Ramneck Or Other Expansion Material Approved By The Engineer. Grout Balance Of Opening Per MAG Specifications.

Except For 2" Copper Bypass All Fittings Will Be Flanged. Uniflange Not Acceptable Unless Approved By Water Operations. 2" Copper Bypass Will Be Joined With Silver Solder Except At 2" Corp Stop Which Will Be Pac Joint.

PLAN

VAULT INSTALLATION

SHEET 1 OF 2

DETAIL NO. 2345-1

City of Scottsdale Standard Details

3", 4", 6" WATER METER

DETAIL NO. 2345-1

REVISED 2/27/01

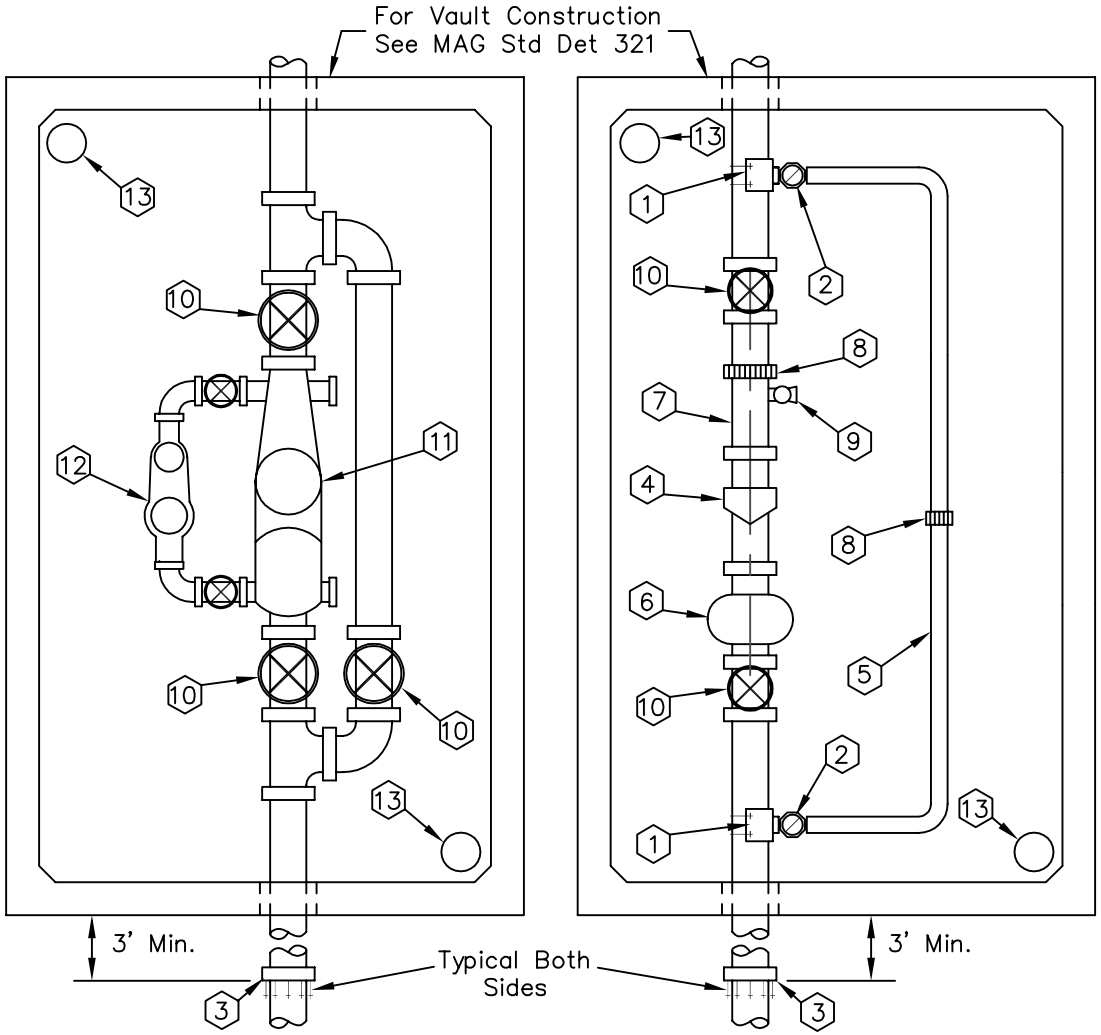

COMBINATION DOMESTIC/ FIRE LINE METER

COMPOUND/TURBINE METER

KEY NOTES

1. Double Strap All Bronze Service Saddle, Or Flanged x Flanged Tee With Flanged X Flanged Valve For Sizes 3" Or Larger.
2. Corp. Stop, 2"(Ball Type), Or R.W. Gate Valve With Non-Rising Stem Handwheel Operator For 3" Or Larger.
3. Adaptor, Flanged To Mech. Joint For A.C.P.
4. Turbine (High Flow) Or Compound Meter, See Note 4 Below.
5. 2" Ridged Type "K" Copper By-Pass Line, 3" Or Larger To Be Ductile Iron. Not Less Than One Pipe Size Smaller Than Meter In Note 4.
6. Strainer, Supplied with Meter.
7. Flanged Spool, (3 Pipe Diameters In Length, Min.).
8. Provide Victaulic Coupling Or Approved Equal For All Lines 3" Or Larger.
9. 2" Threaded Outlet And Ball Valve. Not Needed If Vertical Test Valve Is Provided On Meter.
10. Resilient Wedge Gate Valve, Flanged, With Hand Wheel, Open Left, With Non-Rising Stem.
11. Turbine (High Flow) Or Compound Meter, See Note 4 Below.
12. 2" Turbine Meter: Sensus "W-160" Or Hersey "MHR" Or Neptune Trident Turbine.
13. 3"ø Air Vent, See Sheet 1 Of 2.

NOTES

1. For Larger Meters Special Vault Design Is Required.
2. Use Of Remote Reading Device At Option Of Utility.
3. An Approved Backflow Prevention Assembly Shall Be Required Downstream Of The Water Meter. Contact Water Resources, Backflow Prevention For Specific Information.
4. Meter To Be Provided By City Upon Payment Of Fees.

SHEET 2 OF 2

DETAIL NO.			DETAIL NO.
2345-2	City of Scottsdale Standard Details	3, 4", 6" WATER METER	2345-2

REVISED 2/27/01

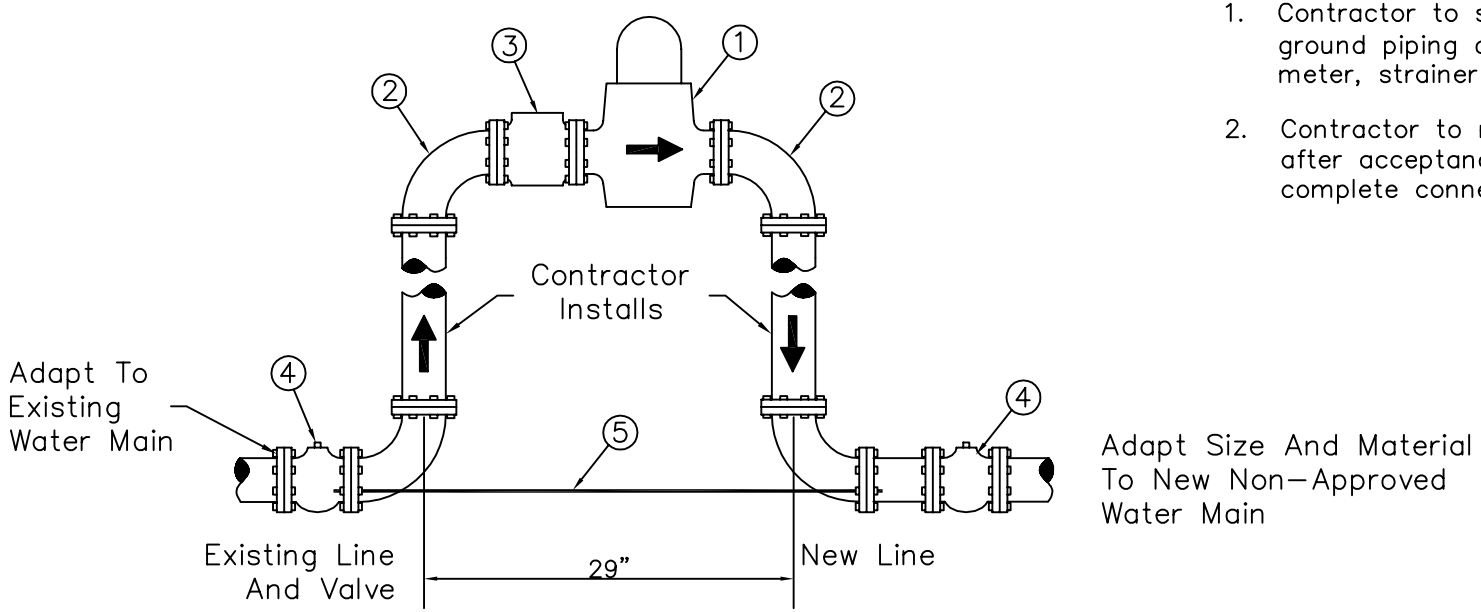

GENERAL NOTES

1. Contractor to supply and install above ground piping and fittings to accomodate meter, strainer and 2 – 90° ells.
2. Contractor to remove piping and fittings after acceptance of new water main and complete connection as per MAG Standards.

LIST OF MATERIALS

① 3", 4" & 6" Pressure regulating valve with meter and check feature – supplied by COS.
② 3", 4" & 6" Flanged ductile iron 90° ell – supplied by COS.
③ 3", 4" & 6" Strainer – supplied by COS.
④ Line valves shall be within a 20' maximum distance upstream and downstream of flow meter or as approved by COS, and shall remain in-place after removal of temporary meter.
⑤ 3/4"ø zinc coated threaded rod.

DETAIL NO. 2346	City of Scottsdale Standard Details	TEMPORARY CONSTRUCTION METER	DETAIL NO. 2346

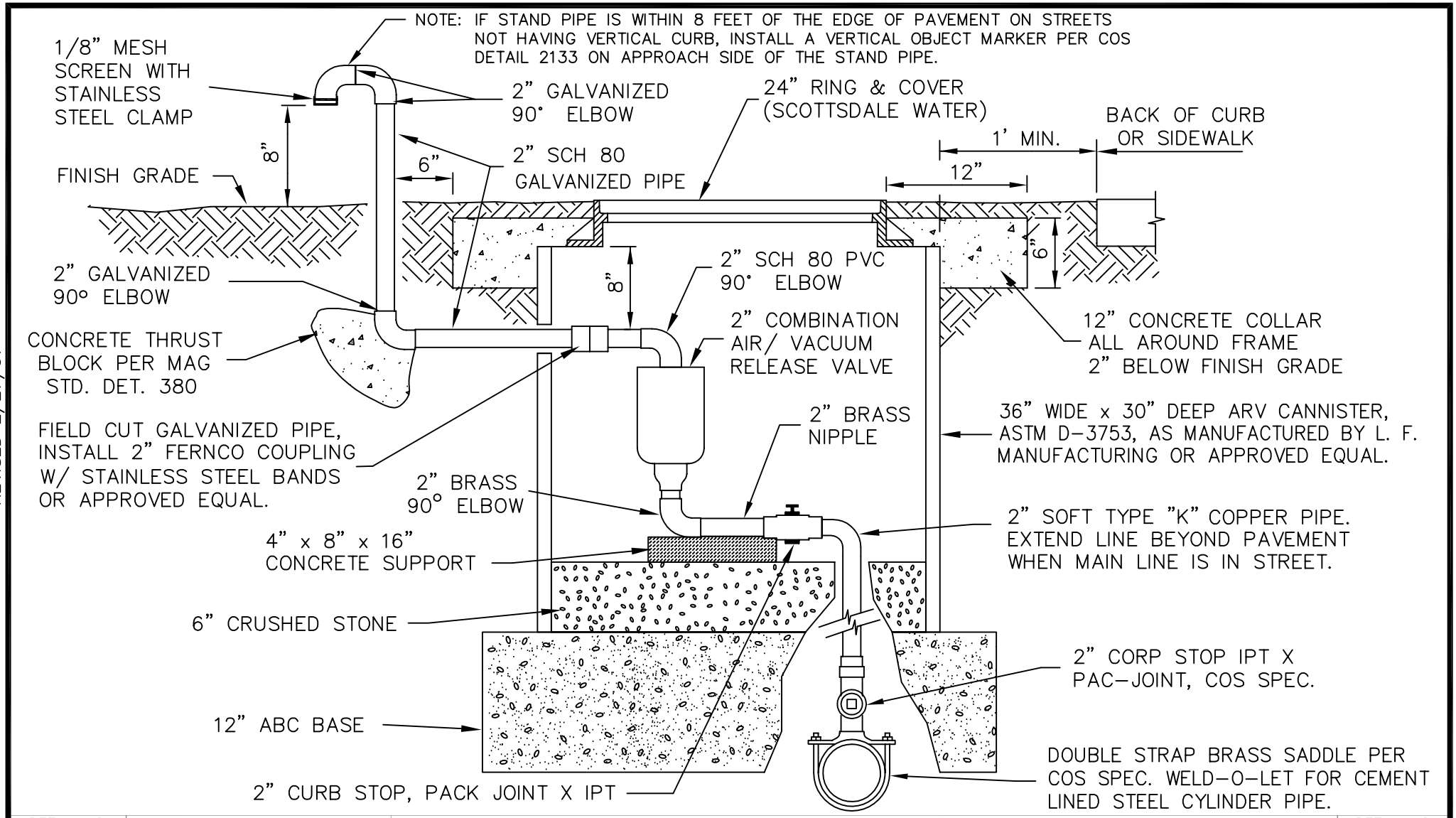

REVISED 2/27/01

DETAIL NO. 2348	City of Scottsdale Standard Details	2" AIR/VACUUM RELEASE VALVE	DETAIL NO. 2348

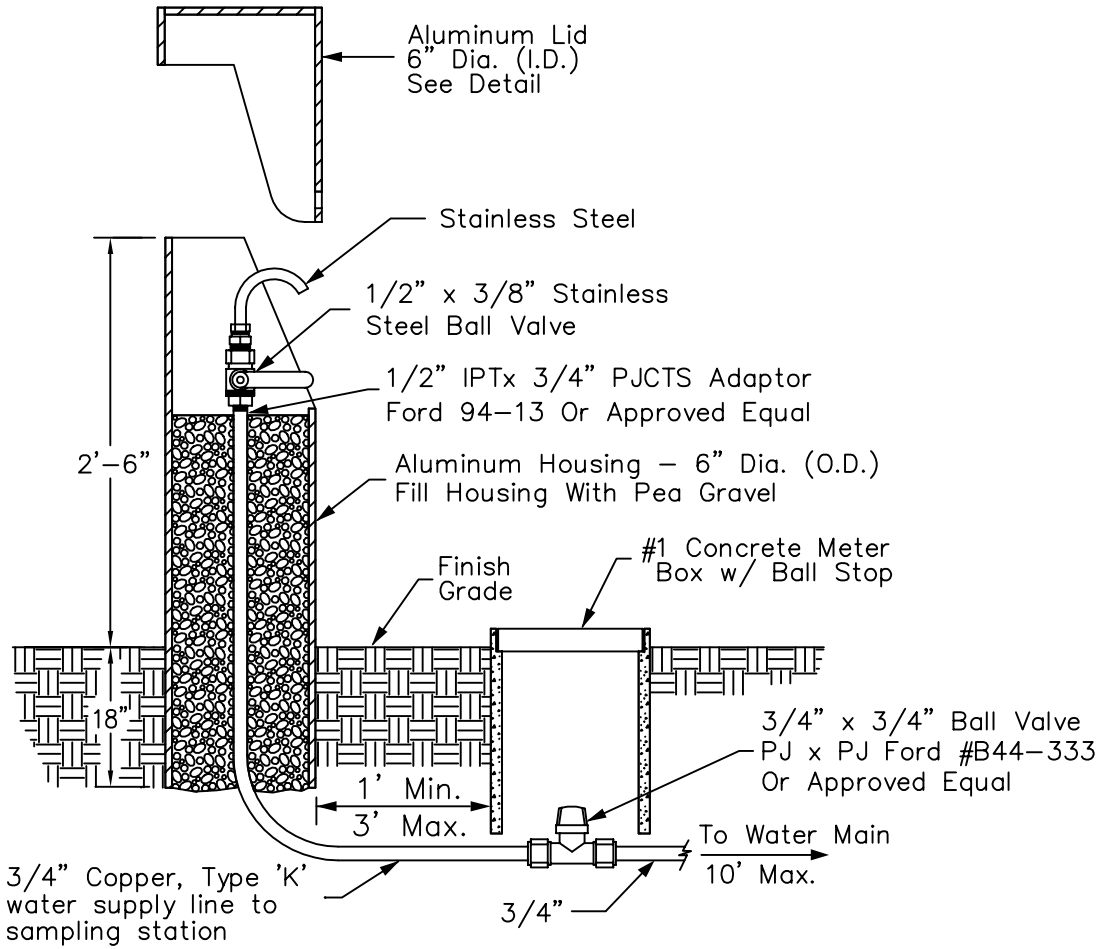

TYPICAL INSTALLATION

N.T.S.

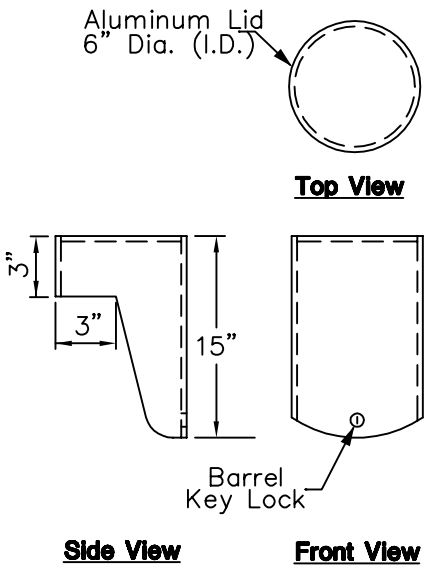

LID DETAILS

N.T.S.

NOTES:

1. Water Quality Sampling Station to be Koralean or approved equal.
2. Keys to locks shall be delivered to City of Scottsdale Water Quality Department upon acceptance.

DETAIL NO.	City of Scottsdale Standard Details	APPROVED BY:	WATER QUALITY SAMPLING STATION	DETAIL NO.
2349				2349

REVISED 3/15/99

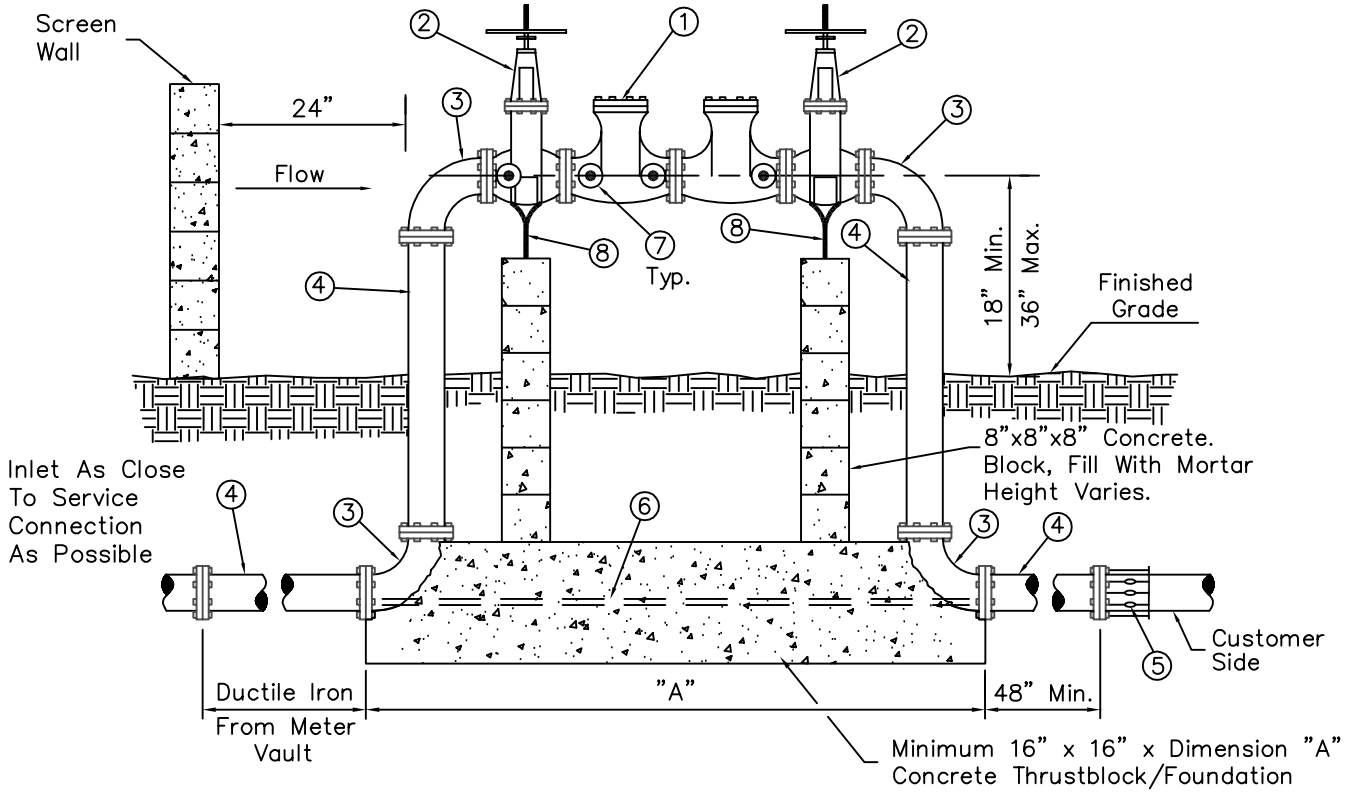

GENERAL NOTES

1. Contact the City Of Scottsdale Water And Wastewater Operations, Backflow Prevention, 312-5668, for latest list of approved backflow prevention assemblies or certified testers.
2. Backflow preventers must be tested by a certified tester before final approval is issued.
3. Backflow preventers shall be painted light tan or a color to match the building. Do not paint the name plate or any brass parts on the assembly.
4. For backflow preventers requiring guard posts see Detail 2356. Backflow preventers enclosed by screening shall maintain a 24 inch clearance around the assembly.
5. Finished grade underneath the backflow preventer shall be at 95% compaction.
6. Backflow preventers on fire lines may require tamper switches on the shut off valves. Contact City Of Scottsdale Plan Review, Fire Dept.
7. Call for underground inspection before backfilling trench.
8. Vertical installations of assemblies on fire sprinkler systems are allowed using assemblies approved for use in the vertical position on fire systems.

LIST OF MATERIALS

① Approved double check valve backflow prevention assembly.
② Resilient seated gate valve.
O.S. & Y. (fire line connection)
N.R.S. (non fire line)
③ 90° ell. Flanged D.I.P. 3" thru 10", Mega Lug or approved equal may be used on underground joints.
④ Pipe spool. Flanged D.I.P. 3" thru 10", Mega Lug or approved equal may be used on underground joints.
⑤ Flanged adapter (when required)
⑥ 3/4" zinc coated threaded rod, (5/8" rod on 3" to 4" sizes), bolt to flanges as shown, typical both sides.
⑦ Test cocks with brass plugs or adaptors with caps installed. (4 required)
⑧ Adjustable metal pipe supports and concrete block supports with 1" adjusting rod and nut on assemblies 4" and larger. Install above grade.

DETAIL NO.	City of Scottsdale Standard Details	APPROVED BY:	DOUBLE CHECK VALVE BACKFLOW PREVENTION ASSEMBLY FOR ASSEMBLIES 3 INCHES THRU 10 INCHES	DETAIL NO.
2351				2351

REVISED 3/15/99

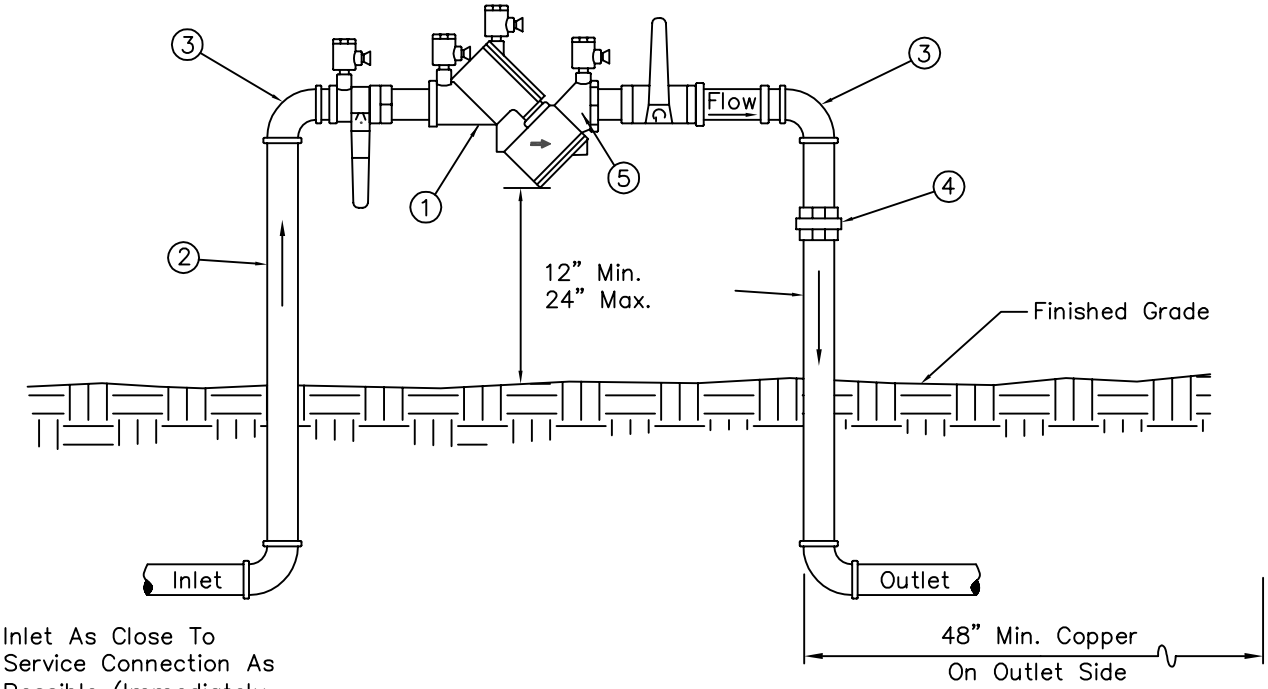

Inlet As Close To Service Connection As Possible (Immediately After Water Meter). Copper On Inlet Side.

GENERAL NOTES

1. Contact the City Of Scottsdale Water And Wastewater Operations, Backflow Prevention, 312–5668, for latest list of approved back–flow prevention assemblies or certified testers.
2. Backflow preventers must be tested by a certified tester before final approval is issued.
3. Copper fittings shall be connected with lead free solder joints.
4. Finished grade underneath the backflow pre–venter shall be at 95% compaction.
5. All nipples to be copper or brass.
6. Piping under the City right of way must be type "K" copper.
7. Call for underground inspection before backfilling trench.
8. Vertical installations of assemblies on fire sprinkler systems are allowed using assemblies approved for use in the vertical position on fire systems.

LIST OF MATERIALS

1. Approved double check valve backflow prevention assembly, ball valves included.
2. Pipe spool, type "L" hard copper, 3/4" thru 2 1/2".
3. 90° ell, copper, 3/4" thru 2 1/2".
4. Pipe union, brass or copper.
5. Test cocks with brass plugs or adaptors with caps installed. (4 required)

DETAIL NO.	City of Scottsdale Standard Details	APPROVED BY:	DOUBLE CHECK VALVE BACKFLOW PREVENTION ASSEMBLY FOR ASSEMBLIES 3/4 INCH THRU 2 1/2 INCHES	DETAIL NO.
2352				2352

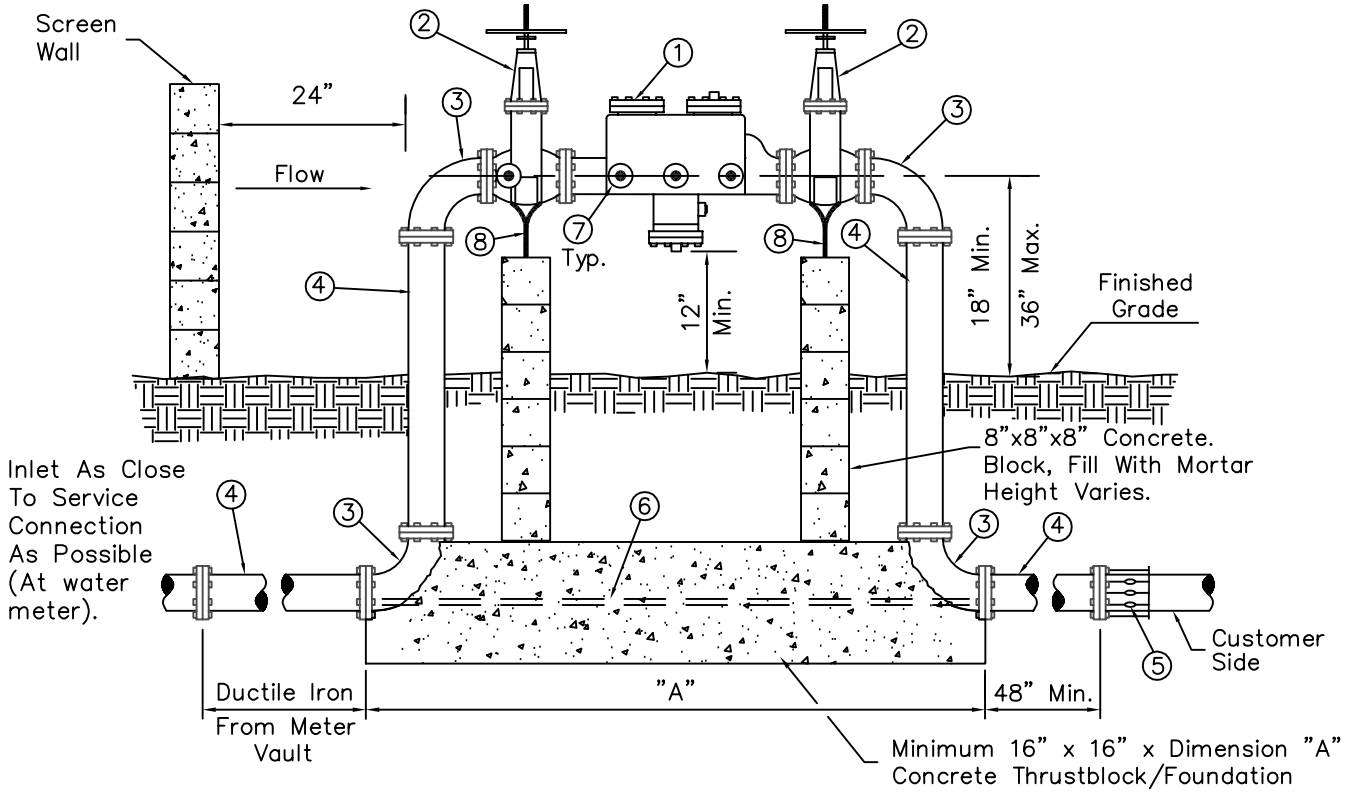

REVISED 3/15/99

GENERAL NOTES

1. Contact the City Of Scottsdale Water And Wastewater Operations, Backflow Prevention, 312–5668, for latest list of approved back–flow prevention assemblies or certified testers.
2. Backflow preventers must be tested by a certified tester before final approval is issued.
3. Backflow preventers shall be painted light tan or a color to match the building. Do not paint the name plate or any brass parts on the assembly.
4. For backflow preventers requiring guard posts see Detail 2356. Backflow preventers enclosed by screening shall maintain a 24 inch clear–ance around the assembly.
5. Finished grade underneath the backflow pre–venter shall be at 95% compaction.
6. Backflow preventers on fire lines may require tamper switches on the shut off valves. Con–tact City Of Scottsdale Plan Review, Fire Dept.
7. Call for underground inspection before backfilling trench.

LIST OF MATERIALS

① Approved reduced pressure principle backflow prevention assembly.

② Resilient seated gate valve. O.S. & Y. (fire line connection). N.R.S. (non fire line)

③ 90° ell. Flanged D.I.P. 3" thru 10", Mega Lug or approved equal may be used on underground joints.

④ Pipe spool. Flanged D.I.P. 3" thru 10", Mega Lug or approved equal may be used on underground joints.

⑤ Flanged adapter (when required)

⑥ 3/4" zinc coated threaded rod, (5/8" rod on 3" to 4" sizes), bolt to flanges as shown, typical both sides.

⑦ Test cocks with brass plugs or adaptors with caps installed. (4 required)

⑧ Adjustable metal pipe supports and concrete block supports with 1" adjusting rod and nut on assemblies 4" and larger. Install above grade.

DETAIL NO.	City of Scottsdale Standard Details	APPROVED BY:	REDUCED PRESSURE PRINCIPLE BACKFLOW PREVENTION ASSEMBLY FOR ASSEMBLIES 3 INCHES THRU 10 INCHES	DETAIL NO.
2353				2353

REVISED 3/15/99

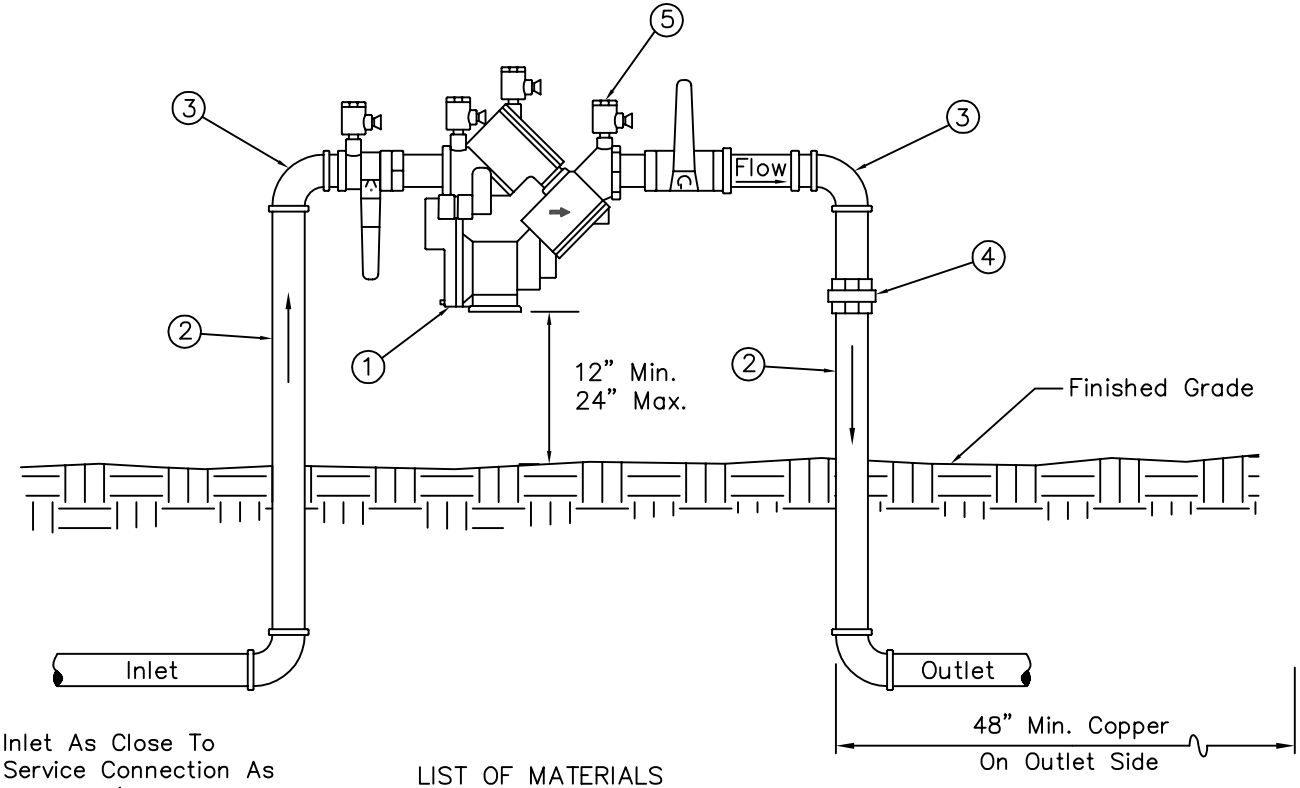

Inlet As Close To Service Connection As Possible (Immediately After Water Meter). Copper On Inlet Side.

LIST OF MATERIALS

1. Approved reduced pressure principle backflow prevention assembly, ball valves included.
2. Pipe spool, type "L" hard copper, 3/4" thru 2 1/2".
3. 90° ell, copper, 3/4" thru 2 1/2".
4. Pipe union, brass or copper.
5. Test cocks with brass plugs or adaptors with caps installed. (4 Required)

GENERAL NOTES

1. Contact the City Of Scottsdale Water And Wastewater Operations, Backflow Prevention 312–5668, for latest list of approved back–flow prevention assemblies or certified testers.
2. Backflow preventers must be tested by a certified tester before final approval is issued.
3. Copper fittings shall be connected with lead free solder joints.
4. Finished grade underneath the backflow pre–venter shall be at 95% compaction.
5. All nipples to be copper or brass.
6. Piping under the City right of way must be type "K" copper.
7. Call for underground inspection before backfilling trench.

DETAIL NO.	City of Scottsdale Standard Details	APPROVED BY:	REDUCED PRESSURE PRINCIPLE BACKFLOW PREVENTION ASSEMBLY FOR ASSEMBLIES 3/4 INCH THRU 2 1/2 INCHES	DETAIL NO.
2354				2354

REVISED 3/15/99

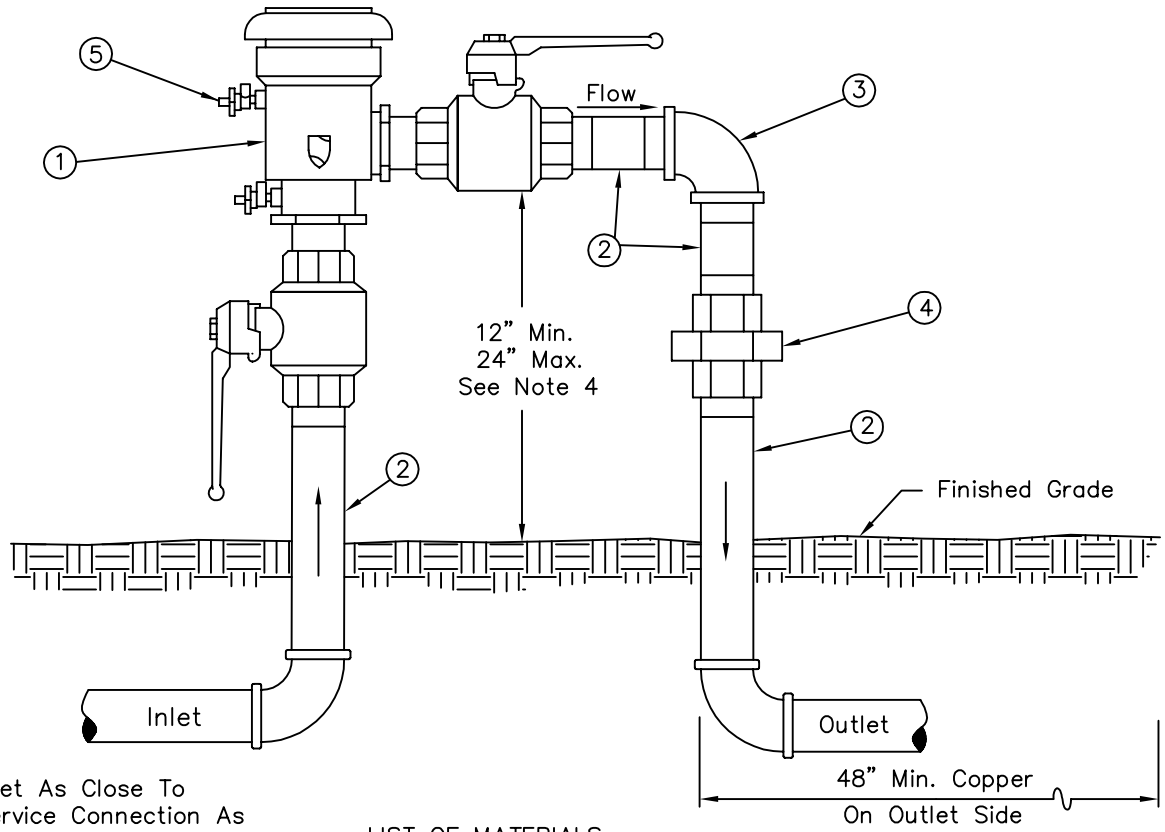

Inlet As Close To Service Connection As Possible (Immediately After Water Meter). Copper On Inlet Side.

LIST OF MATERIALS

① Approved pressure vacuum breaker assembly, ball valves included.
② Pipe spool, type "L" hard copper, 1/2" thru 2".
③ 90° ell, copper, 1/2" thru 2".
④ Pipe union, brass or copper.
⑤ Test cocks with brass plugs or adaptors with caps installed. (2 required)

GENERAL NOTES

1. Contact the City Of Scottsdale Water And Wastewater Operations, Backflow Prevention, 312–5668, for latest list of approved back–flow prevention assemblies or certified testers.
2. Backflow preventers must be tested by a certified tester before final approval is issued.
3. Pressure vacuum breakers must be installed at least 12" above all downstream piping.
4. If this distance exceeds 24 inches, a reduced pressure principle backflow prevention assembly must be utilized. See Detail 2354.
5. Copper fittings shall be connected with lead free solder joints.
6. Finished grade underneath the backflow pre–venter shall be at 95% compaction.
7. All nipples to be copper or brass.
8. Piping under the City right of way must be type "K" copper.
9. Call for underground inspection before backfilling trench.

DETAIL NO.	City of Scottsdale Standard Details	APPROVED BY:	PRESSURE VACUUM BREAKER ASSEMBLY FOR ASSEMBLIES 1/2 INCH THRU 2 INCHES	DETAIL NO.
2355				2355

REVISED 2/09/99

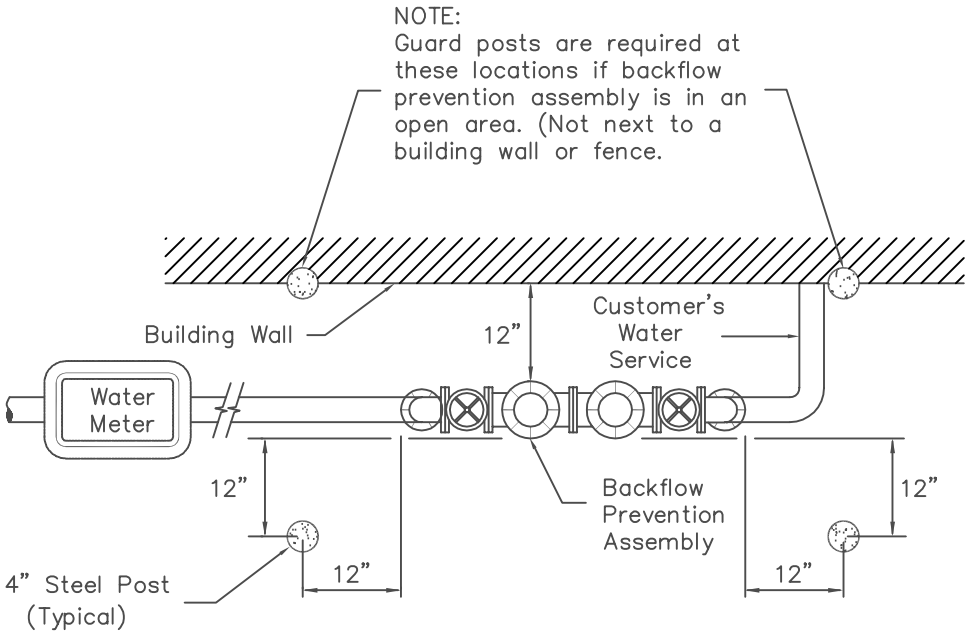

PLAN VIEW

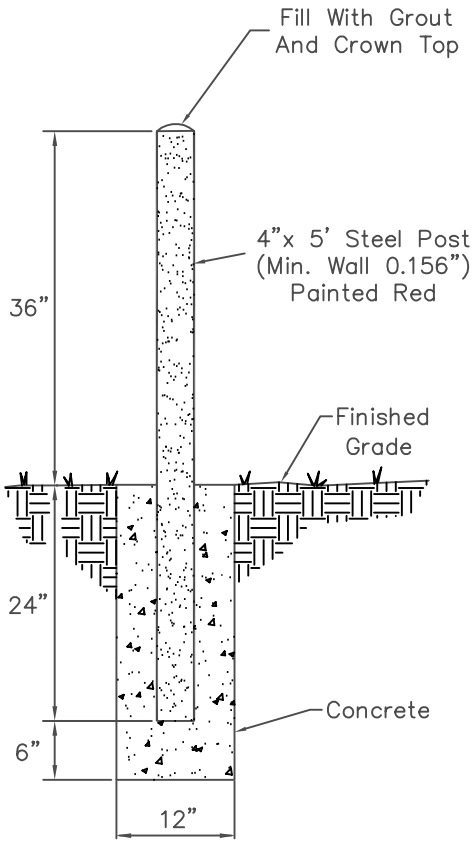

GUARD POST SECTION

DETAIL NO.	City of Scottsdale Standard Details	APPROVED BY:	GUARD POSTS FOR BACKFLOW PREVENTION ASSEMBLIES	DETAIL NO.
2356				2356

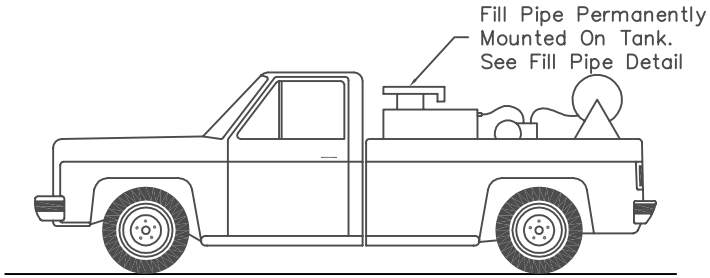

PESTICIDE APPLICATOR TRUCK

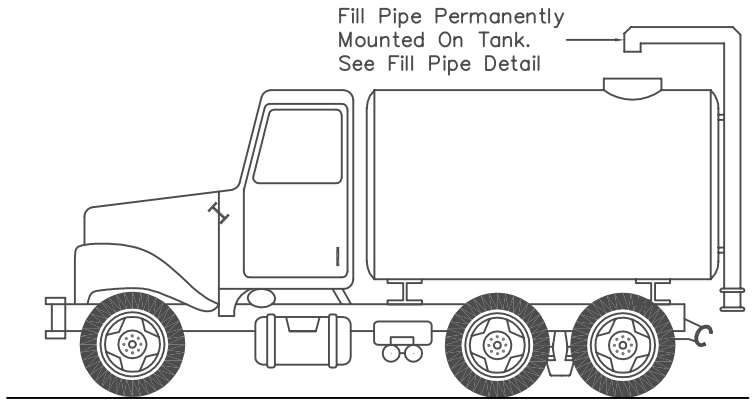

WATER TRUCK

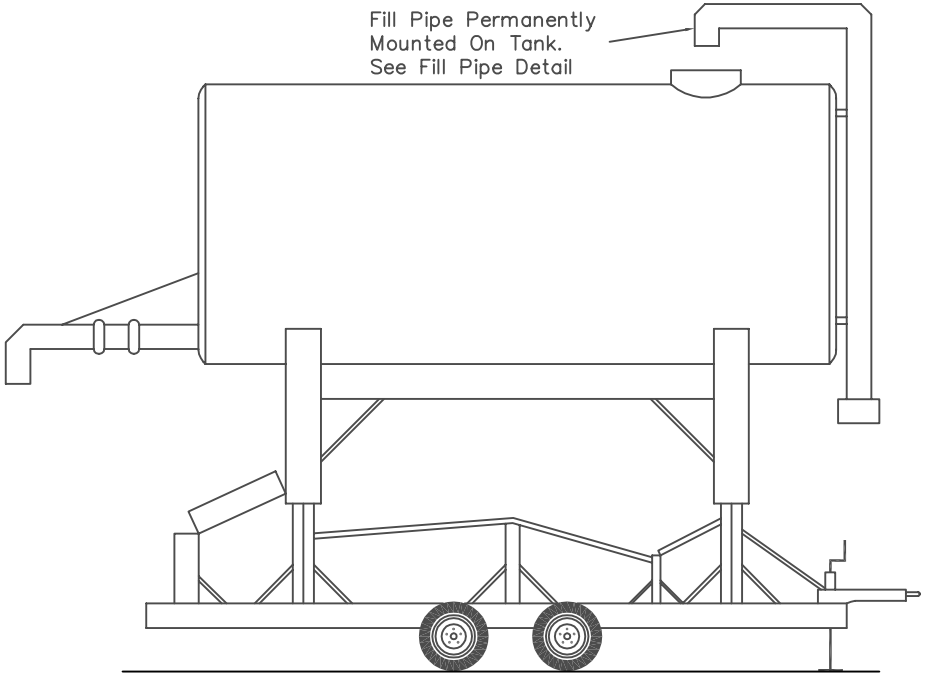

ELEVATED TANK

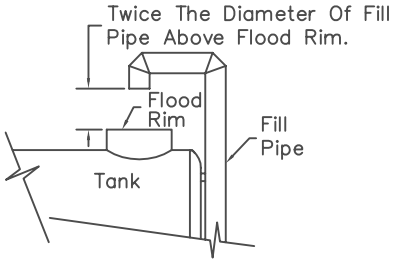

FILL PIPE DETAIL

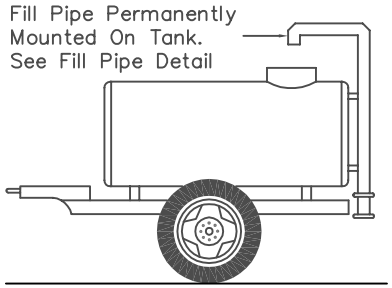

WATER WAGON

DETAIL NO.	City of Scottsdale Standard Details	APPROVED BY:	FILL PIPE DETAILS FOR PORTABLE TANKS WITH AIR GAP SEPARATION	DETAIL NO.
2357				2357

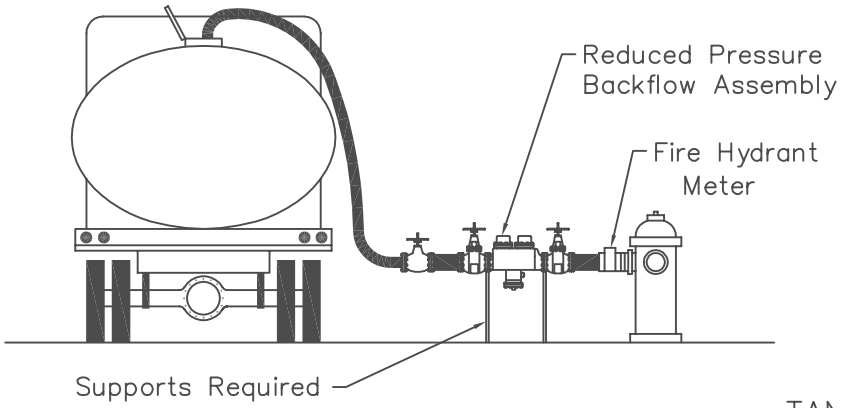

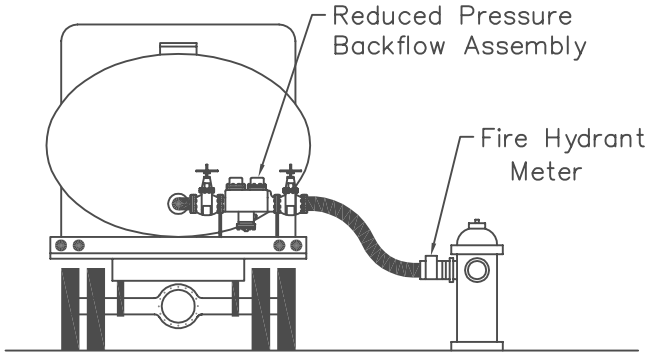

TANK TRUCKS

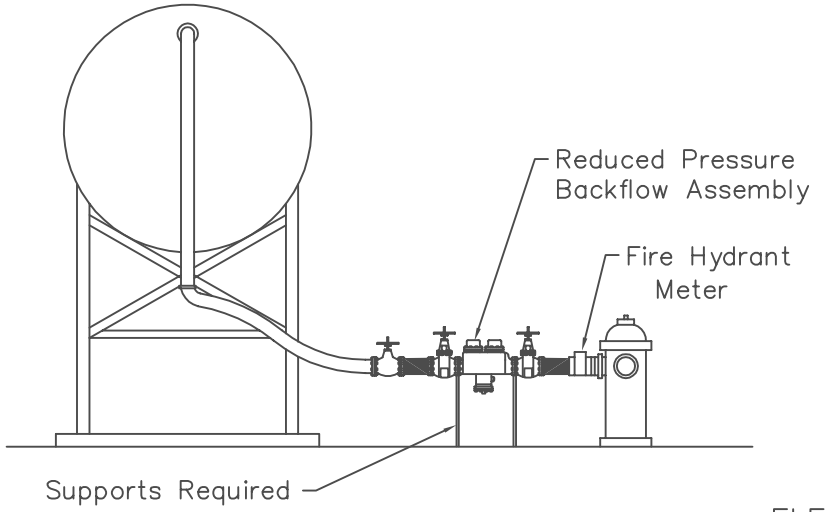

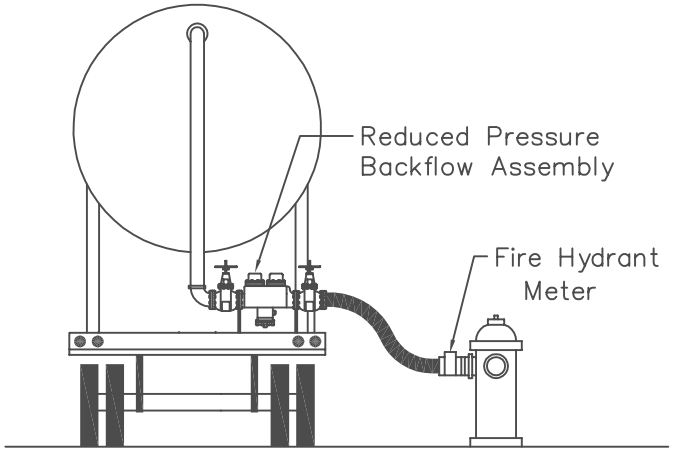

ELEVATED TANKS

DETAIL NO.	City of Scottsdale Standard Details	APPROVED BY:	BACKFLOW PREVENTION METHOD FOR PORTABLE TANKS WITH NO AIR GAP SEPARATION	DETAIL NO.
2358				2358

REVISED 3/15/99

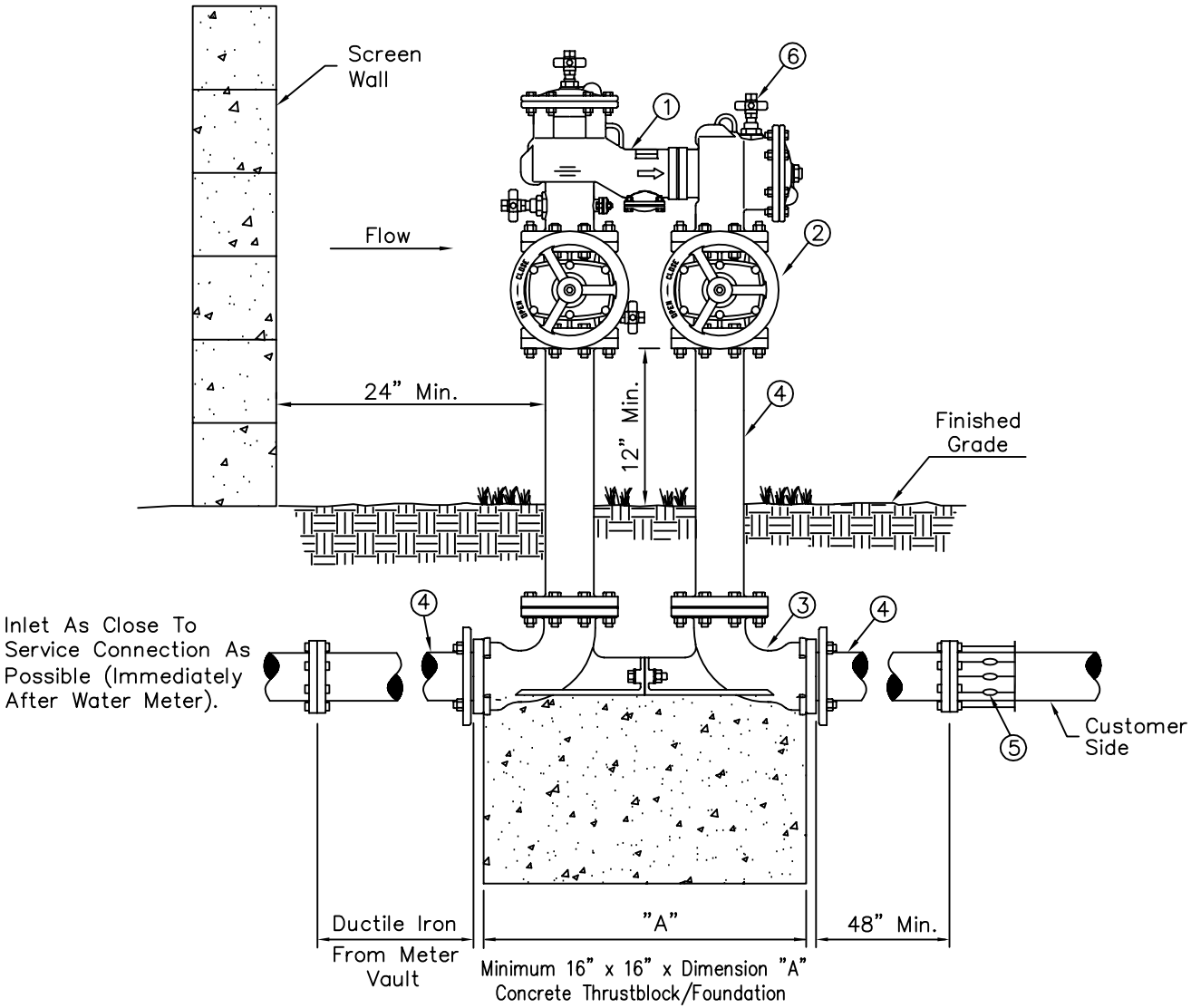

GENERAL NOTES

1. Contact the City Of Scottsdale Water And Wastewater Operations, Backflow Prevention, 312–5668, for latest list of approved back–flow prevention assemblies or certified testers.
2. Backflow preventers must be tested by a certified tester before final approval is issued.
3. Backflow preventers shall be painted light tan or a color to match the building. Do not paint the name plate or any brass parts on the assembly.
4. For backflow preventers requiring guard posts see Detail 2356. Backflow preventers enclosed by screening shall maintain a 24 inch clear–ance around the assembly.
5. Finished grade underneath the backflow pre–venter shall be at 95% compaction.
6. Backflow preventers on fire lines may require tamper switches on the shut off valves. Con–tact City Of Scottsdale Plan Review, Fire Dept.
7. Call for underground inspection before backfilling trench.

LIST OF MATERIALS

① Approved "N" shape double check valve backflow prevention assembly.

② Resilient seated gate valve.
O.S. & Y. (fire line connection)
N.R.S. (non fire line)

③ Valve setters, fusion epoxy coated ductile iron, plated nuts and bolts. (2 required)

④ Pipe spool. Flanged D.I.P. 3" thru 10", Mega Lug or approved equal may be used on underground joints.

⑤ Flanged adapter (when required)

⑥ Test cocks with brass plugs or adaptors with caps installed. (4 required)

DETAIL NO.	City of Scottsdale Standard Details	APPROVED BY:	"N" SHAPED DOUBLE CHECK VALVE BACKFLOW PREVENTION ASSEMBLY FOR ASSEMBLIES 3 INCHES THRU 10 INCHES	DETAIL NO.
2359				2359

REVISED 3/15/99

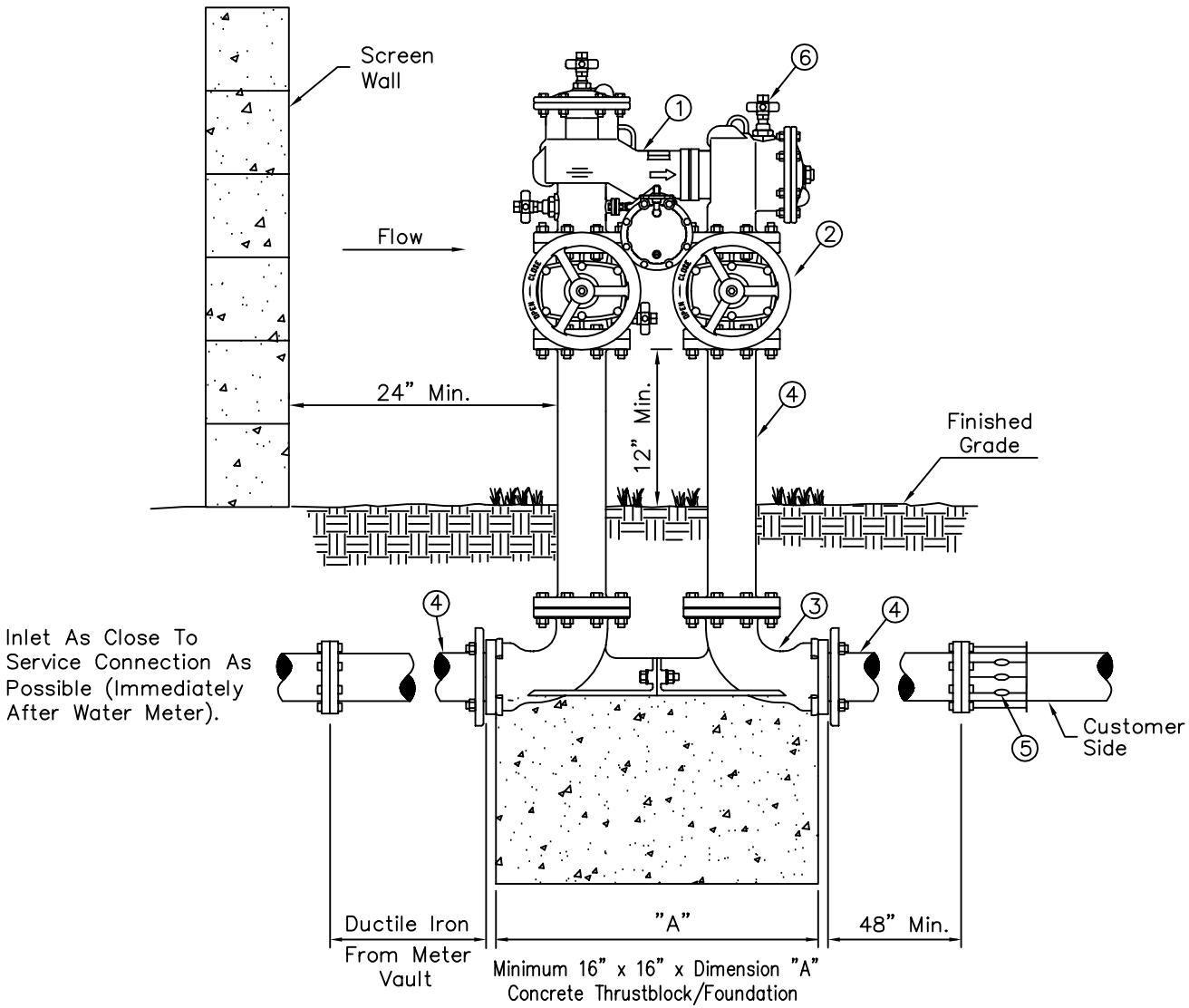

GENERAL NOTES

1. Contact the City Of Scottsdale Water And Wastewater Operations, Backflow Prevention, 312–5668, for latest list of approved back–flow prevention assemblies or certified testers.
2. Backflow preventers must be tested by a certified tester before final approval is issued.
3. Backflow preventers shall be painted light tan or a color to match the building. Do not paint the name plate or any brass parts on the assembly.
4. For backflow preventers requiring guard posts see Detail 2356. Backflow preventers enclosed by screening shall maintain a 24 inch clear–ance around the assembly.
5. Finished grade underneath the backflow pre–venter shall be at 95% compaction.
6. Backflow preventers on fire lines may require tamper switches on the shut off valves. Con–tact City Of Scottsdale Plan Review, Fire Dept.
7. Call for underground inspection before backfilling trench.

LIST OF MATERIALS

① Approved "N" shape reduced pressure principle backflow prevention assembly.

② Resilient seated gate valve.
O.S. & Y. (fire line connection)
N.R.S. (non fire line)

③ Valve setters, fusion epoxy coated ductile iron, plated nuts and bolts. (2 required)

④ Pipe spool. Flanged D.I.P. 3" thru 10", Mega Lug or approved equal may be used on underground joints.

⑤ Flanged adapter (when required)

⑥ Test cocks with brass plugs or adaptors with caps installed. (4 required)

DETAIL NO.	City of Scottsdale Standard Details	APPROVED BY:	"N" SHAPED REDUCED PRESSURE PRINCIPLE BACKFLOW PREVENTION ASSEMBLY FOR ASSEMBLIES 3 INCHES THRU 10 INCHES	DETAIL NO.
2360				2360

REVISED 7/20/95

NOTES

1. All joints in hydrant run–out to be restrained joints.
2. See MAG Std. Detail 391–C for valve box installation.
3. For water valve blocking see MAG Std. Detail 301.
4. For additional information see MAG Std. Detail 360.

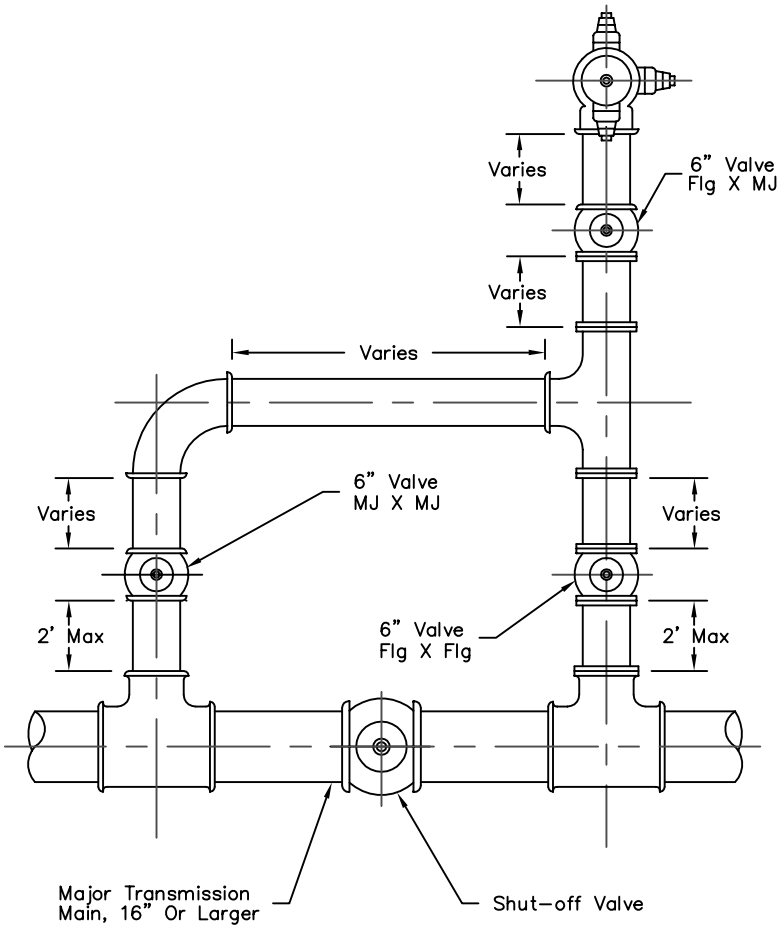

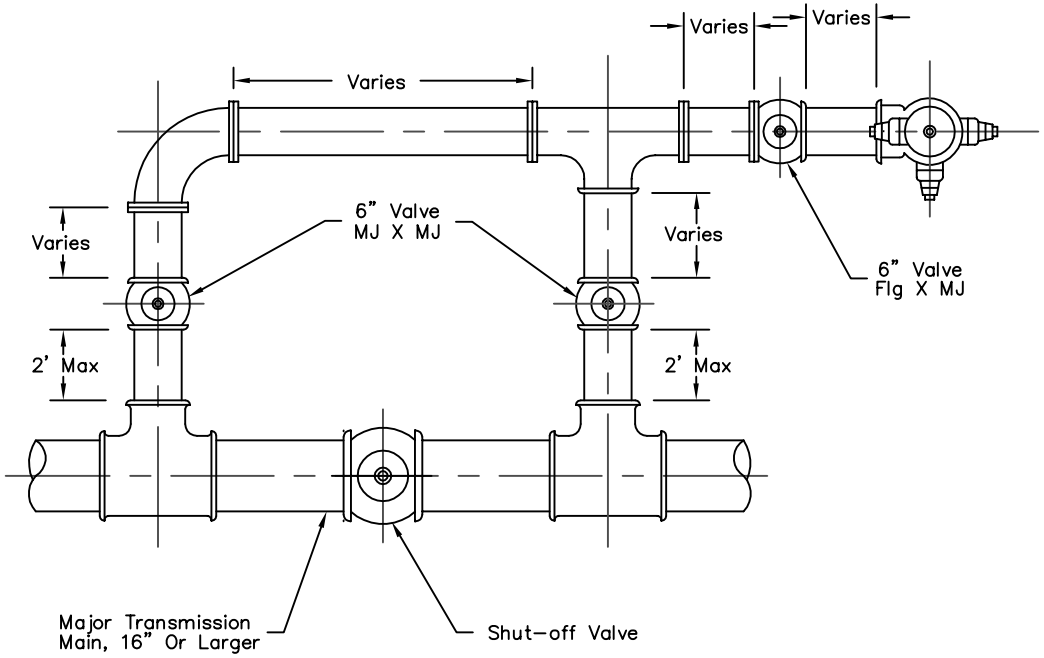

DETAIL NO.		APPROVED BY:		DETAIL NO.
2361	City of Scottsdale Standard Details		FIRE HYDRANT BYPASS ASSEMBLY	2361

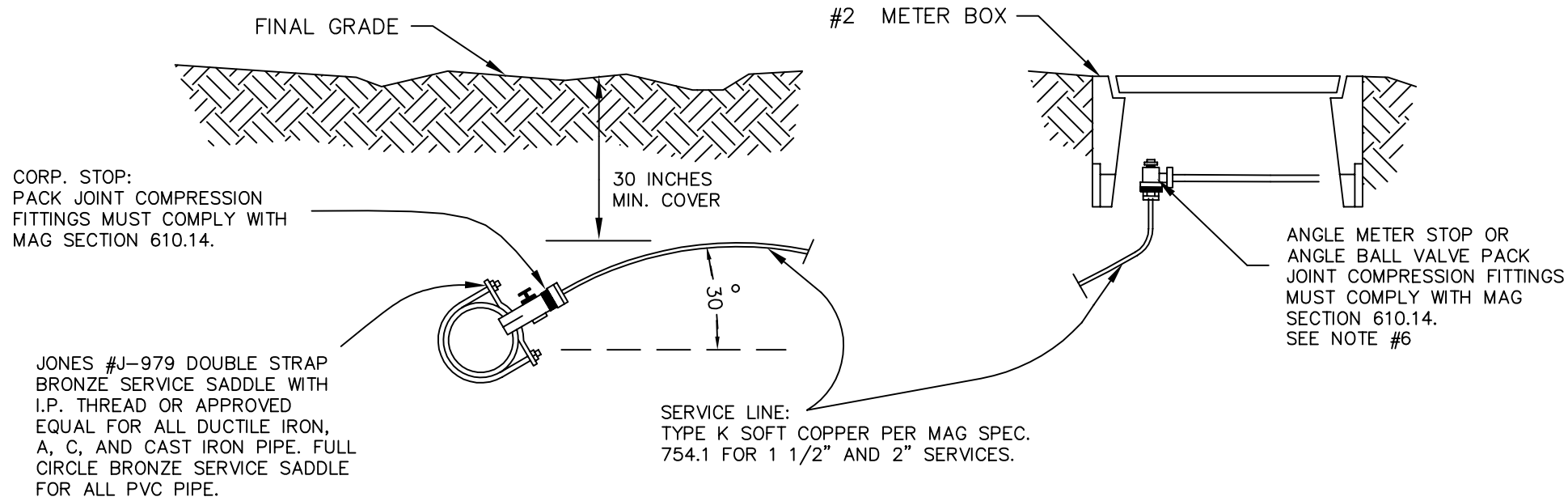

REVISED 4/7/00

NOTE:
1. All taps must be made using a service saddle.
2. All service line sizes shall have the pack joint compression fittings for corp. stops and meter stops.
3. Where a contractor is installing new water lines, he shall also install the water service connection. The installation shall include the service saddle, corp. stop, service pipe, appurtenant fittings, meter stop, concrete meter box and box cover, per M.A.G. Specifications.
4. Copper service lines in the 1 1/2", and 2" sizes that cross streets will be one continuous piece. Only with the express written consent of Water & Wastewater Operations will joints be permitted under a road. When this occurs, pack joint fittings will be required; no soldered joints will be permitted.
5. When all or part of a development is to be served by existing City of Scottsdale water mains, only authorized City of Scottsdale Water and Wastewater Operations personnel shall install the fire service connection.
6. Fire Department Identification Tag is required. Water resistant tag shall be affixed to valve in meter box and shall state: "DO NOT CLOSE! Fire Sprinkler Supply Line".

DETAIL NO.	City of Scottsdale Standard Details	1 1/2" - 2" FIRE LINE CONNECTION	DETAIL NO.
2362			2362

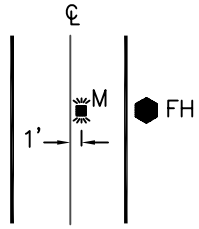

Midblock Local

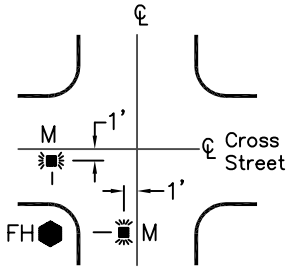

Local Cross Intersection

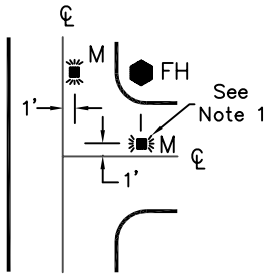

Local 'T' Intersection

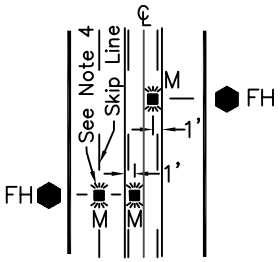

Midblock
WITH CENTER LANE OR SKIP LINES

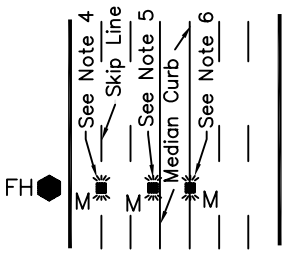

Midblock
WITH RAISED MEDIAN

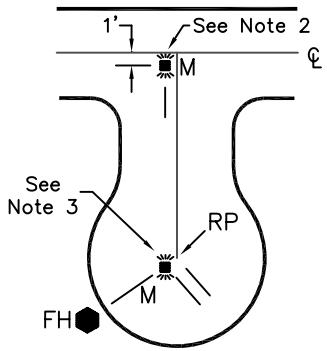

Cul-De-Sac Street

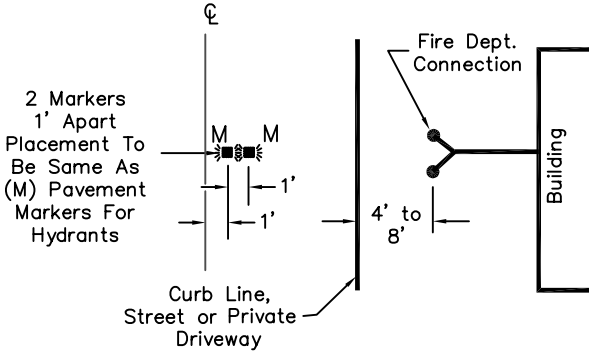

Fire Dept. Connection

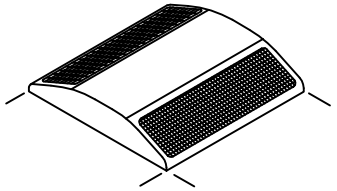

(M) Pavement Marker
(2-WAY REFLECTIVE BLUE)

NOTES:

1. Not Required on Dead End Streets Without Hydrants
2. Place on Hydrant Side of Centerline.
3. Not Required When Cul-De-Sac is Less Than 250'.
4. To Be Placed in Line With Skip Line.
5. Place on Gutter or Adjacent To Curb.
6. Place on Top of Curb. (This Location Optional)
7. Pavement Markers Shall Not Be Placed Within One Foot of A Paint Line (Center to Center).

REVISED 6/15/91

DETAIL NO.	City of Scottsdale Standard Details	APPROVED BY:	PAVEMENT MARKERS FOR FIRE HYDRANTS	DETAIL NO.
2363				2363

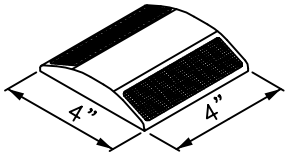

Type M Pavement Marker
(2-WAY REFLECTIVE BLUE)

DETAIL "A"

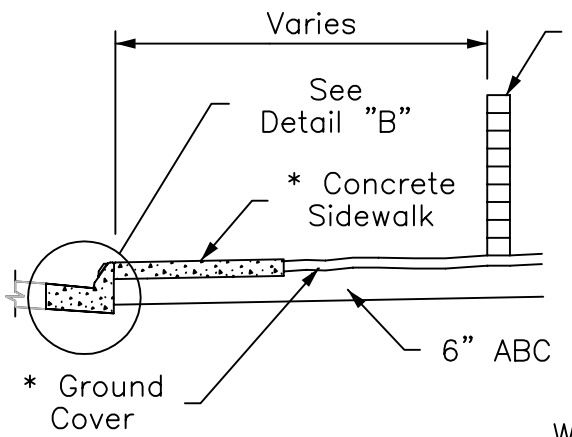

SIDE VIEW

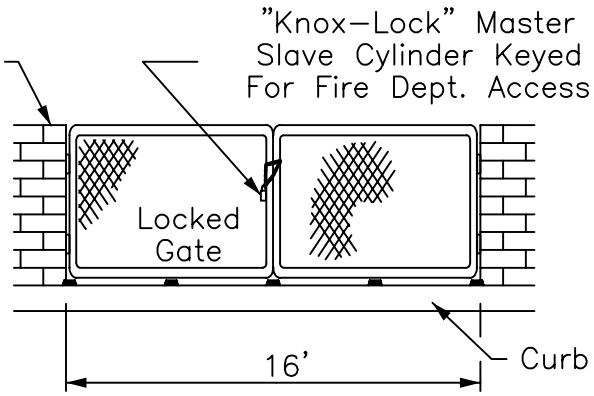

FRONT VIEW

* NOTE:
Sidewalk And/Or 2" Max. Ground Cover Over Min. 6" ABC

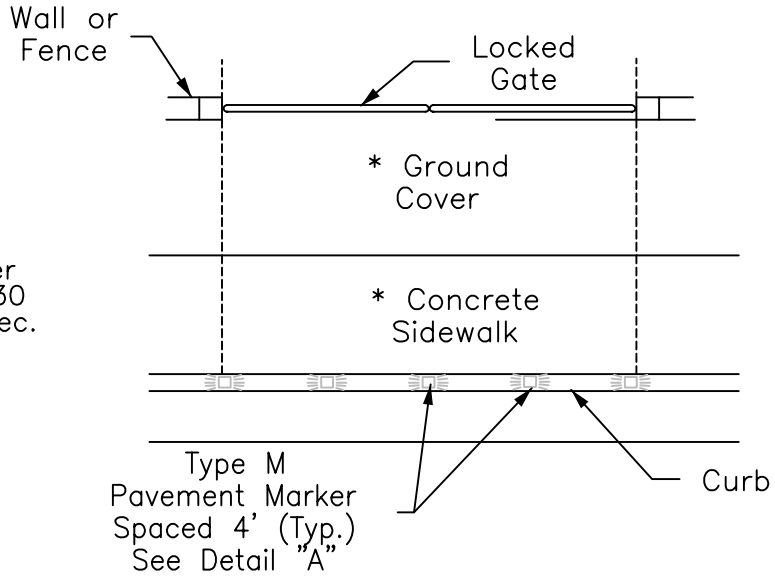

TOP VIEW

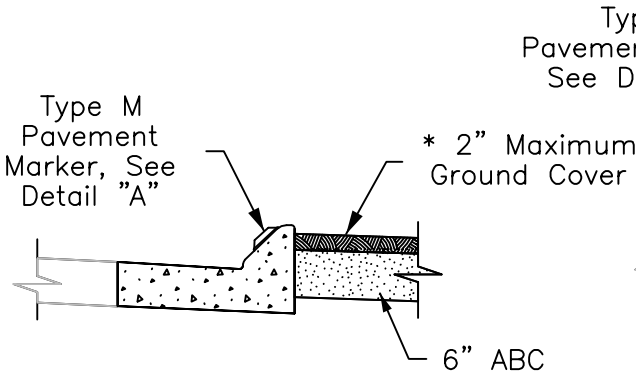

TYPE "M" MOUNTABLE CURB AND GUTTER

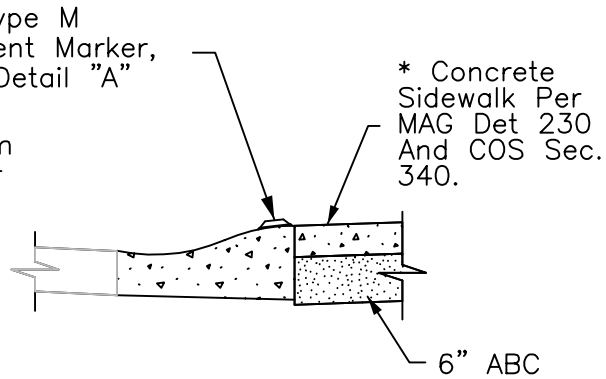

ROLL CURB

DETAIL "B"

REVISED 3/17/99

DETAIL NO.	City of Scottsdale Standard Details	APPROVED BY:	FIRE AND EMERGENCY ACCESS AND DELINEATION	DETAIL NO.
2364				2364

NOTES:

1. At the beginning and end of the fire lane, the sign shall have a single headed arrow pointing in the direction the regulation is in effect. The intermediate signs shall have double headed arrows pointing in both directions.

2. The maximum spacing of the signs shall be 100’, contingent upon Traffic Engineering’s review and approval.

3. The signs shall be set at an angle of not less than 30° nor more than 45° with the curb or line of traffic flow

4. The clearance to the bottom of the sign shall be 7 feet. There shall be no other signs attached to the sign or the sign pole.

5. The sign plate shall be a minimum of 12’’ x 18’’ with a thickness of 0.80”.

6. The sign face shall have a white, ASTM Type II (super engineering grade) reflective background with a red reflective legend. Use the standard sign face number R7–32 or equivalent incorporating additional information to complete the sign as shown above.

REVISED 2/26/01

DETAIL NO. 2365 | City of Scottsdale Standard Details

FIRE LANE SIGN

DETAIL NO. 2365

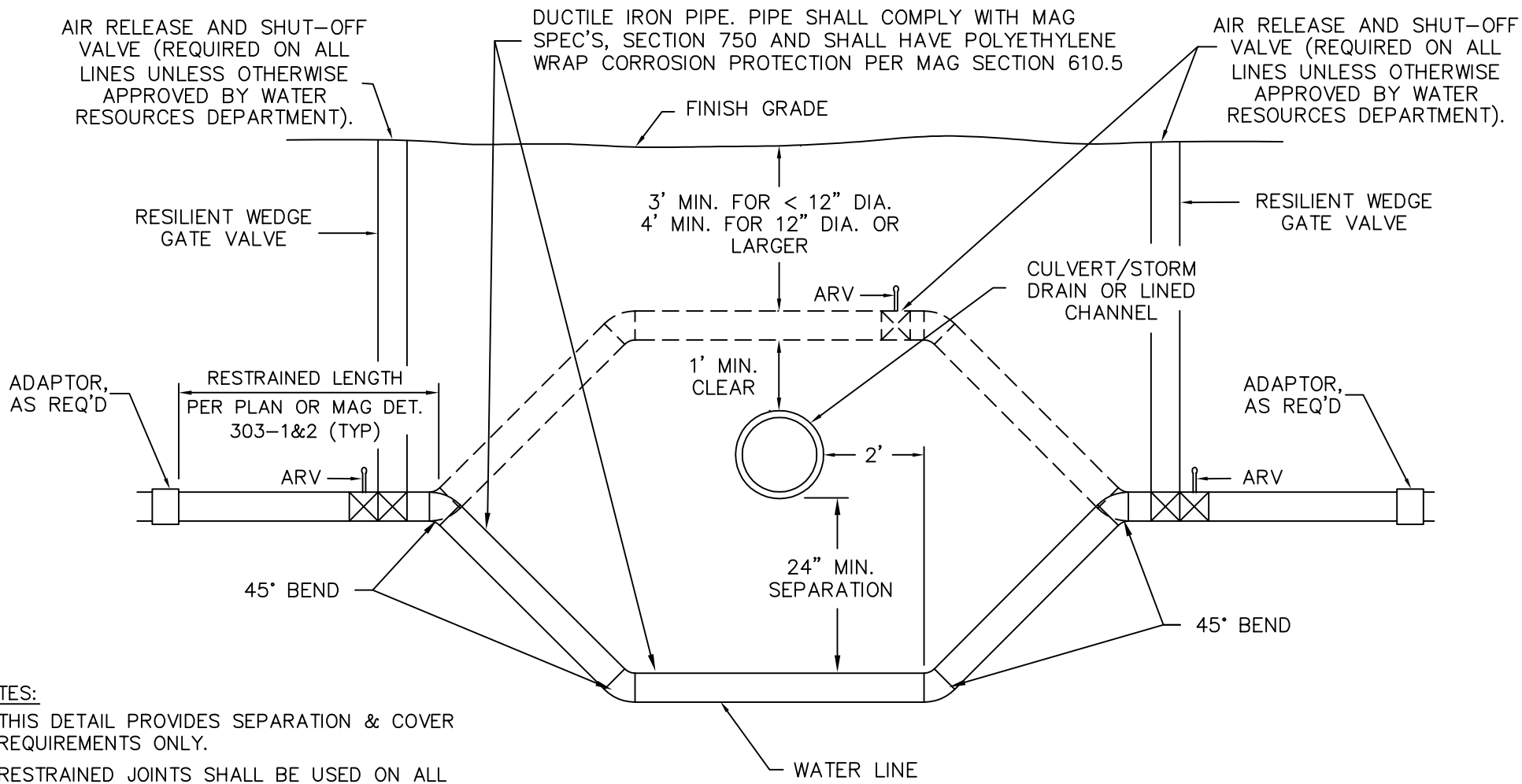

NOTES:

1. THIS DETAIL PROVIDES SEPARATION & COVER REQUIREMENTS ONLY.
2. RESTRAINED JOINTS SHALL BE USED ON ALL BENDS AND FOR THE APPROPRIATE RESTRAINT LENGTH OF PIPE PER THE MANUFACTURERS SPECIFICATION.

REVISED 2/27/02

DETAIL NO.	City of Scottsdale Standard Details	VERTICAL REALIGNMENT OF WATER MAINS	DETAIL NO.
2370			2370

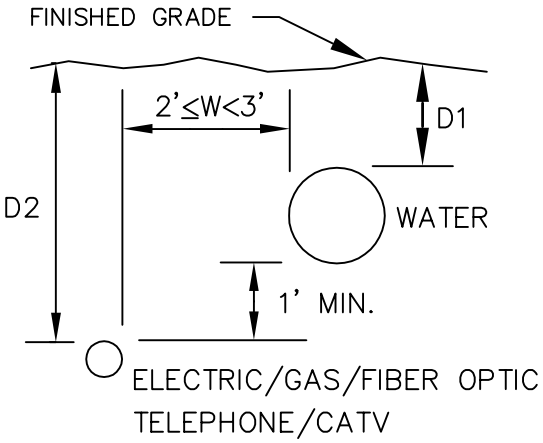

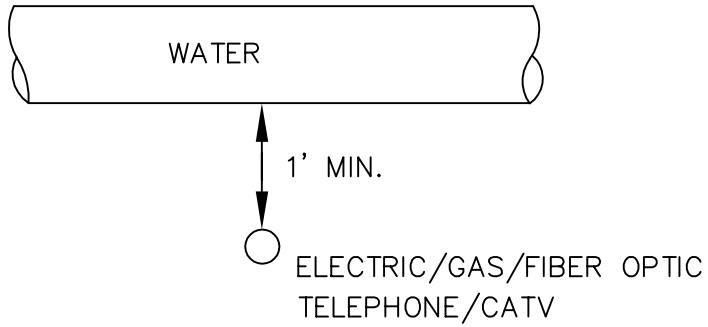

CROSSING

LEGEND

D1 = 3' Min. for pipe < 12" dia
D1 = 4' Min. for pipe ≥ 12" dia
D2 = Minimum Cover
W = Horizontal Separation

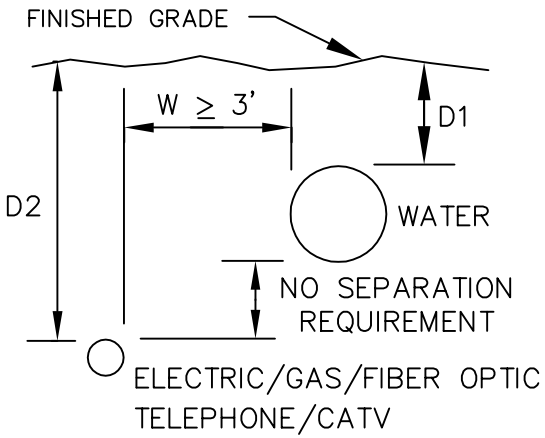

NOTES

1. Electric separation requirements are for primary electric conductors only. For service conductors see plans.

2. Primary electric, gas, telephone, cable TV or fiber optic lines shall not cross above a water line without written approval from the City's Water Resources Department. If this approval is obtained, a utility locator strip and ABC slurry conforming to COS Specifications Sec. 601.3.6 are required.

REVISED 8/29/96

DETAIL NO.	City of Scottsdale Standard Details	APPROVED BY:	MINIMUM UTILITY SEPARATION REQUIREMENTS	DETAIL NO.
2372				2372

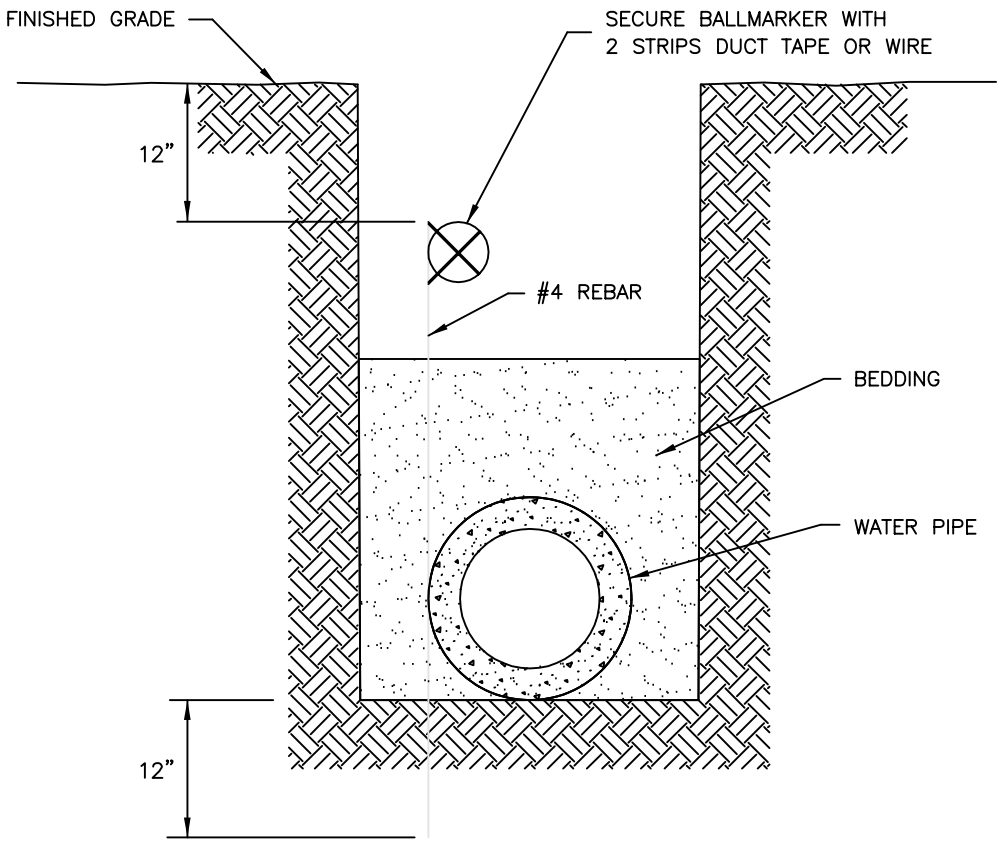

DETAIL NO. 2397

City of Scottsdale Standard Details

ELECTRONIC BALLMARKER PLACEMENT

DETAIL NO. 2397

REVISED 1/10/94

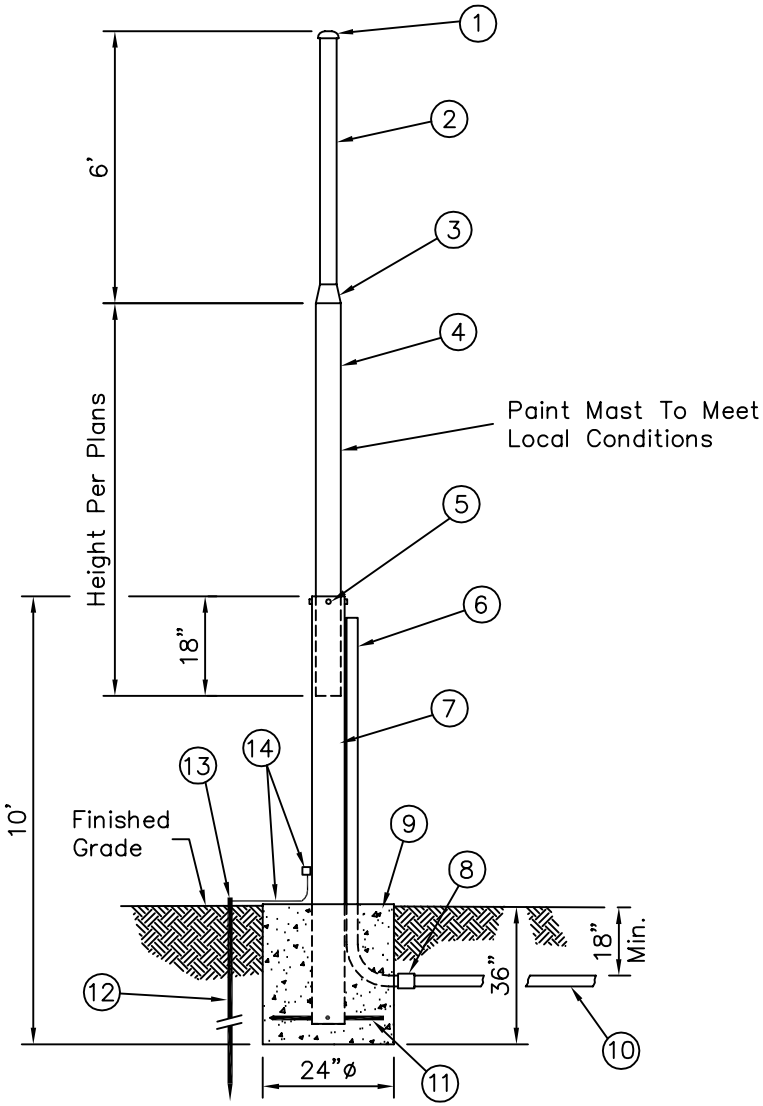

LIST OF MATERIALS

1. Raintight Cap
2. 2" Galvanized Rigid Steel Conduit
3. 2 1/2" To 2" Galvanized Steel Reducer
4. 2 1/2" Galvanized Rigid Steel Conduit
5. 1/2" Set Screw (Typ. – 4 Each)
6. 1" Rigid Steel Conduit, Strap To Mast Install Bushing On Top Of Conduit
7. 3" Galvanized Rigid Steel Conduit
8. PVC To Rigid Steel Conduit Fitting
9. Concrete Foundation, Class "B"
10. 1" PVC Conduit To Radio Transceiving Unit
11. #5 Rebar (8" Length) Welded To 3" Conduit (Typ. – 4 Each)
12. 5/8"ø x 8' Long Grounding Rod
13. Acorn Nut Connection
14. Ground Attached To 3" Conduit Using Lug And Self Tapping Screw

DETAIL NO. 2398	City of Scottsdale Standard Details	APPROVED BY:	ANTENNA MAST DETAIL	DETAIL NO. 2398