REVISED 3/15/99

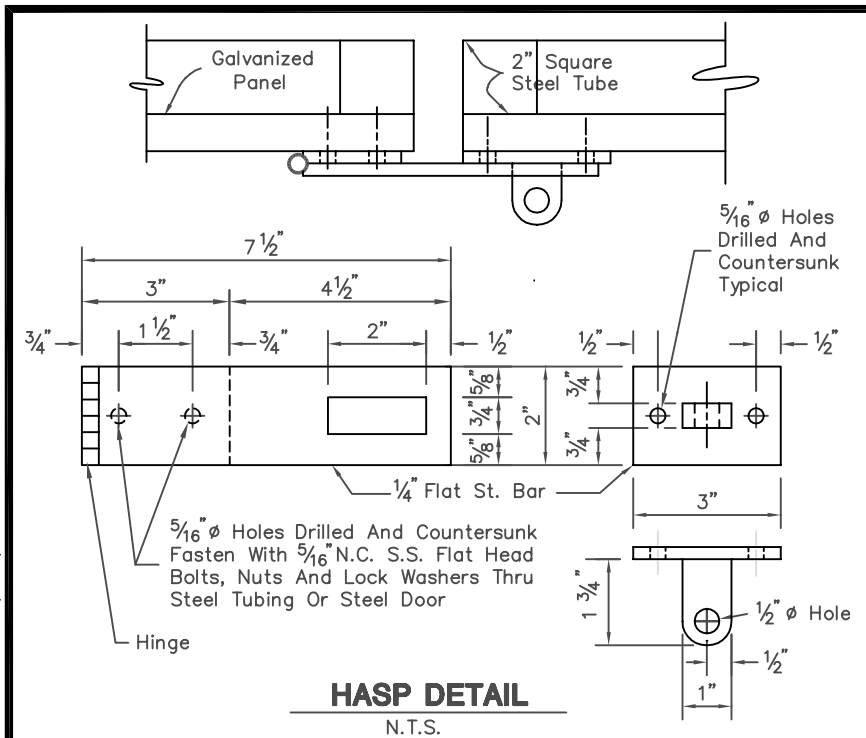

HASP DETAIL

N.T.S.

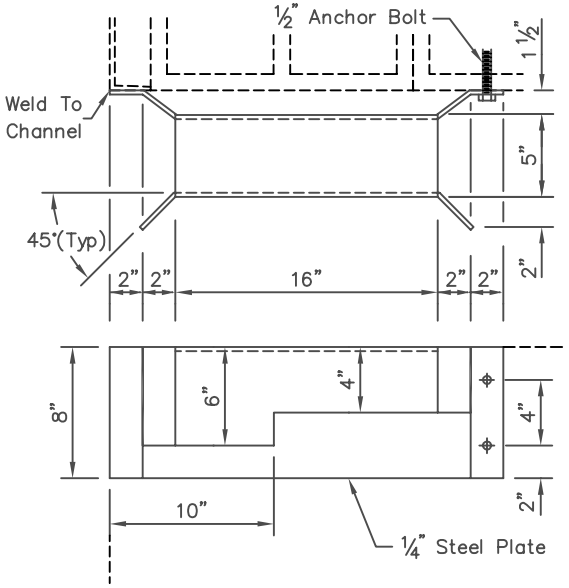

GATE GUIDE DETAIL

(Make 2, 1 Opposite Hand)

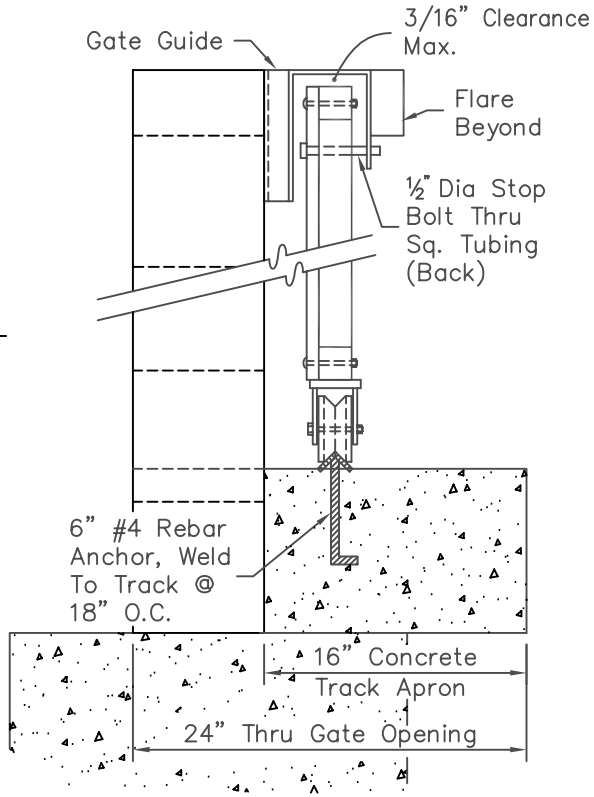

SECTION A-A

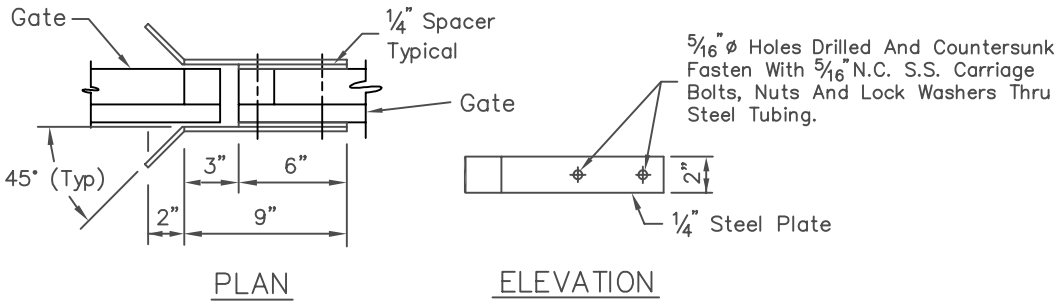

ALIGNING GUIDE DETAIL

2 Required

NOTES:

1. Contractor shall prime and paint all metal surfaces. Before application, the color and manufacturer of the paint shall be approved by the City.
2. Prior to painting, all surfaces shall be cleaned free of concrete, mortar, rust, dirt and any other objectionable materials.
3. Apply one (1) primer coat and two (2) exterior alkyd gloss enamel coats to metal.

DETAIL NO. 2165-2	City of Scottsdale Standard Details	APPROVED BY: _____	16' SLIDING GATE	DETAIL NO. 2165-2