NOTE:

1. ½" Expansion Joint, ASTM D–1751 Per MAG Section 729.

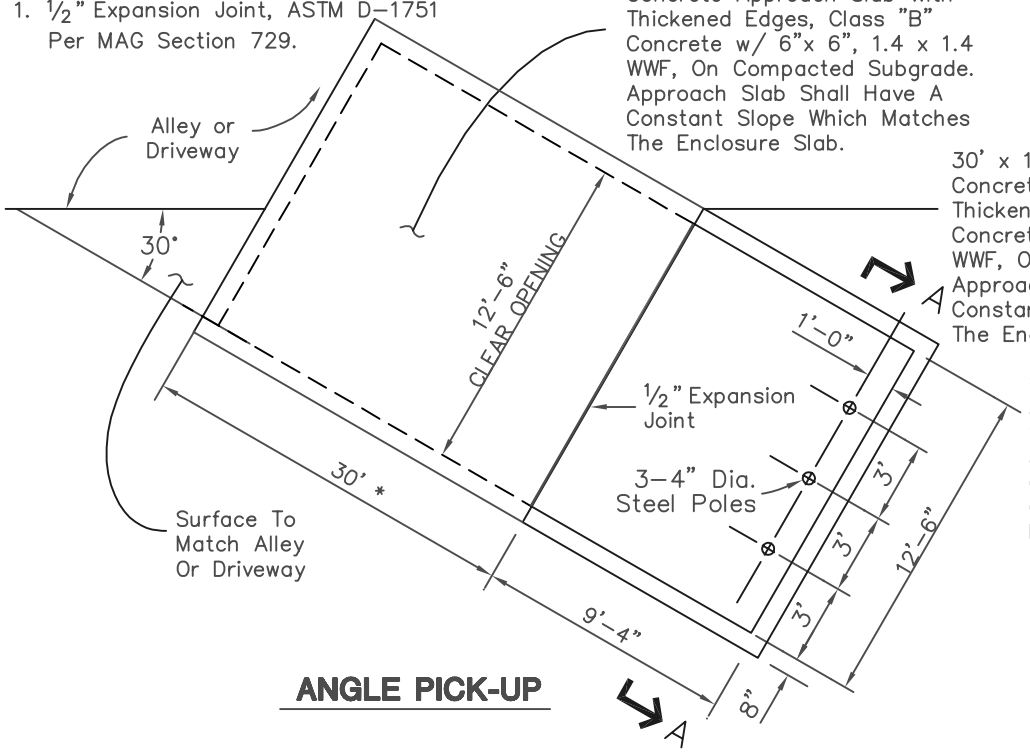


* In locations where a 30' approach slab is not possible, approval from the City of Scottsdale Quality Compliance Division is required.

## ANGLE PICK-UP

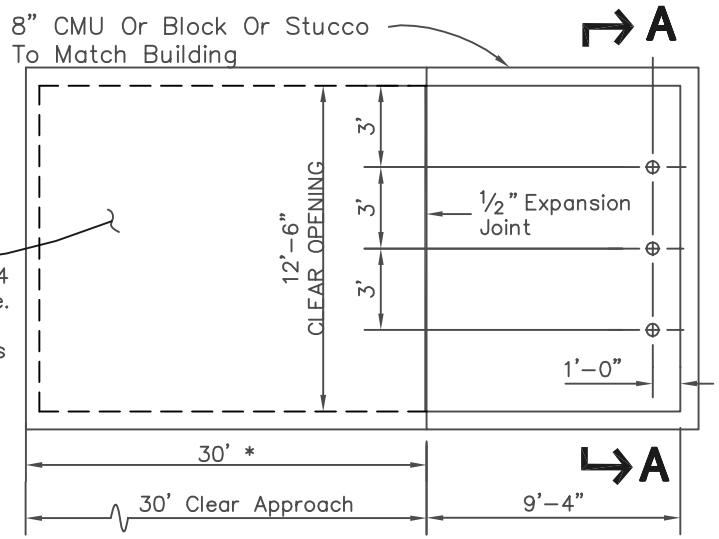


## HEAD ON PICK-UP

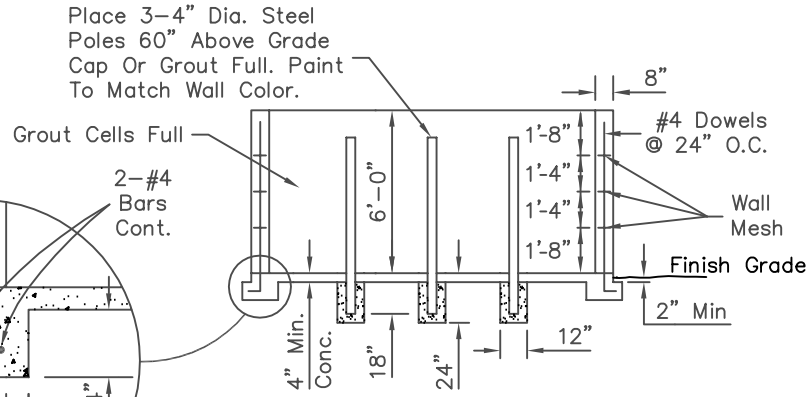


## SECTION A-A

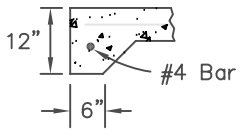


## APPROACH SLAB THICKENED EDGE DETAIL

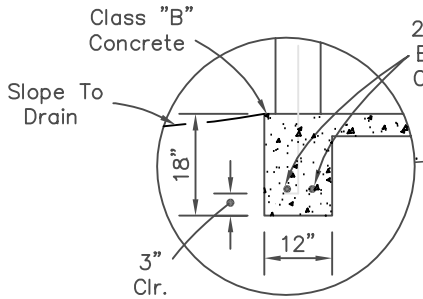


OR Alternate Footing

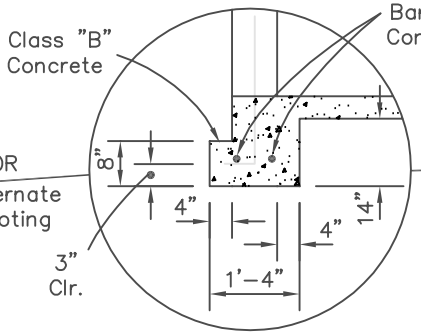


REVISED 5/9/02

| DETAIL NO. 2146-1 | City of Scottsdale Standard Details | REFUSE ENCLOSURE | DETAIL NO. 2146-1 |
|---|---|---|---|