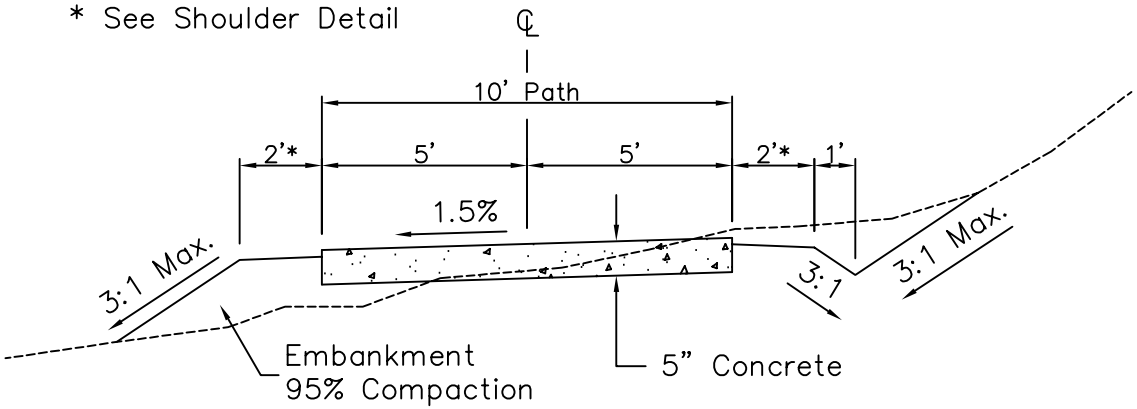

MULTI-USE PATH DETAIL

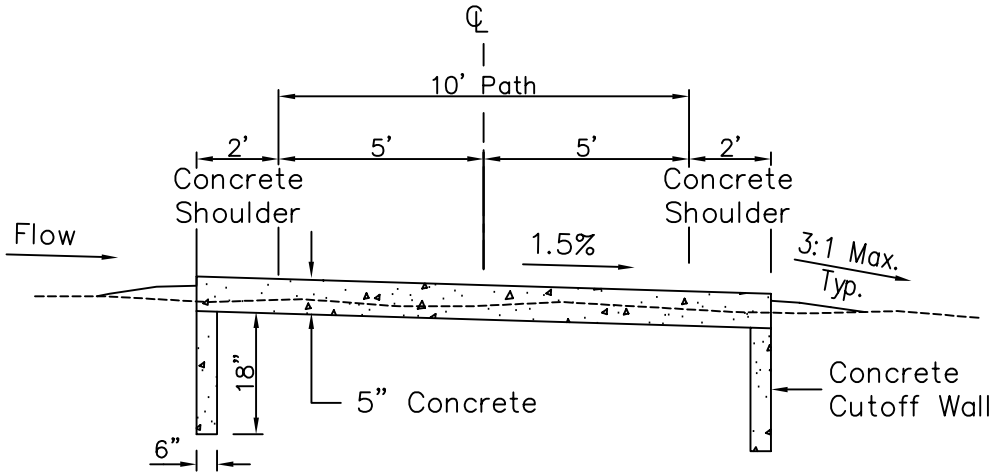

MULTI-USE PATH WET AREA CROSSING

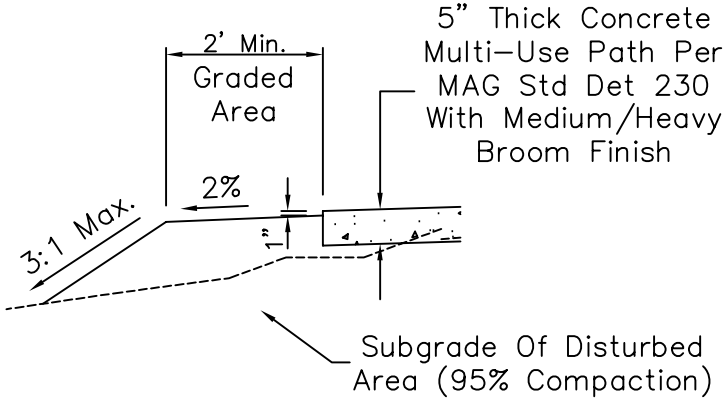

SHOULDER DETAIL

Note: A 3' x 3' Test Panel Shall Be Poured and the finish approved by COS Bicycle Staff At (480)312-7696.

REVISED: 2/26/01

DETAIL NO. 2283	City of Scottsdale Standard Details	MULTI-USE PATH DETAILS	DETAIL NO. 2283