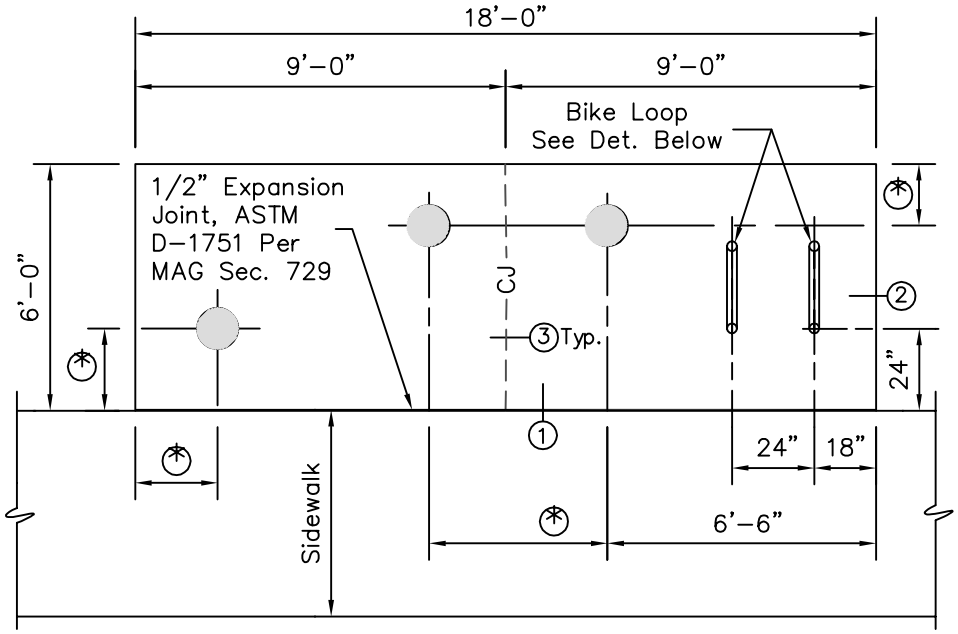

SHELTER SLAB PLAN

NOTES:

1. Concrete shall be Class "A" per MAG Sec. 725. Slab surface shall be trowel finish with salt pitted appearance and random sweat. Use integral color when specified on the plans.
2. "⊛" Blockout locations for bench and trash receptacle as shown on Plans or specified by the Engineer.

LEGEND

– – – – CJ – – Control Joints

12" Dia. Blockout For Bench & Trash Receptacle

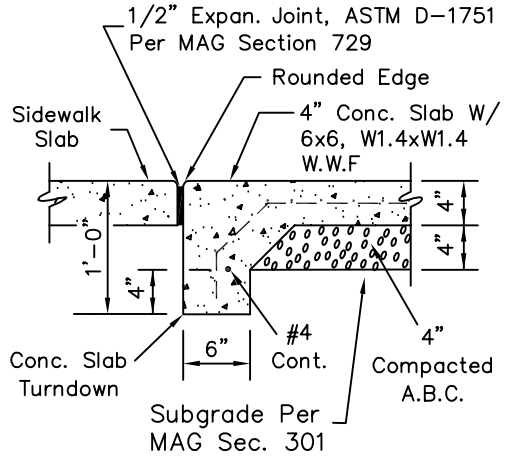

① SLAB EDGE AT SIDEWALK

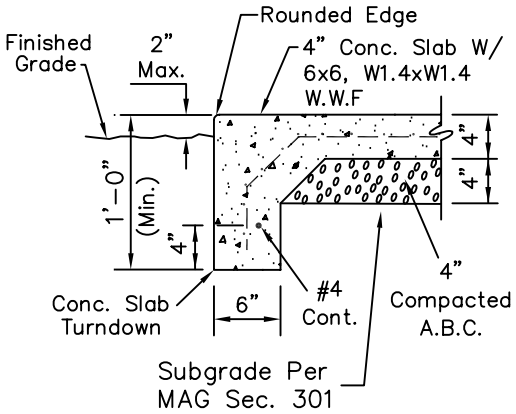

② SLAB EDGE AT GRADE

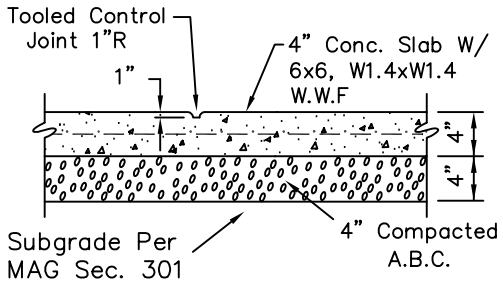

③ SLAB CONTROL JOINTS

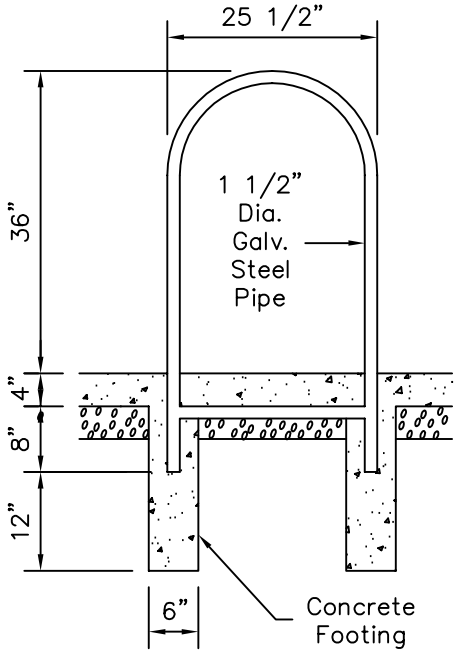

BIKE LOOP DETAIL

REVISED 7/1/97

DETAIL NO.		APPROVED BY:		DETAIL NO.
2269	City of Scottsdale Standard Details		TRANSIT SHELTER PAD	2269