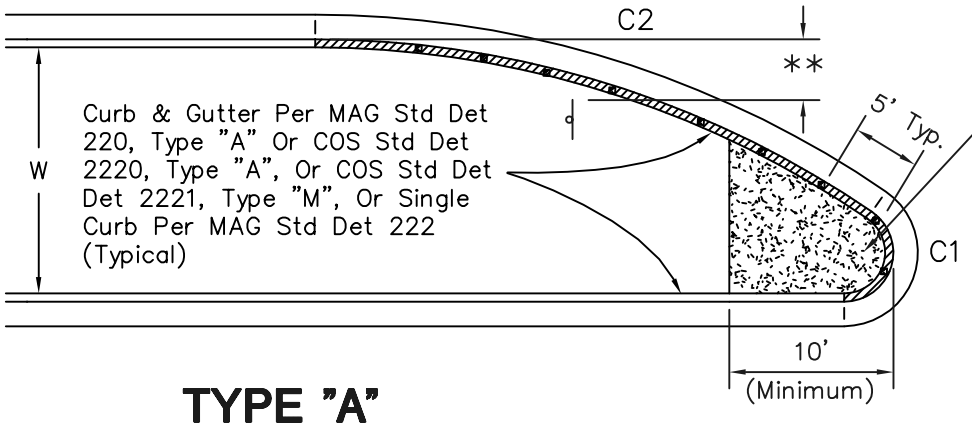

TYPE "A"

4" Thick Concrete Median Nose Paving MAG Std Det 223, or Exposed Aggregate Paving or Asphalt Print Paving per MAG and COS Section 343 (Typical)

* ALL RADII AND DIMENSIONS TO BACK OF CURB

** OFFSET TO BE NO MORE THAN 3' FROM FACE OF CURB AT TANGENT TO EDGE OF SIGN

CURVE DATA – W=15'					
CURVE	RADIUS *	LENGTH	TANGENT	CHORD	DELTA
C1	2.50'	6.35'	8.06'	4.78'	145°32'39"
C2	59.50'	35.78'	18.45'	35.24'	34°27'21"
C3	2.50'	5.74'	5.57'	4.56'	131°38'42"
C4	59.50'	25.11'	12.74'	24.92'	24°10'39"

Paint Top And Front Of Curb With Reflectorized Yellow Traffic Paint And Add Type "D" Yellow Reflective Raised Pavement Markers to Median Nose Nose, Spaced at 5-feet.

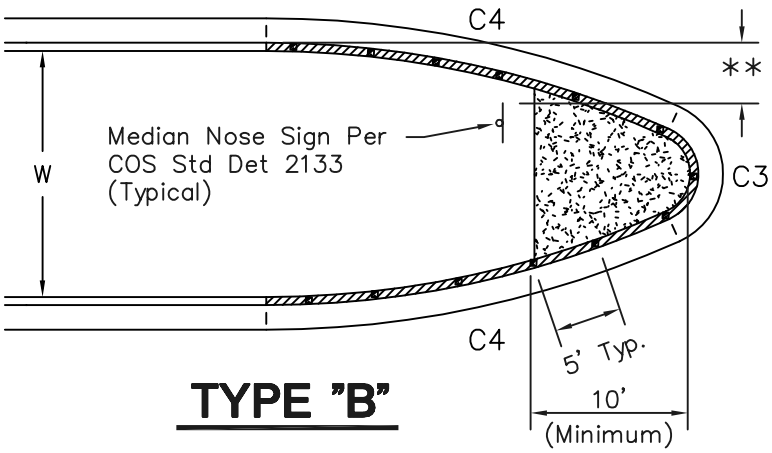

TYPE "B"

CURVE DATA – W=16'					
CURVE	RADIUS *	LENGTH	TANGENT	CHORD	DELTA
C1	2.50'	6.27'	7.65'	4.75'	143°48'20"
C2	59.50'	37.59'	19.44'	36.97'	36°11'40"
C3	2.50'	5.64'	5.27'	4.52'	129°14'46"
C4	59.50'	26.35'	13.40'	26.14'	25°22'37"

CURVE DATA – W=24'					
CURVE	RADIUS *	LENGTH	TANGENT	CHORD	DELTA
C1	2.50'	5.75'	5.59'	4.56'	131°48'37"
C2	59.50'	50.04'	26.61'	48.58'	48°11'23"
C3	2.50'	4.93'	3.77'	4.17'	112°53'08"
C4	59.50'	34.85'	17.94'	34.35'	33°33'26"

REVISED 3/28/02

DETAIL NO. 2226

City of Scottsdale Standard Details

MEDIAN NOSE DETAILS

DETAIL NO. 2226