Quality Submittal Guidelines

Single Family Custom Houses, Guest Houses and Major Additions/Remodels

The City of Scottsdale will not accept incomplete plans for compliance review of single family dwellings.

Development Services will require all single family residential plans submitted for first review to meet minimum submittal requirements, including engineered truss designs when applicable. A ***plan submittal check sheet*** will be used to determine whether plans are complete for review.

Incomplete submittals absorb unnecessary plan review and customer time. Deficient plan information provides insufficient opportunity for plan review comments. Consequently, such plans are rejected and will not receive correction comments until the second submittal, requiring a third submittal for approval before building permit issuance.

By establishing minimum submittal requirements, we hope to reduce the number of plan resubmittals.

Planning & Development Services Department
Plan Review and Permit Services Division
7447 East Indian School Road, Suite 105
480-312-2500

Deferred Submittal Form

Request for Waiver of Plans & Calculations Requirement

This does NOT permit the violation of any section of the International Building Code, or any federal, state or local regulations.

Project Name: _____ Plan Check No.: _____

Address: _____ Building Permit No.: _____

Deferred Submittal Work to be covered by this Form: _____

Deferred submittal documents, plans, calculations shall be submitted to the Building Official for review prior to start of construction work when it is specifically noted on plans. Review of **plant manufactured elements** is deferred to the professional in responsible charge and may not be submitted to the Building Official unless noted otherwise on plans. Deferred submittal documents shall be reviewed and accepted by the registered professional in responsible charge, and prior to submitting to the Building Official (107.3.4.1).

Identify below work covered by this waiver.

OWNER'S CERTIFICATION

To be completed and signed by **Owner** before a building permit is issued.

I hereby request waiver of the requirement that plans and calculations for the above-described structural elements be submitted to the Building Official.
I hereby certify that I shall be responsible for such plans and calculations being furnished to the registered professional responsible for this project. The differed submittal items shall not be installed until deferred documents have been approved by the professional in responsible charge and accepted by the Building Official when requested.

Owner/Agent Signature: _____ Date: _____
(Agent: include title, relationship to project, and furnish letter signed by owner authorizing you as agent)

CERTIFICATE OF RESPONSIBILITY

To be completed and signed by **the licensed professional in charge of structural design** before a building permit is issued.

I hereby certify that I shall be responsible for such documents plans and calculations (and/or structure) conforming to the overall structural design of the building.

Seal, Signature & Date

CERTIFICATE OF COMPLIANCE

To be signed by **registered professional responsible** upon completion of the work.

I certify that I have reviewed the deferred submittal work for structural component or subsystem for conformance to the intent of the structural contract documents.

I further certify that I have reviewed the shop fabrication and layout drawings as submitted by the contractor; and found the supplier-designed drawings of components or subsystems as being in conformance with the structural contract documents.

Seal, Signature & Date

Planning and Develoment Services

7447 E Indian School Road, Suite 125, Scottsdale, AZ 85251 ◆ Phone: 480-312-7080 ◆ Fax: 480-312-7781

Plan Check # _____
Cycle: ☐A ☐B ☐C ☐D

Administrative Review
Minimum Submittal Requirements and Checklist
Single Family Custom Houses, Guest House, and Major Additions/Remodels

Senate Bill 1598 (A.R.S. § 9-835(D)) passed by the Arizona Legislature in 2011 requires an Administrative Review of permit applications. A letter of Administrative Completeness or a Notice of Deficiency must be issued to the applicant during the Administrative Review Time Frame. This document serves as that notice. This checklist has been provided to assist the applicant in preparing a complete application. Only complete applications can be accepted for plan review.

Important notice: Incomplete plans will not be accepted for substantive review.

The Building and the Planning/Engineer Construction Document Plan Sets with the Additional Supporting Information shall be Separated into Separate Submittal Packets prior to Logging in at the One Stop Shop.

Submittal Requirements:

Provided	Not provided		
☐	☐	1 copy	Completed Permit Application – Residential entitled, "Permit Application - *Residential, Commercial and Civil / Improvement Plans* (http://www.scottsdaleaz.gov/bldgresources/forms)

Building Construction Document Plan Set and Additional Supporting Information

Provided	Not provided		
☐	☐	1 copy	Complete sealed set of plans; including civil site plan, mechanical, electrical
☐	☐	1 copy	Water meter calculations
☐	☐	1 copy	Soils Waiver or Soils Report
☐	☐	1 copy	Structural Calculations
☐	☐	1 copy	ResCheck energy code compliance (www.energycodes.gov)
☐	☐	1 copy	Owner Builder Statement
☐	☐	1 copy	Truss calculations* *unless plans designed & sealed by an Arizona registrant
☐	☐	1 copy	Deferred submittal form
☐	☐	1 copy	Manual S and J HVAC equipment design calculations

Planning, Engineering, and Drainage (Stormwater Management) Construction Document Plan Set and Additional Supporting Information

Provided	Not provided		
☐	☐	1 copy	Request for site visit – signed
☐	☐	3 copies	Civil Site Plan(s) (Grading & Drainage Plan)
☐	☐	3 copies	Native Plant Inventory and Plan (24" x 36" Plan size – may be on the Civil Site Plan)
☐	☐	3 copies	Revegetation (ESL areas only)
☐	☐	1 copy	Floor Plan
☐	☐	1 copy	Foundation Plan
☐	☐	3 copies	Building Elevation Plan
☐	☐	3 copies	Roof Plan Analysis
☐	☐	1 copy	404 Certification
☐	☐	1 copy	Drainage Report (for lots in A, AE, AO, AH, flood zone)
☐	☐	1 copy	Commitment for Title Insurance or Title Insurance Policy (no older than 30 days) is required when making any of the following dedications:
☐	☐	1 copy	Drainage Easement Dedication Legal and Graphic Description (when applicable)
☐	☐	1 copy	NAOS Dedication Legal and Graphic Description (when applicable)
☐	☐	1 copy	Right-of-Way Dedication Legal and Graphic Description (when applicable)
☐	☐	1 copy	Public Non-Motorized Access Easement Dedication Legal and Graphic Description** **when applicable for trail dedications

Per the requirements of Senate Bill 1598, this permit application is:

☐ Accepted as Administratively Complete.

☐ Deficient, items marked "**NOT PROVIDED**" are required for plan acceptance.

_____
Date

Contact staff for questions regarding the Administrative Log-In Review Screening.

_____
Staff Member

Customer Signature: _____

Print Customer Name: _____

Phone: _____ Date: _____

This Administrative Review is valid for 180 days from the date of acceptance. For additional information, visit our website at http://www.scottsdaleaz.gov/bldgresources/forms.

Planning & Development Services Department
7447 E Indian School Road, Suite 100, Scottsdale, AZ 85251 ◆ Phone: 480-312-7800 ◆ Fax: 480-312-7088

notice

PLAN SUBMITTAL REQUIREMENTS FOR PROJECTS INCORPORATING RETAINING WALLS

All private project development plans

in the "building review" sets of plans :
include retaining wall details and calculations, and a copy of the civil grading site plan with any retaining walls or other structures called out. Retaining walls must have the top of wall and top of footing elevations noted.

in the "civil review" sets of plans :
the civil grading site plan must have any retaining walls or other structures called out. Retaining walls must have the top of wall and top of footing elevations noted. Any change in site grading that affects the height or configuration of retaining walls will be transmitted to the person reviewing the building plans.

City infrastructure, subdivisions and development projects without buildings

include details and calculations of retaining walls and other structures in the "civil review sets of plans.

Fees (onsite private development) :

Bridges	**one-half building square foot fee**
except	**for minimum**
Retaining Walls :	**same as fence fee - lineal feet**

NOTICE

9/28/99

BENCHMARKS ON IMPROVEMENT PLANS

Effective immediately: All improvement plans must contain a City of Scottsdale NAD 88 Benchmark on the Cover Sheet, *with an elevation equation as required*. All improvement plans must also contain a statement certifying the datum used for all elevations represented on the plans. *This certification shall be included on the plan Cover Sheet immediately below the Benchmark and shall state one of the following:*

I hereby certify that all elevations represented on this plan are based on the elevation datum for the City of Scottsdale Benchmark provided above.

OR:

I hereby certify that all elevations represented on this plan are based on the elevation datum equation to the City of Scottsdale Benchmark as provided above.

In addition, all plans that include an occupiable structure, residential for non-residential, shall continue to be required to provide a Lowest Floor elevation on the plans, including the Engineers Certification. The format for the Lowest Floor elevation shall be as follows: $L.F._{88}$ = XXXX.YY, where the complete elevation is stated (e.g. 2695.67, not 95.67 or 695.67) and shall be based on the NAD 88 elevation datum not an equated datum for the site.

SINGLE FAMILY NATIVE PLANT SUBMITTAL REQUIREMENTS

1. **Provide Salvage information on grading and drainage/site plan including City-approved salvage company and the location by tag number of each plant which is required to be protected per the Native Plant Ordinance.**

-OR-

Three (3) copies of a separate 24" x 36" native plant salvage assessment performed by a City of Scottsdale approved salvage contractor (which corresponds to the tag number on the site plan) indicating the following:

a) **Plant type**
b) **Plant location**
c) **Plant size in caliper inches/height**
d) **Plant salvageability:**
Whether the plant will remain in place, be moved to another location, or be destroyed ☙

2. **Plant materials shall be tagged in the field for City Staff review with the following:**
   a) **Plastic tape to correspond to the determinations made in 3.d. above:**

      * **White tape - remain in place**
      * **Red tape - moved to another location**
      * **Blue tape - destroyed**

   b) **Tag numbers that correspond to the site plan and to the plant inventory**

   c) **Tag number is to be transferred to the side of the box when side boxing is completed**

☙ Any plant which is destroyed must have an explanation detailing why the plant cannot remain in place or be moved

Native Plant Salvage Contractors

With Acceptable Methodologies on File

Please visit www.ScottsdaleAz.gov/codes/NativePlant
for information regarding the Native Plant Ordinance and submittal information.

The following contractors have submitted salvage methodologies for native plant salvage and relocation. While the salvage of native trees is still somewhat experimental, their methodologies have received approval for use within the City of Scottsdale. A company must be on the Native Plant Salvage Contractors list before they will be allowed to conduct native plant inventories and salvage protected native plants within Scottsdale. Contractors wishing to be placed on this list may contact the City's Planning & Development Office at (480) 312-7000 for further information. This list is offered as a courtesy and does not constitute an endorsement of any of the contractors listed.

Name	Tax #	Phone		Name	Tax #	Phone
A Great Southwest Tree Spade LLC (spade) +	912511	480-483-8355		Harris & Sons - tree relocators (spade)		602-863-9336
Agave Environmental Contracting	120268	602-254-1454		Horizon West Landscape, LLC	881241	623-386-6194
Arbor Care Experts	1084338	602-568-8139		Indigenous Landscape Systems, Inc.	137914	602-867-8831
AridScape Concepts * +	858783	480-609-1221		JD Consulting, LLC *+	1061445	480-274-7102
Arizona Site Prep, Inc. +	858621	480-226-9548		John Hancock Tree Relocation, LLC	1052563	480-833-0655
Arizona's Best Native Plant Care	131407	480-948-7501		Masterscapes, LLC*+	1080688	623-780-0474
Artisan Group* +	1079828	602-380-1001		Native Arizona Landscaping, Inc.	143551	480-563-7562
AZ Big Tree Movers (spade)	903229	602-370-5667		Native Landscape Development * +	887196	480-575-1229
BarbaRosa's Cactus - cactus relocators +		623-582-8555		Native Resources International *+	131603	623-869-6757
Black Eagle Nurseries and Maintenance, Inc.* +	885253	602-323-1558		Natural Habitat Inc.+	880704	480-488-9088
Complete Custom Development, Inc.	142045	480-860-0355		Recon Inc.	1040767	602-437-4393
Desert Earth Works LLC	0874981	602-788-5018		Renaissance Exterior Development	110367	480-585-7830
Desert Restoration and Development +	143113	480-595-7751		Sonoran Desert Designs * +	100799	602-708-0185
DLN Landscaping Inc.	122534	602-843-1915		Trademark Landscape	134510	602-866-7100
Earth Care - cactus relocators +	134994	480-488-2915		Tree Relocators, Inc. – (spade) * +	914020	480-947-6118
Enviroscape Designs	893518	480-962-1536		Tree Transplanter & Mover +	858138	480-844-8978
Evergreen Lawn Sprinklers	100407	602-243-1106		Woody's Landscaping, LLC	144135	602-868-6232
Gothic Landscaping Inc.	131088	602-470-1711				

* Companies that have CAD software capabilities

\+ Companies that do inventory work for single family homes

Planning & Development Services

7447 E Indian School Road, Suite 105, Scottsdale, AZ 85251 ◆ Phone: 480-312-7000 ◆ Fax: 480-312-7088

Single-Family Plan Requirements

Planning Plan Review Checklists

There are four (4) Planning division plan review checklists; the appropriate checklist for your project is determined by the parcel zoning designation.

Refer to your zoning and then download the appropriate checklist from www.scottsdaleaz.gov/bldgresources/forms.asp (i.e. “Single-Family Plan Requirements - ESL Areas”).

- Non-ESL 1 page
- ESL 8 pages
- FO 8 pages
- HD 6 pages

ESL *Environmentally Sensitive Lands Overlay*
FO *Foothills Overlay*
HD *Hillside District Overlay*

2012 INTERNATIONAL RESIDENTIAL CODE
Building Code Plan Review Checklist

CONSTRUCTION DOCUMENTS MINIMUM DESIGN GUIDELINES

TABLE R301.2 (1) amended

CLIMATIC AND GEOGRAPHIC DESIGN CRITERIA

ROOF SNOW LOAD	WIND	SEISMIC DESIGN CATEGORY[f,g]	SUBJECT TO DAMAGE FROM				WINTER DESIGN TEMP[f]	FLOOD HAZARDS[h]
	Speed[e] (mph).		Weathering[a]	Frost line depth[b]	Termite[c]	Decay[d]		
0	**90 Exposure C**	**B**	**Negligible**	**Final Grade**	**Moderate to heavy**	**None to slight**	**34 degrees**	

BUILDING CODE DESIGN DATA

All construction within Scottsdale shall comply with the following codes and amendments per their adopting ordinances:

2012 International Building Code (ord. # 4059)
2012 International Residential Code (ord. # 4060)
2012 International Fire Code (ord. # 4045)

APPLICANT: Correct plans where the following items have been checked.

- ❑ Provide Civil Site plan.
- ❑ Refer to plan set for red lines. Correct plans as marked or submit equivalent alternate corrections.
- ❑ IRC sections indicated are for your convenience in detailing code requirements.
- ❑ Do not quote code IRC Sections in lieu of providing plan set notes and revised details.
- ❑ **IMPORTANT:** Please return all documents indicated on the Resubmittal Checklist.
- ❑ Plan set is incomplete. Next submittal may require additional review(s).
- ❑ Plans must be readable and to “scale”.
- ❑ Specification books on Single Family Plan checks are not acceptable.
- ❑ Place all required notes on the drawings.
- ❑ Provide a True North Arrow and an Orientation North Arrow on site plans and floor plans.

A. Standard Plans

1. Provide a soils report and a compaction tests for the subdivision.
2. Per the soils report provide over-excavation and / or re-compaction for foundations and slabs on grade.
3. Place the following notes in **bold type** on the foundation plan and floor plan sheets:
   a. This standard plan is not approved for locations within 5 feet of an adjacent property line. (NOTE: Zoning setbacks or Design Review Board stipulations may be more restrictive.) (R302.1)
   b. Projections shall not extend more than 12" into the areas where openings are prohibited.
   c. Overhangs and projections within 5' of the property line shall be of one-hour (fire rated) on the underside.
   d. Eaves over required bedroom egress windows shall not be within 30" of the side and rear property lines.
4. Provide a continuous three foot wide path of travel from all bedroom egress windows to a public way.
5. Show minimum allowable dimensions from stem wall to property lines on foundation plan.
6. Remove all parcel/lot specific information from plan set. (i.e. site plan).
7. The cover sheet must have key plans drawn to scale indicating each possible combination of footprint options with corresponding building ridge lines to ensure conformance with varying lot configurations.

B. Add/ Alt/ Remodels

1. Provide scope of work. (IBC 107.2.1 amend.)
2. Provide separate existing and demolition plans. (IBC 107.2.1 amend.)
3. Clearly identify throughout, existing vs. new vs. remodeled area. (IBC 107.2.1 amend.)
4. Complete and return fire sprinkler worksheet. (IFC 903)
5. Address smoke and CO detectors throughout house with additions/alterations/remodels. (R314-315).

C. Site Plan

1. Provide a complete site plan, grading and drainage where required. (IBC 107.2.5, R302.1).
2. Provide a complete project address. (R319.1)
3. Show location of structure(s) with setback dimensions on site plan. (IBC 107.2.5, R302.1).
4. Show location of all site fences and retaining walls on site plan. Provide lineal footage of fences and retaining walls. (IBC 107.2.5)
5. Reference on site plan, structural details for each site retaining wall and fence. (IBC 107.2.5).
6. Provide structural calculations for retaining walls. City of Scottsdale, Administrative Policy 13-3.
7. Show sewer tap location at street. (P3008.1)
8. Show and identify next upstream manhole rim location and elevation, address backwater valve. (P3008.1).
9. If septic system, provide copy of septic system permit application from Maricopa County. (P2602.1)
10. When enclosing pool, provide minimum 3-foot wide, minimum 60-inch high, out-swinging, self-closing gate. (AG103.1).

D. GREEN BUILDING (IBC 102.4.3)

1. Provide a separate plan sheet listing the minimum 28 "green" building requirements and the options selected from the 300 available. Include the points permitted for each selection and a total summary (minimum 50 points for entry level and 100 points for advanced level)
2. Incorporate the "green" building requirements with-in the plan design, including notes and details, (i.e. carbon monoxide detectors locations and 1.3 or less gal/flush or dual-flush toilets, etc).
3. Provide the most current Testing or Evaluation Report for the Building Product(s), i.e. Rastra, Eco-block, Tech-Block, Etc.
4. Incorporate Designs, Details, Instructions and Requirements from the Evaluation Report(s) onto the plans and reference where applicable.
5. Provide REScheck or equal for each house.
6. Place the following note in large text on the Plan Sheets (Floor, Foundation, Roof Framing):

NOTE: To maintain "Green Building" status, separate "Green Building" inspections are required prior to covering work.

E. Floor plans

a) Doors and Windows

1. Provide a 1-3/8" solid door …self-closing, self-latching, between residence and garage. (R302.5.1 *amend.*).
2. Provide permanent landing at exterior doors. (R311.3.2 *amend*).
3. Doors shall not open directly between a sleeping room and a garage. (R302.5.1).
4. Shower doors shall have safety glazing; hinged shower doors shall open outward. (R308.4.5, P2708.1).
5. Provide and identify all required safety glazing. (R308).
6. Indicate emergency escape and rescue openings in basements and bedrooms. (R310.1).
7. Show direction of door swing. (R311.3.2 *amended*).
8. Show size of each window and type of operation. (R303.1, 310.1.1-.4).
9. Show type of structural silicone for butt-glazed windows. (Interpretation 98-11).
10. Glazing maximum U-factor 0.40, Solar Heat Gain Coefficient (SHGC) Maximum 0.25 (TN1102.1.1)
11. Opaque doors separating conditioned and unconditioned space- maximum U-factor 0.40. (TN1102.1.1).
12. Skylight - maximum U-factor 0.65. Provide manufacture and ICC-ES number. (TN1102.1.1).

b) Light and Ventilation

1. Provide required natural light and ventilation for habitable rooms (R303.1). Light: 8%, ventilation: 4%.
2. Provide mechanical exhaust ventilation for bathrooms, water closet rooms, laundry room, and kitchen, ducted direct to outside. (R303.3 amended, (M1507.2).
3. Provide attic ventilation per (R806.1) unless insulation is applied on the under-side of roof sheathing. (R806.5 #5).

c) Stairways, handrails, guardrails

1. Show handrail, notes and dimensions where required (R311.7.8).
2. Show guardrails where required. (R312.1, .2).
3. Provide a floor or landing at the top and bottom of each stairway. (R311.7.6).
4. Provide code complying stairways; address tread and riser dimensions per type of stairway. (R311.7).
5. Provide stairway illumination per (R303.7.9)
6. Stairway maximum 12' vertical rise between floor/landing (R311.7.3).

d) Fire Places/Gas Appliances

1. Provide manufacture, model number and ICC report or equal for each fireplace. (R1002, 1004, 1005).
2. Provide a permanently installed approved decorative appliance/gas log set. (R1004.4).
3. Fireplace dampers: Where a listed decorative appliance is installed, the fireplace damper opening shall comply with listed decorative appliance manufacture's installation instructions. (G2453.1)
4. Decorative shrouds shall not be installed at the termination of chimneys of factory-built fireplaces except where listed and labeled for such use. (R1004.3)
5. Provide outside combustion air for interior fireplaces. (R1006.2).

e) General Floor Plan

1. Show ceiling heights for all rooms, spaces and hallways. (R305).
2. Show minimum clearances from centerline of water closets to finished wall, cabinets, and other plumbing fixtures. (R307.1, P2705.1).
3. Gypsum Board applied to a ceiling shall be 1/2" when framing members are 16" o.c. or **5/8"** when framing members are **24" o.c.** or use labeled **1/2" sag-resistant gypsum ceiling board**. (Table R702.3.5 (d)).

f) Manufacturers' Installation Instructions

1. Manufacture's installation instructions, as required by this code, shall be available on the job site at the time of inspection (R106.1.2)
2. RANGES AND COOKTOPS: Show note on plans. -Provide a listed and approved range and/or cooktop unit installed in accordance with the listing and with the manufacturer's installation instructions. VERIFY AND MAINTAIN REQUIRED HORIZONTAL AND VERTICAL CLEARANCES ABOVE THE FINISHED COUNTERTOP SURFACE BEFORE ORDERING OR INSTALLING CABINETS-.

F. Braced/Shear wall Plan

1. Provide a complete braced/shear wall plan and reference a braced /shear wall schedule at each braced/shear wall location. (R602.10).
2. Braced/Shear wall schedule to include anchor bolts, holdowns, studs and spacing, sheathing and nailing. (T.602.3(1)), (R403.1.6, 403.1.6.1).
3. Address 'alternate braced wall panels' per (R602.10.6).
4. Coordinate post locations with holdowns on foundation plan. (R602.11.1).
5. Show and identify each required holdown on foundation plan.
6. Provide Wood-Stud wall Engineering Analysis for bearing walls Over 10 Feet High (T. R602.3 (5)).

G. Elevation Plan

1. Provide minimum of four elevation drawings of building, typical front, back, left, right.
2. Show building heights and dimensions.
3. Show and label all exterior surface building materials. (R703).
4. Show manufacture, model number and ICBO/ICC/NER Report Number for stucco, roof materials, stone veneer. (R703.7).
5. Provide weather flashing/proofing and exterior wall penetrations/openings. (R703.1, 703.2, 703.8).

H. Sections

1. Provide minimum two building cross sections.
2. Cut cross-sections on foundation, floor and roof framing plans.
3. Foam plastics shall be separated from attics and crawl spaces. (R316.4).
4. Show required fire blocking on each section. (R602.8).
5. Show height dimensions on each cross-section.
6. Label all rooms, spaces, and hallways on each section.
7. Provide and reference/key structural details for critical connections for cross-sections.

I. Wall Construction

1. Provide a cross section detail and wall legend for each type of wall.
2. Callout exterior materials, including, stucco system, lath, building paper, foam, and sheathing where required. (R703).
3. Specify on plans, interior wall materials. (R702).
4. Specify on plans, interior wall construction, coverings, and backings for tile and in wet locations. (R702.1).
5. Provide weepscreed and dimensions from soil and paved surfaces. (R703.6.2.1).
6. Provide nailing schedule. (R602.3 (1)).

J. Foundation Plan

1. For single-family custom submittal, provide a soils report or a soils waiver signed by owner.
2. Provide a complete fully dimensioned and detailed foundation plan.
3. Address foundation drainage per (R405.1).
4. Address foundation damp proofing (R406.1)
5. Show isolated footing dimensions, and reinforcing. (Table R403.1 amended).
6. Show note: Exterior and interior footings shall bear minimum 18 inches below undisturbed soil or engineers certified compacted fill. (Table R 403.1).
7. Show required reinforcing steel for all footings and stem. (R 403.1.3.1).
8. Reference a complete set of structural details, footing, stem, turndown, pad footing, post at stem…
9. Clearly show, dimension and detail interior bearing footings and shearwall footings.
10. Clearly show each required post location on foundation plan, coordinate with shearwall and roof framing plans.
11. Clearly show and label each required holdown on foundation plan. (R403.1.6).
12. Show and detail building retaining walls and basement and foundation walls, including drainage. (R 405.1)
13. Provide any/all slab elevations.

K. Floor and Roof Framing Plans

1. Provide a complete fully detailed floor and/or roof-framing plan. (R106 amended).
2. Clearly identify all framing members, including posts/columns, headers, beams, joists, and trusses. (R106 amended).
3. Clearly show each required post and size, coordinate with foundation plan.
4. Show and identify posts from above framing.
5. Show floor-to-floor tie, mechanical connectors.
6. Clearly show and identify all truss/joist hangers.
7. Cleary show and identify beam to post mechanical connectors.
8. Clearly show and key detail reference(s) for each beam to post, beam-to-beam, and girder to beam connections.
9. Detail typical truss/joist to wall, beam, and girder connections.
10. If pre-qualifying conditions are met, **deferred submittals** for truss design drawing may be allowed per (R802.10.1.1 amended).
11. Show lateral full height blocking at braced/shear wall line for joists, rafters and trusses.
12. Framing details shall reflect types of framing members, trusses flat and sloped, I-joists, dimension lumber rafters…
13. Show stair mechanical attachment at top and bottom.
14. Framing members to accommodate masonry fireplace clearances to combustibles. (Table R1001.1).
15. Provide seismic strap per (R1003.4.1).
16. Provide detail showing how lateral forces are transferred from roof diaphragm into shear wall.
17. Identify all trusses used as drag struts, and show loads on framing plan.
18. Framing members to accommodate mechanical equipment requirements if installed in attic.

L. Structural Calculations

1. Provide the following structural engineering calculations:
   a. Gravity loads analysis.
   b. Lateral loads analysis.
   c. Retaining wall calculations per policy #13-3.
   d. Provide special inspections per (IBC Ch. 17).

M. Mechanical plans

1. Show mechanical equipment and water heaters on 18-inch platform if placed in garage or room with direct access to garage. (M1307.3).
2. Provide combustion air and show hi and low vent opening sizes for gas fuel appliances located in *confined* spaces. (G2407).
3. Provide and reference approved detail for gas piping to gas island cooktop. (G2415.14).
4. Provide kitchen exhaust fan vented direct to outside. (M1507.2 amend. T.M1507.4).
5. Provide minimum 78% AFUE (Annual Fuel Utilization Efficiency) for weatherized gas heating equipment, Non-weatherized equipment minimum 80% AFUE. (T.N1105.5.2 (1)g).
6. Provide minimum 13 SEER (Seasonal Energy Efficiency Ratio) for air conditioning equipment. ((T.N1105.5.2 (1) h).
7. Provide HVAC equipment sizing calculations. Heating and cooling equipment shall be sized in accordance with ACCA Manual S based on building loads calculated in accordance with ACCA Manual J or other approved calculation methodologies. (N1103.6)
8. Duct systems serving heating, cooling and ventilation equipment shall be installed in accordance with the provisions of this section and ACCA Manual D or other approved methods. (M1601.1)
9. Show supply and return air ducts and registers. (IBC 107.2.1 amend.)
10. Supply and return ducts shall be insulated to a minimum **R-8**. Ducts in floor trusses shall be insulated to minimum R-6. (N1103.2.1).

N. Electrical Plan

1. Provide a complete Electrical Plan (IBC 107.2 amended).
2. Provide fully noted plan showing, all required receptacles, light fixtures, switches, exhaust fans, smoke detectors, service panels and sub-panels. (E3703, E3901).
3. Provide notes and symbols legend.
4. Show and label all required **GFCI** and **WP/GFCI** receptacles. (E3901.2, E3902, E3903).
5. Show and label all required **AFCI** circuits. (E3902.12).
6. In areas specified in Section E3901.1, 125-volt, 15- and 20-ampere receptacles shall be listed tamper-resistant receptacles. (E4002.14)
7. Provide minimum 75% high efficacy lamps. (N1104.1).
8. Show and label all **WP/DP** lighting fixtures as SUITABLE FOR WET OR DAMP LOCATIONS accordingly. (E4001.7).
9. Show and label all smoke alarms. Smoke alarms shall be installed in the following locations: 1. In each sleeping room. 2. Outside each separate sleeping area in the immediate vicinity of the bedrooms. 3. On each additional story of the dwelling, including basements and habitable attics but not including crawl spaces and uninhabitable attics. In dwellings or dwelling units with split levels and without an intervening door between the adjacent levels, a smoke alarm installed on the upper level shall suffice for the adjacent lower level provided that the lower level is less than one full story below the upper level. (R314).
10. Show and label all **carbon monoxide alarms**, an approved carbon monoxide alarm shall be installed outside of each separate sleeping area in the immediate vicinity of the bedrooms in dwelling units within which fuel-fired appliances are installed and in dwelling units that have attached garages. (R315).
11. Provide a UFER ground encased in concrete footing. (E3608.1.2).
12. For Electrical Services greater than 400 amps, PROVIDE ELECTRICAL LOAD CALCULATIONS.
13. Provide an ELECTRICAL SINGLE LINE DIAGRAM for Services 200 amps and larger.

O. Plumbing Plan

1. Provide a single line gas-piping diagram; include all gas burning appliances and BTUs of each appliance, show pipe *lengths* and *sizes* from gas meter to each branch line and to each appliance. (G2413).
2. Show type of gas piping. (G2414).
3. Do not place gas piping under slab. (G2415.14).
4. Provide approved detail for gas piping to kitchen island gas cook top. (G2415.14).
5. Provide minimum R-3 insulation to hot water pipes. (N1103.4).
6. Show all drainage/sewer piping materials. (Tables P3002.1, P3002.2)
7. Provide low flow plumbing fixtures. (P2903.2).
8. Provide roof drains and over-flow/scuppers. (R903.4).
9. Storage-tank type water heaters shall be installed with a drain pan and drain line. (P2801.5).
10. WH-pan drain-line shall terminate per (P2801.5.2).

P. Fire Sprinklers

1. Provide fire sprinklers per (IFC 903.).

Q. Energy Requirements

1. Complete and return REScheck or equal report. Compliance shall be demonstrated by a passing score. (T.N1102.1.4).
2. Comply with insulation requirements. (T.N1102.1.1.)
3. Comply with fenestration requirements. (T.N1102.1.1.)
4. At least one thermostat shall be provided for each separate heating and cooling system. (N1103.1).
5. A minimum of 75 percent of the lamps in permanently installed lighting fixtures shall be high-efficacy lamps or a minimum of 75 percent of the permanently installed lighting fixtures shall contain only high-efficacy lamps. (N1104.1).
6. Recessed luminaires installed in the building thermal envelope shall be sealed to limit air leakage between conditioned and unconditioned spaces. All recessed luminaires shall be IC-rated and labeled as having an air leakage rate not more than 2.0 cfm... All recessed luminaires shall be sealed with a gasket or caulk between the housing and the interior wall or ceiling covering. (N1102.4.4).
7. The building shall be provided with ventilation that meets the requirements of Section M1507 or with other approved means of ventilation. Outdoor air intakes and exhausts shall have automatic or gravity dampers that close when the ventilation system is not operating. (N1103.5).
8. The building or dwelling unit shall be tested and verified as having an air leakage rate of not exceeding 5 air changes per hour. Testing shall be conducted with a blower door at a pressure of 0.2 inches w.g. (50 Pascal's). Testing shall be conducted by an approved third party, (BPI or RESNET certified). A written report of the results of the test shall be signed by the party conducting the test and provided to the building official. Testing shall be performed at any time after creation of all penetrations of the building thermal envelope. (N1102.4.2).
9. Ducts, air handlers, and filter boxes shall be sealed. Joints and seams shall comply with Section M1601.4.1. Provide Duct tightness testing conducted by an approved third party testing agency (BPI or RESNET certified) and the signed written results shall be submitted to the Code Official prior to the Building Final. (N1103.2.2). Duct tightness shall be verified by either of the following:

   1. Post-construction test: Total leakage shall be less than or equal to 4 cfm per 100 square feet of conditioned floor area when tested at a pressure differential of 0.1 inches w.g. (25 Pa) across the entire system, including the manufacturer's air handler enclosure. All register boots shall be taped or otherwise sealed during the test.

   2. Rough-in test: Total leakage shall be less than or equal to 4 cfm per 100 ft2 of conditioned floor area when tested at a pressure differential of 0.1 inches w.g. (25 Pa) across the system, including the manufacturer's air handler enclosure. All registers shall be taped or otherwise sealed during the test. If the air handler is not installed at the time of the test, total leakage shall be less than or equal to 3 cfm per 100 square feet of conditioned floor area.
10. Supply and return ducts shall be insulated to a minimum **R-8**. Ducts in floor trusses shall be insulated to minimum R-6. (N1103.2.1).
11. Provide Minimum R-3 insulation on hot water pipes. (N1103.4).
12. Circulating hot water systems shall be provided when the length of hot water piping or tubing from the source of hot water to the furthest fixture exceeds 21 feet for a ¾ inch line, 32 feet for a 5/8 inch line, 43 feet for a ½ inch line and 50 feet for a 3/8 or less inch line. When the hot water distribution system contains more than one pipe or tube size, the largest size shall be used for determining the maximum allowable length before a circulating hot water system is required. **The circulating system shall be equipped with an automatic or readily accessible manual on switch and a t emperature sensor activated shut-off that can automatically turn off the hot-water circulating pump when the set temperature is reached.** For the purpose of this section, the source of hot water shall be considered to be a water heater, boiler, circulation loop piping, distribution manifold or heat-traced piping. (N1103.4.1 amended.).

REQUIRED RESIDENTIAL NOTES

The following notes shall be incorporated into the plans. If these notes are reproduced on the plans as a block, it will facilitate the review of the project. The notes are available and can be downloaded from.
http://www.scottsdaleaz.gov/bldgresources/planreview

PLACE THE FOLLOWING REQUIRED NOTES ON THE DRAWING

2012 International Building Code	(ord. # 4059)
2012 International Residential Code	(ord. # 4060)
2012 International Fire Code	(ord. # 4045)

1. All products listed by ICC/N.E.R. number(s) shall be installed per the report and manufacturer's written instructions. Product substitution(s) for product(s) listed shall also have an ICC approved evaluation report(s) or be approved.
2. Provide fire protection sprinkler system. (IFC 903. Amend.).
3. Miscellaneous site structures, pools, spas, fences, site walls, retaining walls, and gas storage tanks may require separate permits.
4. All exits to be operable from the inside without the use of a key or special knowledge. (310.1.4)
5. Doors leading into house from garage shall be 20 minute rated or equal, self-closing, self-latching. (R302.5.1 *Amend*.).
6. Exterior wall penetrations by pipes, ducts or conduits shall be caulked. (R307.6)
7. Lumber shall bear an approved grading stamp (R502.1).
8. Bottom wood sill plates shall be pressure treated or equal. Exterior wall bottom sill plates shall bear/extend minimum 6 inches above finish grade. (R317.1, No. 3).
9. When structural plans are not sealed by registered design professional, provide engineered truss designs for all prefabricated trusses for review and approval by the City of Scottsdale. (R802.10.1).
10. Fire blocking shall comply with (R602.8).
11. Masonry Bed and head joints…shall be 3/8 inch-thick, the thickness of the bed joint of the starting course placed over foundations shall not be less than 1/4 inch and not more than ¾ inch. Mortar joint thickness shall be within the following tolerances from the specified dimensions: 1. Bed joint: + 1/8 inch. 2. Head joint: 1/4 inch + 3/8 inch. 3. Collar joints: 1/4 inch + 3/8 inch. (R607.2.1).
12. Windows located more than 72" above finished grade shall have the lowest part of clear opening of the window to be minimum 24 inches above the floor in which it serves. (R312.2.1).
13. Gypsum board applied to a ceiling shall be 1/2" when framing members are 16" o.c. or 5/8" when framing members are 24" o.c. or use labeled **1/2" sag-resistant gypsum ceiling board**. Table R702.3.5 (d).
14. Showers and tub-shower combinations shall be provided with individual control valves of the pressure balance or thermostatic mixing valve type. (P2708.3).
15. Shower area walls shall be finished with a smooth, hard non-absorbent surface, such as ceramic tile, to a height of not less than 72 inches above the drain inlet. **Water-resistant gypsum board** shall not be installed over a vapor retarder in a shower or tub compartment. Cement, fiber-cement or glass mat gypsum backers installed in accordance with mfgrs' recommendations shall be used as backers for wall tile in tub and shower areas and wall panels in shower areas (R702.4.2).
16. Plumbing fixtures shall comply with the following conservation requirements: Water closets-Tank type 1.6 gal. /flush. Shower heads- 2.5 gal. /minute. Faucets- 2.2 gal. /minute, provide aerator. (Table P2903.2.).
17. Water treatment systems- shall be equipped with an automatic or readily accessible manual shutoff to prevent continuous flow when not in use. (N1103.4.1).
18. Domestic dishwashing machines connected to a disposer shall have the discharge installed as high as possible. (P2717.3).
19. Storage-tank type water heaters shall be installed with a drain pan and drain line. (P2801.5.1-.2).
20. The hot water circulating system shall be equipped with an automatic or readily accessible manual on switch and a temperature sensor activated shut-off that can automatically turn off the hot-water circulating pump when the set temperature is reached. N1103.4.1 amended.
21. Provide roof/attic ventilation unless insulation is applied directly to underside of roof sheathing or the dimension is 24 inches or less between the ceiling and bottom of roof sheathing. (R806.1 Amended).
22. Energy compliance shall be demonstrated by a passing REScheck energy compliance score. (N1101.2).

23. Provide Minimum R-3 insulation on hot water pipes. (N1103.4).
24. Supply and return ducts shall be insulated to a minimum **R-8**. Ducts in floor trusses, minimum R-6. (N1103.2.1).
25. Registers, diffusers and grilles shall be mechanically fastened to rigid supports or structural members on at least two opposite sides in addition to being connected to the ductwork they serve.
26. Dryer exhaust ducts shall conform to the requirements of Sections (M1502.4.5 amended), M1502.4.1 thru M1502.4.6.
27. Exhaust air from kitchens, bathrooms and toilet rooms shall not be re-circulated within a residence or to another dwelling unit, shall not discharge into an attic and/or crawl space and shall be exhausted directly to the outdoors. (M1507.2).
28. Electrical fixtures located in damp or wet locations shall be "listed" to be suitable for such location. (E4003.9).
29. Provide a wall mounted GFCI protected receptacle outlet within 36" of a bathroom or powder room lavatory. (E3901.6).
30. 15- and 20-ampere receptacles installed in bathrooms, garages and grade-level portions of unfinished accessory buildings used for storage or work areas, and installed outdoors shall have **GFCI** protection for personnel. (E3902.1-.3).
31. All branch circuits that supply 15- and 20-ampere outlets installed in family rooms, dining rooms, living rooms, parlors, libraries, dens, bedrooms, sunrooms, recreations rooms, closets, hallways and similar rooms or areas shall be protected by a combination type arc-fault circuit interrupter **(AFCI)** installed to provide protection of the branch circuit. (E3902.12).
32. In areas specified in Section E3901.1, 15- and 20-ampere receptacles shall be listed **tamper-resistant.** (E4002.14).
33. Provide **Smoke Alarms** in new and existing areas of home. (R314).
34. Approved **carbon monoxide alarms** shall be installed outside of each separate sleeping area in the immediate vicinity of the bedrooms in dwelling units within which fuel-fired appliances are installed and in dwelling units that have attached garages. (R315).
35. Provide a switch for the stairway when there are 6 or more risers. (R303.7.1).
36. Receptacle outlets shall be installed so that no point along the floor line in any wall space is more than 6 feet, measured horizontally, from an outlet in that space, including any wall space 2 feet or more in width. (E3901).
37. Provide a minimum of two 20-amp small appliance branch circuits for the kitchen/dining/breakfast. (E3703.2).
38. Provide a concrete encased grounding electrode of not less than 20 feet of #4 bare copper. (E3608.1.2).
39. Provide bonding to the water piping, gas and metal building systems. (E3606.9, E3609.7).
40. All metal piping systems, metal parts of electrical equipment, and pump motors associated with the hydro massage tub shall be bonded together using a copper bonding jumper, insulated, covered, or bare, not smaller than No. 8 solid. (E4209).
41. A minimum of 75 percent of the lamps in permanently installed lighting fixtures shall be high-efficacy lamps or a minimum of 75 percent of the permanently installed lighting fixtures shall contain only high-efficacy lamps. (N1104.1).
42. Recessed luminaires installed in the building thermal envelope shall be IC-rated, labeled with air leakage rate not more than 2.0 cfm... sealed with a gasket or caulk between the housing and the interior wall or ceiling covering. (N1102.4.4).
43. Provide outside combustion air to all indoor fireplaces, with air intake located not higher than the firebox. (R1006.2).
44. Where a listed decorative appliance is installed, the fireplace damper shall be afixed open and shall comply with the listed decorative appliance manufacture's installation instructions. (G2434, G2435, G2453.1).
45. At least one thermostat shall be provided for each separate heating and cooling system. (N1103.1).
46. The building shall be provided with ventilation that meets the requirements of Section M1507 or with other approved means of ventilation. Outdoor air intakes and exhausts shall have automatic or gravity dampers that close when the ventilation system is not operating. (N1103.5).
47. The building or dwelling unit shall be tested and verified as having an air leakage rate of not exceeding 5 air changes per hour. Testing shall be conducted with a blower door at a pressure of 0.2 inches w.g. (50 Pascals). Testing shall be conducted by an approved third party. A written report of the results of the test shall be signed by the party conducting the test and provided to the building official. Testing shall be performed at any time after creation of all penetrations of the building thermal envelope. (N1102.4.1.2).
48. Ducts, air handlers, and filter boxes shall be sealed. Joints and seams shall comply with Section M1601.4.1, (N1103.2.2). Duct tightness shall be verified by either of the following:
    1. Post-construction test: Total leakage shall be less than or equal to 4 cfm per 100 square feet of conditioned floor area when tested at a pressure differential of 0.1 inches w.g. (25 Pa) across the entire system, including the manufacturer's air handler enclosure. All register boots shall be taped or otherwise sealed during the test.
    2. Rough-in test: Total leakage shall be less than or equal to 4 cfm per 100 ft2 of conditioned floor area when tested at a pressure differential of 0.1 inches w.g. (25 Pa) across the system, including the manufacturer's air handler enclosure. All registers shall be taped or otherwise sealed during the test. If the air handler is not installed at the time of the test, total leakage shall be less than or equal to 3 cfm per 100 square feet of conditioned floor area.

City of Scottsdale
Single Family Engineering Checklist

THE ITEMS ON THIS CHECKLIST ARE THE MINIMUM REQUIREMENTS FOR A SINGLE FAMILY PLAN SUBMITTAL. ALL PLANS ARE UNIQUE. THE PLAN REVIEWER MAY REQUIRE ADDITIONAL INFORMATION. (REVISED 2/4/00)

1) Plan sheet size 24” x 36” only
2) Scale
   a) Written
   b) Graphic
3) Acceptable Plan Scales
   a) 1”=10’
   b) 1”=20’
   c) 1/8”=1’
4) Vicinity Map
   a) North arrow
   b) 2 major cross streets
5) North arrow orientation to top or right-hand side of sheet
6) Legal Description
   a) Subdivision (Maricopa County Record (MCR) Number, Book, Page)
   b) Metes and Bounds (full legal description)
   c) Assessor’s Parcel Number (APN)
7) Site address
8) City of Scottsdale Quarter Section Number
9) Parcel Zoning
10) Name, address, and phone number for
   a) Owner
   b) Designer or Architect
   c) Engineer
11) Legend
   a) Symbols
   b) Abbreviations
12) Blue Stake Note
13) a) Show closest Benchmark per City of Scottsdale Database http://www.ci.scottsdale.az.us/inspections/hv_search.asp *Benchmarks that are not on the list will not be accepted by Project Review.*
   b) Provide benchmark certification statement on the plans.
14) Lot dimensions and bearings, adjacent Lot numbers, tracts
15) Show all existing
   a) Right of Ways
   b) Easements
16) Show all proposed
   a) Right of Ways
   b) Easements
   c) Provide legal description
   d) Provide legal graphic
   e) Provide signed and notarized dedication form(s)
   f) Title report dated within 3 months
   g) Consent to easement form, signed and notarized
17) Flood Zone Information
   a) FEMA block (on ALL plans)
   b) Engineer’s Certification Statement (if any lowest floor elevations are being set by the plan).
18) Seal, signature, and date on all sheets provided by an Arizona registered
   a) Civil Engineer for grading and drainage plans
   b) Architect for site plans where major grading, pad elevations, and lowest floor elevations were set previously by a subdivision grading and drainage plan.
19) Show existing topography
   a) Show 2’ minimum interval contours for lots with more than 2’ of fall across lot
   b) Show top of curb, back of curb, or edge of road elevations at lot corners for lots with less than 2’ of fall across lot
20) Show proposed grading on all plans (**pre-graded lots still require fine grading**)
   a) Flow lines
   b) Slopes
   c) Breakpoints
   d) Positive drainage away from structures, (5% min. for 10 feet)
21) Show lowest floor elevations for all areas of all structures.
   a) For subdivisions with grading and drainage plans for lots, the elevations have been approved on the subdivision plan.
   b) For custom lots or metes and bounds, must be set and certified by a Civil engineer or Architect.
   c) List as $L.F._{88}$ for lowest floor in relation to the 1988 North America Datum (NAD 88)
22) Drainage report required for
   a) Metes and Bounds properties

b) Special drainage features on the lot (pipes, culverts, channels)
c) Grading in a wash
d) Areas where no drainage study has been done
e) Verification of Q 100 shown on the plans. Provide calculations.
f) Other

_____

23) Show the following drainage information on the plan
   a) Show Q_{100} (flow rate) and ν_{100} (velocity) for all channels entering and leaving the lot.
   b) Velocities over 5fps require that the channels be protected from erosion
   c) Show washes dedicated as Drainage Easements.
      i) Washes with >50 cfs capacity and north of the Central Arizona Project canal
      ii) Washes with >25 cfs capacity and south of the Central Arizona Project canal
   d) Use arrows to show lot drainage direction on entire parcel for lots less than 2.5 acres IN ADDITION to contours or topography
   e) Show cross sections for drainage ways
      i) Dimension to footings, walls, structures
      ii) Show proposed and existing 100 year high water elevation (HWE)
      iii) To show clearly how to construct this feature
   f) Show weep holes or drainage openings in walls
24) Complete and submit Section 404 Certification Form
   a) To be signed by engineer if plan is prepared by an engineer
   b) To be signed by owner if plan is not prepared by an engineer
25) Water and sewer mains
   a) Show and label existing mains with size and location
   b) Show and label proposed mains with size and location
      i) To be reviewed and approved by a separate Civil Review plan (show cross referenced plan review number on SFR plan)
26) Water and sewer service
   a) For existing water meter and sewer tap show, label and dimension to lot corner
   b) For proposed water meter and sewer tap show, label and dimension to lot corner, call out MAG installation details
27) Show manholes with rim elevations
   a) Upstream from sewer tap
      i) If rim elevation is higher than lowest floor elevation, a backwater device is required on the sewer service line.
   b) Downstream from sewer tap
28) Show location of septic system, leach fields, and other facilities
   a) To be located 50' away from top of bank of any drainage way/drainage easements
   b) To be located in front or to side of lot for future connection to sewer
   c) May not be located within Natural Area Open Space (NAOS) area.
   d) Must submit approval page from Maricopa County Health Department
   e) Note on plan: *Septic System Per Maricopa County Health Department Permit # X.*
29) Show and dimension to nearest fire hydrant in all cases.
30) Driveways
   a) Show and label 50' minimum distance from centerline to centerline for return-type driveways
   b) Show and label 50' minimum distance from centerline of driveway to projected right-of-way line (applies to lots at corners and "T" intersections)
   c) Show and label 5' minimum from edge of driveway to property line at right-of-way
   d) Driveways greater than 150' in length require a special turnaround for fire trucks or approval from Rural Metro
   e) Maximum slope on driveways is 12%
   f) Maximum width at right-of-way is 16' for
      i) all front entry garages with a setback greater than 40'
      ii) all side entry garages
   g) Maximum driveway width at right-of-way is 24' for
      i) 2 car front entry garages with a setback between 20' and 40'

ii) 3 car front entry garages with a setback between 30’ and 40’

h) Maximum driveway width at right-of-way is 30’ for

i) 3 car front entry garage with a setback between 20’ and 30’

31) Walls

1. Retaining walls

a) Submit structural calculations, specs /wall detail if retaining 3 feet or more. Show construction dimensions and steel size.

b) Show cross section with adjacent topography and drainage features

c) Show Top of Wall and top of footing elevations

d) Show pool retaining wall calcs and details if different than other walls. Clearly show which walls are to be constructed in each case.

e) Provide a copy of the soils report.

f) Provide a copy of a letter from the soils engineer stating that storm water may flow/be retained against the wall.

g) Please use the original approved plan showing new walls with delta and clouds.

2. Fence walls

a) Show all fence walls clearly. (Note: Fence walls cannot be built on-site in Scottsdale without drainage review and proper permitting.)

32) Slope Stability

a) Submit soils report for slopes greater than 4:1

b) Show, label and provide detail/callout for erosion protection

33) When submitting a plan for re-approval

a) “Cloud” area where revision is on the plan

b) Use a delta symbol to label the revision number and describe the revision

Water Meter Size Calculations

Single-Family Residential

Plan Check No.: _____ **Date:** _____

To determine your water meter fee, your water development fee and your sewer connection fee, we must know the size of the water meter required for your residence. To determine the correct size, please provide the following essential information. **This does NOT permit the violation of any section of any federal, state or local regulations.**

1) Total number of fixture units of all water-using outlets is:

Type of Fixture	Fixture Unit Value		Number of Fixtures		Total Fixture Units
Bidet	2	x	_____	=	_____
Bathtub (with/without overhead shower head)	1.4	x	_____	=	_____
Clothes washer	1.4	x	_____	=	_____
Dishwasher	1.4	x	_____	=	_____
Full-bath group with bathtub (with/without shower head) or shower stall	3.6	x	_____	=	_____
Half-bath group (water closet and lavatory)	2.6	x	_____	=	_____
Hose bibb (sillcock)	2.5	x	_____	=	_____
Kitchen group (dishwasher and sink with/without garbage grinder)	2.5	x	_____	=	_____
Kitchen sink	1.4	x	_____	=	_____
Laundry group (clothes washer standpipe and laundry tub)	2.5	x	_____	=	_____
Laundry tub	1.4	x	_____	=	_____
Lavatory	0.7	x	_____	=	_____
Shower stall	1.4	x	_____	=	_____
Water closet (tank type)	2.2	x	_____	=	_____
*Other	_____	x	_____	=	_____
			Total	=	_____

**Water supply outlets for items not listed above shall be computed at their maximum demand or according to the size of the supply pipe as indicated in the International Plumbing Code; whichever is greater.*

2) Total length of the water line from the water meter to the farthest water-using outlet/fixture is: _____ lineal feet.
3) Local water service pressure is _____ pounds per square inch (psi).

Please Note:

- It is your responsibility to obtain a water pressure field test at your site or as near to your site as possible. Your building permit **cannot be issued** until you have done so.
- An approved type pressure regulator preceded by an adequate strainer shall be installed and the pressure reduced to 80 psi or less.

Owner/Agent: _____

Phone: _____ Fax: _____

E-mail: _____

Signature: **Date:**

To Be completed by Plan Reviewer

Size of Meter: _____

Size of Building Supply: _____

When approved by the City of Scottsdale, the Applicant must deliver a copy of this form, or the City approved plans, to the Fire Sprinkler Designer to use in the calculation of the fire sprinkler system.
Verification of the Meter size must accompany Fire Sprinkler plans submitted for review.

Planning & Development Services

7447 E Indian School Road, Suite 105, Scottsdale, AZ 85251 ◆ Phone: 480-312-7000 ◆ Fax: 480-312-7088

Soils Testing Requirement

Request for Waiver of Requirement

This certificate may be used in lieu of providing soils reports for single-family residences.

This does NOT permit the violation of any section of the Scottsdale Building Code or any federal, state or local regulations.

Project Name: _____ Plan Check No.: _____

Address: _____ Zip Code: _____

To be completed and signed by OWNER before a building permit is issued.

I, _____ (owner name – please print), hereby request waiver of the requirement that the City of Scottsdale be provided with a soil test report specifying bearing soil capacities and classifications of soil for my prospective building lot / site.

I hereby certify the following:

All footings, including isolated column footings shall be located with their bearing at eighteen inches (18") minimum below lowest adjacent undisturbed soil or engineer certified compacted grade within 5'-0" and shall be:

a.) **Provided with** a minimum effective soil bearing capacity of one thousand five hundred pounds per square foot (1500 psf).

b.) **Designed for** a maximum effective bearing pressure of one thousand five hundred pounds per square foot (1500 psf).

Furthermore, the City of Scottsdale, Arizona, will be held harmless for any damage resulting from insufficient bearing pressure, expansive soil or any other soil problems.

_____ _____

Owners Signature **Date**

If submitted by owner's agent, list title and relationship to project and furnish a letter signed by owner authorizing you as agent.

Planning & Development Services

7447 E Indian School Road, Suite 125, Scottsdale, AZ 85251 ◆ Phone: 480-312-7080 ◆ Fax: 480-312-7781

Section 404 Certification

Before the City issues development permits for a project, the developer's Engineer or the property owner must certify that it complies with, or is exempt from, Section 404 of the Clean Water Act of the United States. Section 404, administered by the U.S. Army Corps of Engineers (COE), regulates the discharge of dredged or fill material into a wetland, lake, (including dry lakes), river, stream (including intermittent streams, ephemeral washes, and arroyos), or other waters of the United States.

Prior to submittal of improvement plans to Project Review the form below must be completed (and submitted with the improvement plans) as evidence of compliance

Certification of Section 404 Permit Status

Owner's Name: _____ Phone No. _____

Project Name/Description: _____ Case No. _____

Project Location/Address: _____

A registered Engineer or the property Owner must check the applicable condition and certify by signing below that:

1. Section 404 <u>does</u> apply to the project because there will be a discharge of dredged or fill material to waters of the U.S., and:

☐ A Section 404 Permit has already been obtained for this project.

-or-

☐ This project qualifies for a "Nationwide Permit," and this project will meet all terms and conditions of the applicable nationwide permit.

2. Section 404 <u>does not</u> apply to the project because:

☐ No watercourses or other waters of the U.S. exist on the property.

☐ No jurisdictional waters of the U.S. exist on the property. Attached is a copy of the COE's Jurisdictional Determination.

☐ Watercourses or other waters of the U.S. do exist on the property, but the project will not involve the discharge of dredged or fill material into any of these waters.

I certify that the above statement is true.

_____ _____

Engineer's Signature and Seal, or Owner's Signature Date

_____

Title Company

Planning & Development Services

7447 E Indian School Road, Suite 100, Scottsdale, AZ 85251 ◆ Phone: 480-312-2500 ◆ Fax: 480-312-7088

- THIS DETAIL SHALL APPLY TO WALLS 6'-0" OR LESS IN HEIGHT.
- SEPARATE APPROVAL BY THE PLANNING DEPARTMENT IS REQUIRED.
- SEPARATE APPROVAL BY THE STORMWATER DEPARTMENT IS REQUIRED.
- INDICATE DRAIN BLOCKS AT FINISH GRADE, AS REQUIRED, ON FINAL PLANS.

- THE CITY OF SCOTTSDALE MAKES NO REPRESENTATIONS AND ASSUMES NO RESPONSIBILITY OR LIABILITY IN PROVIDING THIS STANDARD DETAIL. OWNERS/APPLICANTS AND PROFESSIONALS USING THIS DETAIL SHALL ASSUME FULL RESPONSIBILITY FOR ITS DESIGN.
- OWNERS/APPLICANTS ARE ENCOURAGED TO CONSULT WITH A PROFESSIONAL ENGINEER OR ARCHITECT LICENSED BY THE STATE OF ARIZONA REGARDING THE NEEDS FOR THEIR PROJECT. AN ENGINEER OR ARCHITECT LICENSED BY THE STATE OF ARIZONA COULD DETERMINE DIFFERENT DETAILS OR SPECIFICATIONS.
- OWNER/APPLICANT/BUILDER IS RESPONSIBLE FOR VERIFYING SOIL CONDITIONS AT THE FOOTING'S BEARING SURFACE AND IS SOLELY RESPONSIBLE FOR THE PERFORMANCE OF FOOTING.

4" MASONRY WALL

"DOOLEY WALL"

MATERIALS

CMU: f'm = 1500 psi
NORMAL WEIGHT

MORTAR: ASTM TYPE S

GROUT: f'c = 2000 psi

REINFORCING: fy = 40,000psi

CONCRETE: 2500psi

HORIZONTAL JOINT REINFORCEMENT: fy = 80,000psi

WALL DESIGN OPTIONS

OPTION	L	Sv	d
A	9'-4"	8"	4'
B	8'-0"	16"	3'-6"

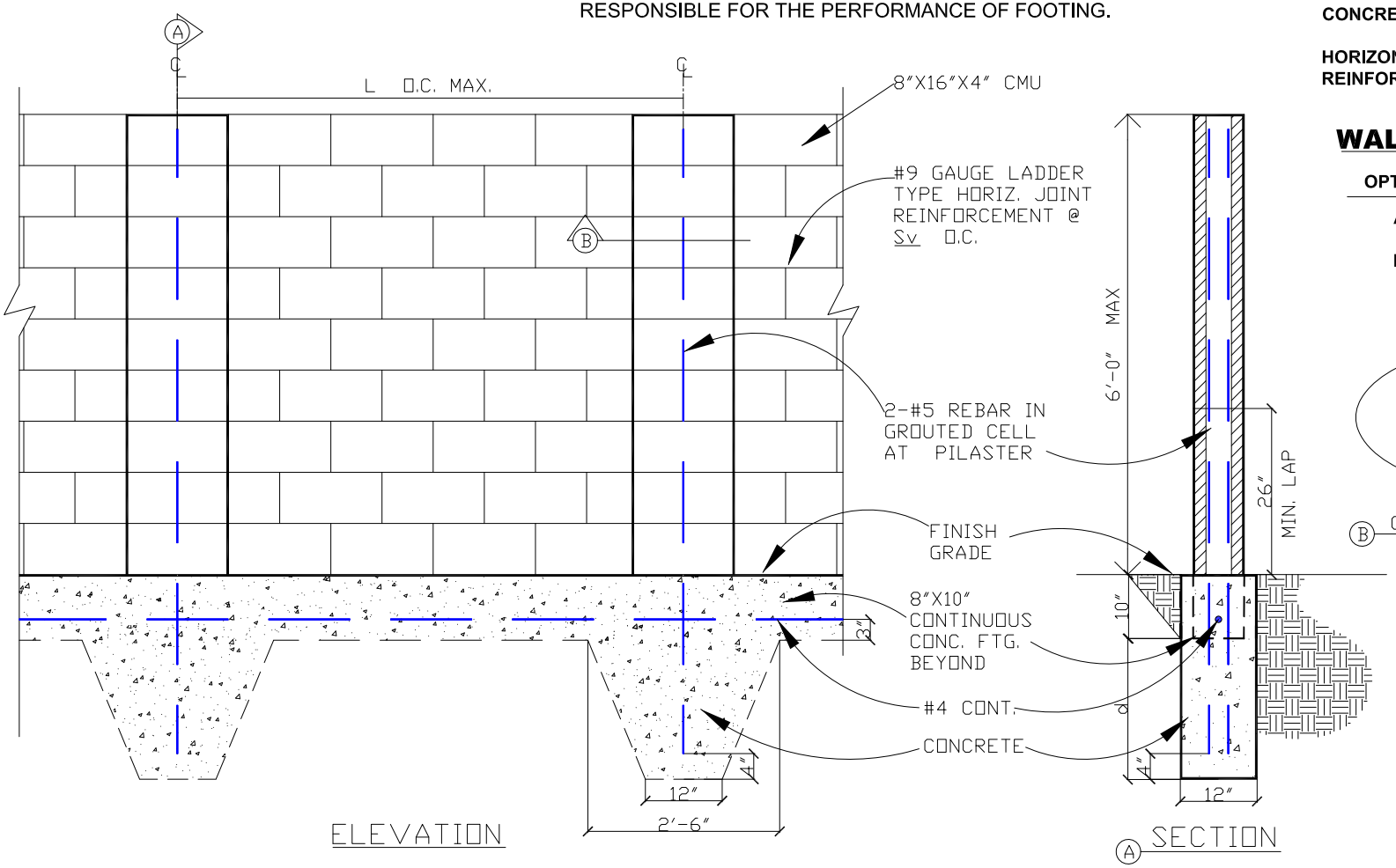

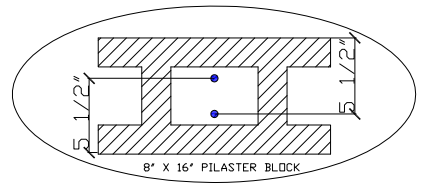

B CROSS SECTION AT PILASTER

Revised:
6/1/2009

CITY OF SCOTTSDALE MINIMUM STANDARD

- THIS DETAIL SHALL APPLY TO WALLS 6'-0" OR LESS IN HEIGHT.
- SEPARATE APPROVAL BY THE PLANNING DEPARTMENT IS REQUIRED.
- SEPARATE APPROVAL BY THE STORMWATER DEPARTMENT IS REQUIRED.
- INDICATE DRAIN BLOCKS AT FINISH GRADE, AS REQUIRED, ON FINAL PLANS.

- THE CITY OF SCOTTSDALE MAKES NO REPRESENTATIONS AND ASSUMES NO RESPONSIBILITY OR LIABILITY IN PROVIDING THIS STANDARD DETAIL. OWNERS/APPLICANTS AND PROFESSIONALS USING THIS DETAIL SHALL ASSUME FULL RESPONSIBILITY FOR ITS DESIGN.
- OWNERS/APPLICANTS ARE ENCOURAGED TO CONSULT WITH A PROFESSIONAL ENGINEER OR ARCHITECT LICENSED BY THE STATE OF ARIZONA REGARDING THE NEEDS FOR THEIR PROJECT. AN ENGINEER OR ARCHITECT LICENSED BY THE STATE OF ARIZONA COULD DETERMINE DIFFERENT DETAILS OR SPECIFICATIONS.
- OWNER/APPLICANT/BUILDER IS RESPONSIBLE FOR VERIFYING SOIL CONDITIONS AT THE FOOTING'S BEARING SURFACE AND IS SOLELY RESPONSIBLE FOR THE PERFORMANCE OF FOOTING.

6" MASONRY WALL

PER 2006 IBC

WIND LOAD: 15 psf per ASCE 7-05

CMU: f'm = 1350 psi

MORTAR: ASTM TYPE S

GROUT: f'c = 2000 psi

REINFORCING: f'y = 40,000psi

CONCRETE: 2000psi

LADDER REINFORCING: f'y = 80,000 psi

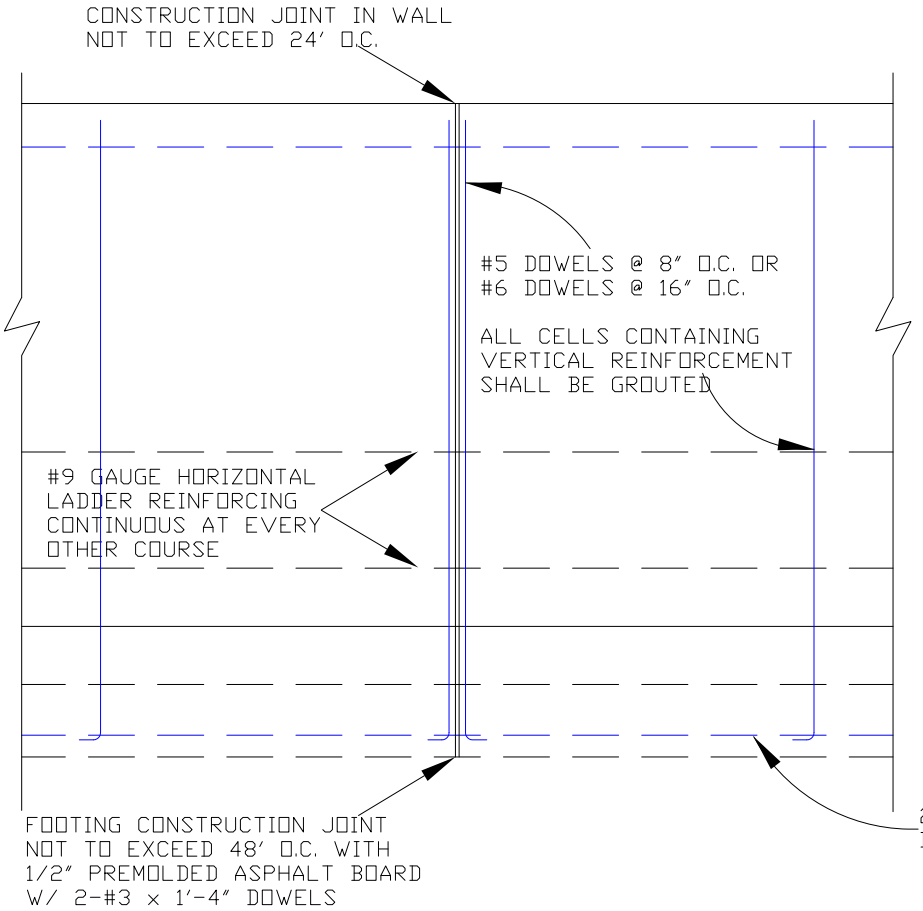

ELEVATION

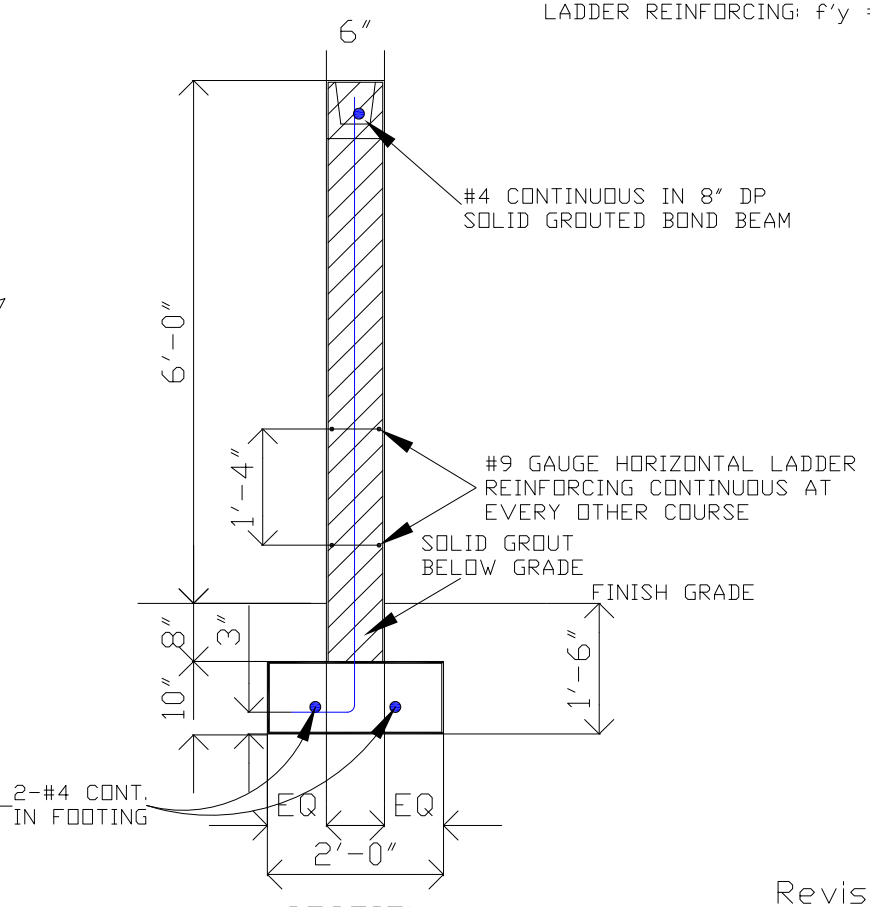

SECTION

Revised:
2/17/2009

CITY OF SCOTTSDALE MINIMUM STANDARD

8" MASONRY WALL

PER 2006 IBC

- THIS DETAIL SHALL APPLY TO WALLS 6'-0" OR LESS IN HEIGHT.
- SEPARATE APPROVAL BY THE PLANNING DEPARTMENT IS REQUIRED.
- SEPARATE APPROVAL BY THE STORMWATER DEPARTMENT IS REQUIRED.
- INDICATE DRAIN BLOCKS AT FINISH GRADE, AS REQUIRED, ON FINAL PLANS.

- THE CITY OF SCOTTSDALE MAKES NO REPRESENTATIONS AND ASSUMES NO RESPONSIBILITY OR LIABILITY IN PROVIDING THIS STANDARD DETAIL. OWNERS/APPLICANTS AND PROFESSIONALS USING THIS DETAIL SHALL ASSUME FULL RESPONSIBILITY FOR ITS DESIGN.
- OWNERS/APPLICANTS ARE ENCOURAGED TO CONSULT WITH A PROFESSIONAL ENGINEER OR ARCHITECT LICENSED BY THE STATE OF ARIZONA REGARDING THE NEEDS FOR THEIR PROJECT. AN ENGINEER OR ARCHITECT LICENSED BY THE STATE OF ARIZONA COULD DETERMINE DIFFERENT DETAILS OR SPECIFICATIONS.
- OWNER/APPLICANT/BUILDER IS RESPONSIBLE FOR VERIFYING SOIL CONDITIONS AT THE FOOTING'S BEARING SURFACE AND IS SOLELY RESPONSIBLE FOR THE PERFORMANCE OF FOOTING.

WIND LOAD: 15 psf per ASCE 7-05

CMU: f'm = 1350 psi

MORTAR: ASTM TYPE S

GROUT: f'c = 2000 psi

REINFORCING: f'y = 40,000psi

CONCRETE: 2000psi

LADDER REINFORCING: f'y = 80,000 psi

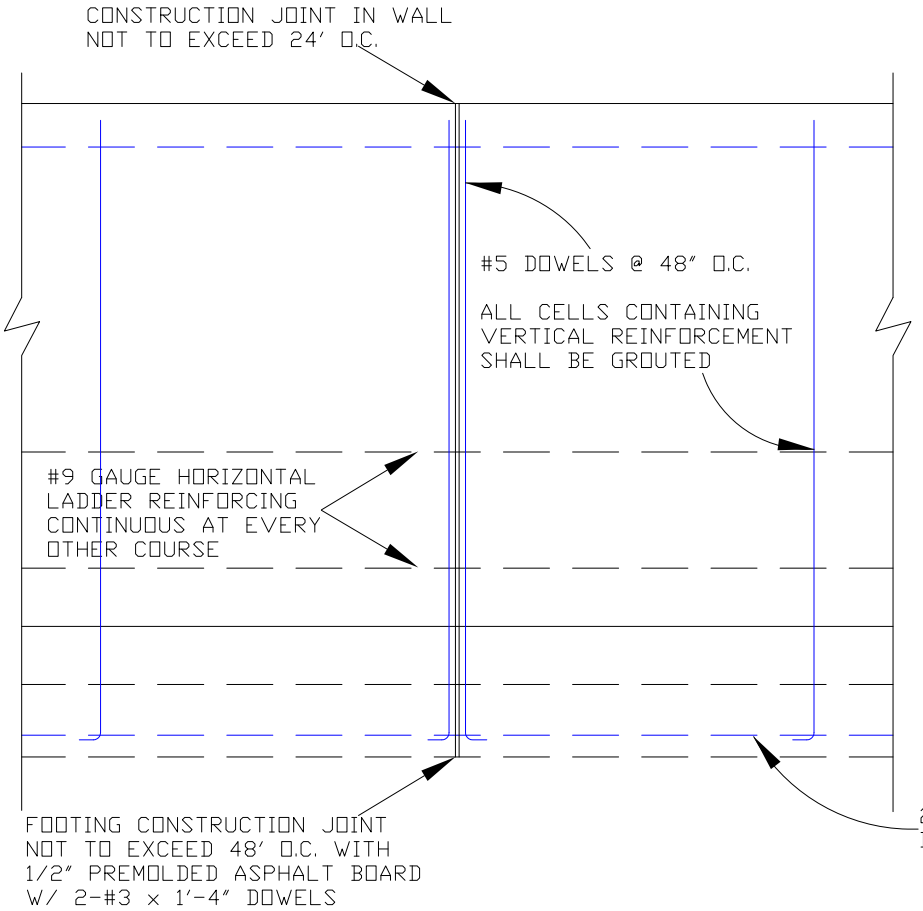

ELEVATION

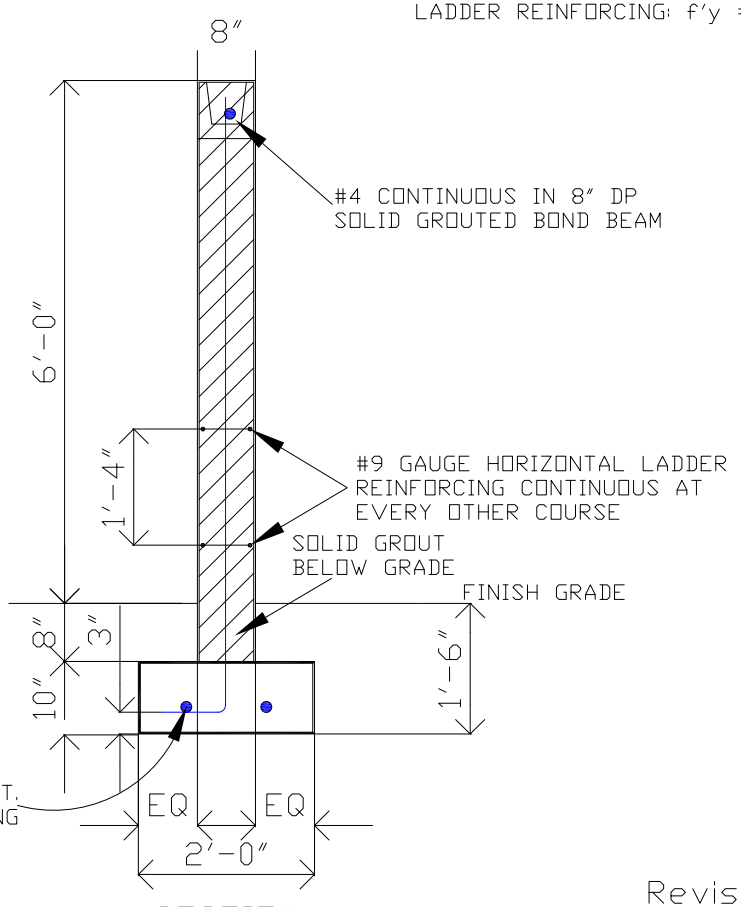

SECTION

Revised:
2/17/2009

CITY OF SCOTTSDALE MINIMUM STANDARD

Fence/Wall Site Plan Exhibit

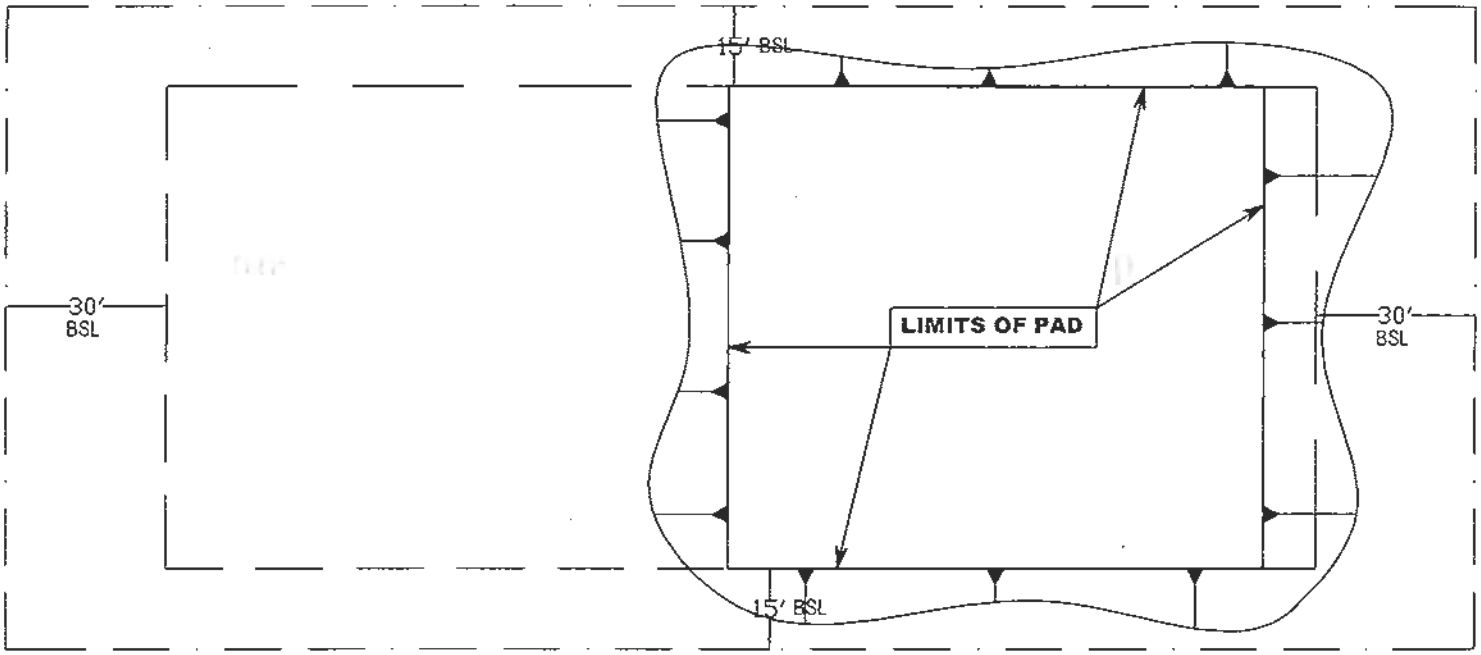

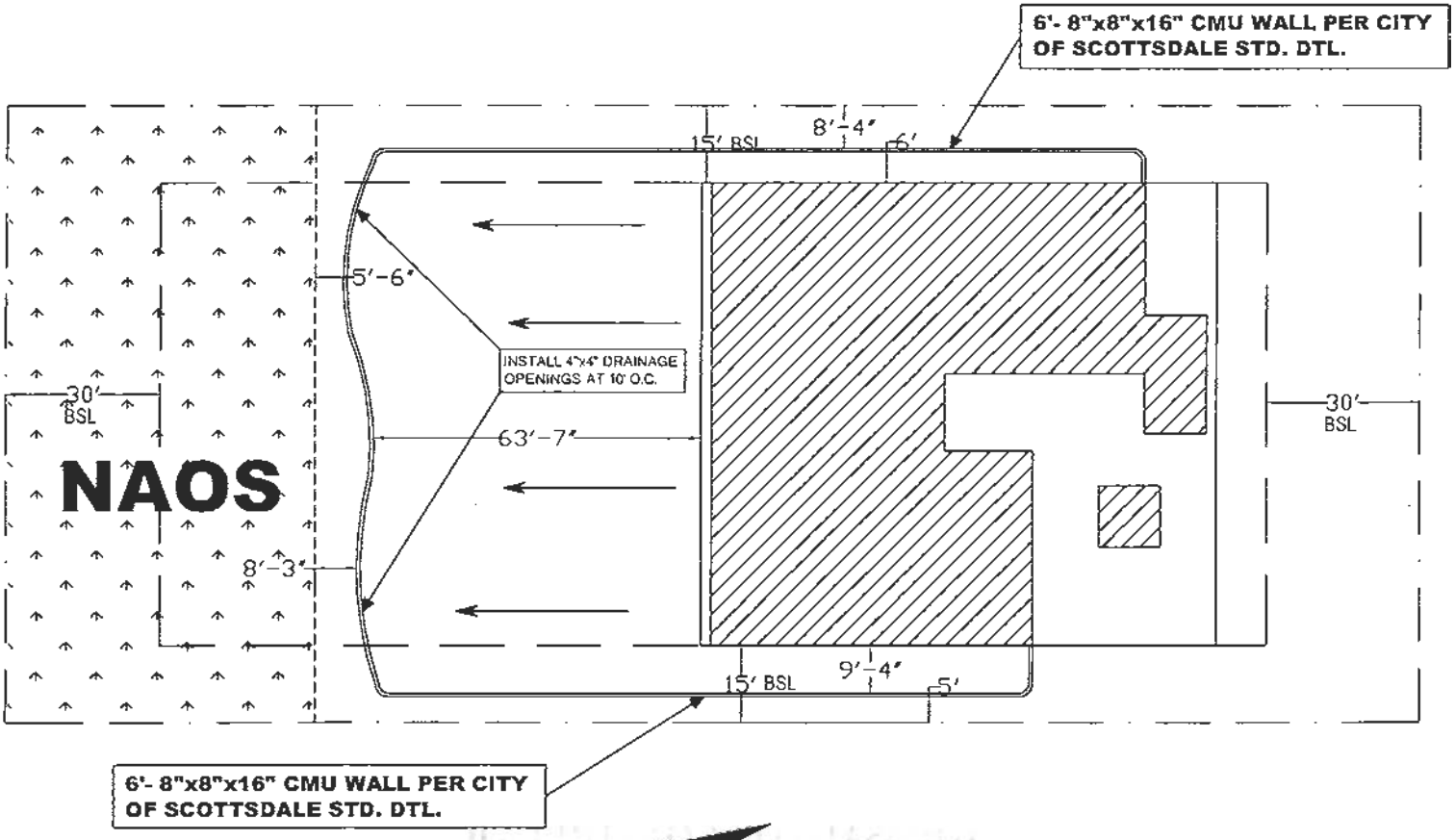

BSL = Building Setback Line

Sample Roof Over Topography Plan

(for ESL areas and when applicable)

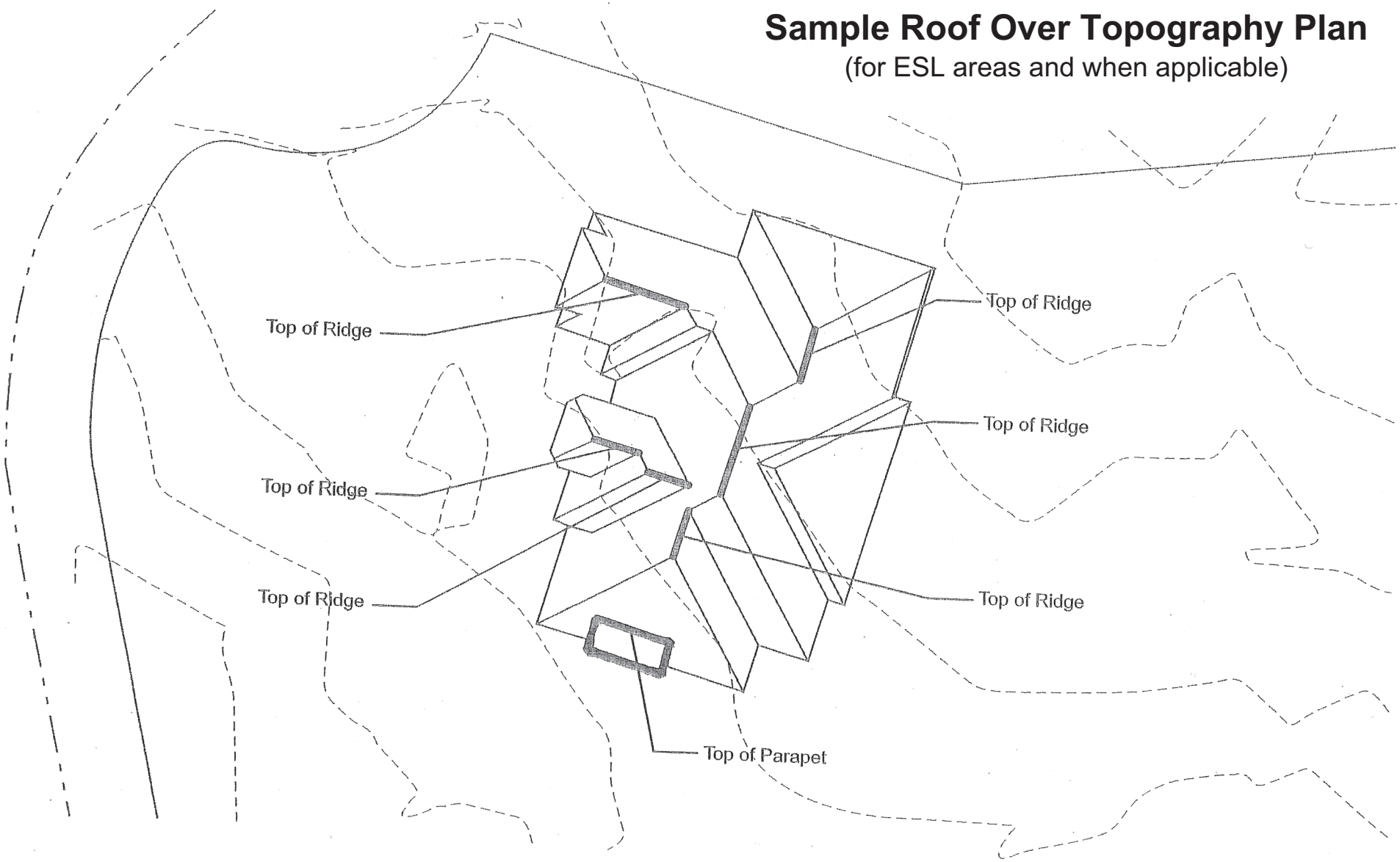

Call out LF88.
Call out all roof elevations (ridge, parapet, chimney, etc.) at 88datum.

Height will be calculated from the pre-disturbed natural grade by determining the difference between the roof elevations and the contour lines directly below them.

SINGLE FAMILY VALUATION/
FIRE SPRINKLER WORKSHEET 2001.1

Job Address:

	USE	SQ. FT.		VALUE			VALUATION*
	EXISTING NON-SPRINKLED BUILDING						
A	LIVABLE / CONDITIONED AREA		X	110.29		=	
	BASEMENT - UNFINISHED		X	42.48		=	
					TOTAL A	=	
B	GARAGE		X	42.48		=	
	CARPORT		X	42.48		=	
	COVERED PATIO		X	42.48		=	
					TOTAL B	=	
C	**TOTAL EXISTING VALUE, (A+B)**				**TOTAL C**	=	
D	**FACTORED EXISTING VALUE**		X	**25%**	**TOTAL D**	=	
	NEW CONSTRUCTION/ADDITION						
E	LIVABLE / CONDITIONED AREA		X	110.29		=	
	BASEMENT - UNFINISHED		X	42.48		=	
					TOTAL E	=	
F	GARAGE		X	42.48		=	
	CARPORT		X	42.48		=	
	COVERED PATIO		X	42.48		=	
					TOTAL F	=	
	REMODELED AREAS, includes work requiring permit per IRC 105.2 amended.						
G	LIVABLE / CONDITIONED AREA		X	110.29	X 30%	=	
	GARAGE		X	42.48	X 30%	=	
	CARPORT		X	42.48	X 30%	=	
	COVERED PATIO		X	42.48	X 30%	=	
	BASEMENT - UNFINISHED		X	42.48	X 30%	=	
					TOTAL G	=	
H	**TOTAL NEW AND REMODEL, (E+F+G)**				**TOTAL H**	=	

IF H >D FIRE SPRINKLERS WILL BE REQUIRED

IF TOTAL H >50% of TOTAL C

* Values per *http://www.iccsafe.org/cs/Pages/BVD.aspx, June, 2014* . revised 6/30/2014.

The scope of work and related square footages provided are subject to field verification. Where discrepancies are encountered by the inspector, work shall stop and a new worksheet shall be completed, inclusive of the entire known scope of work. Sprinklers shall be installed if indicated on the revised worksheet.

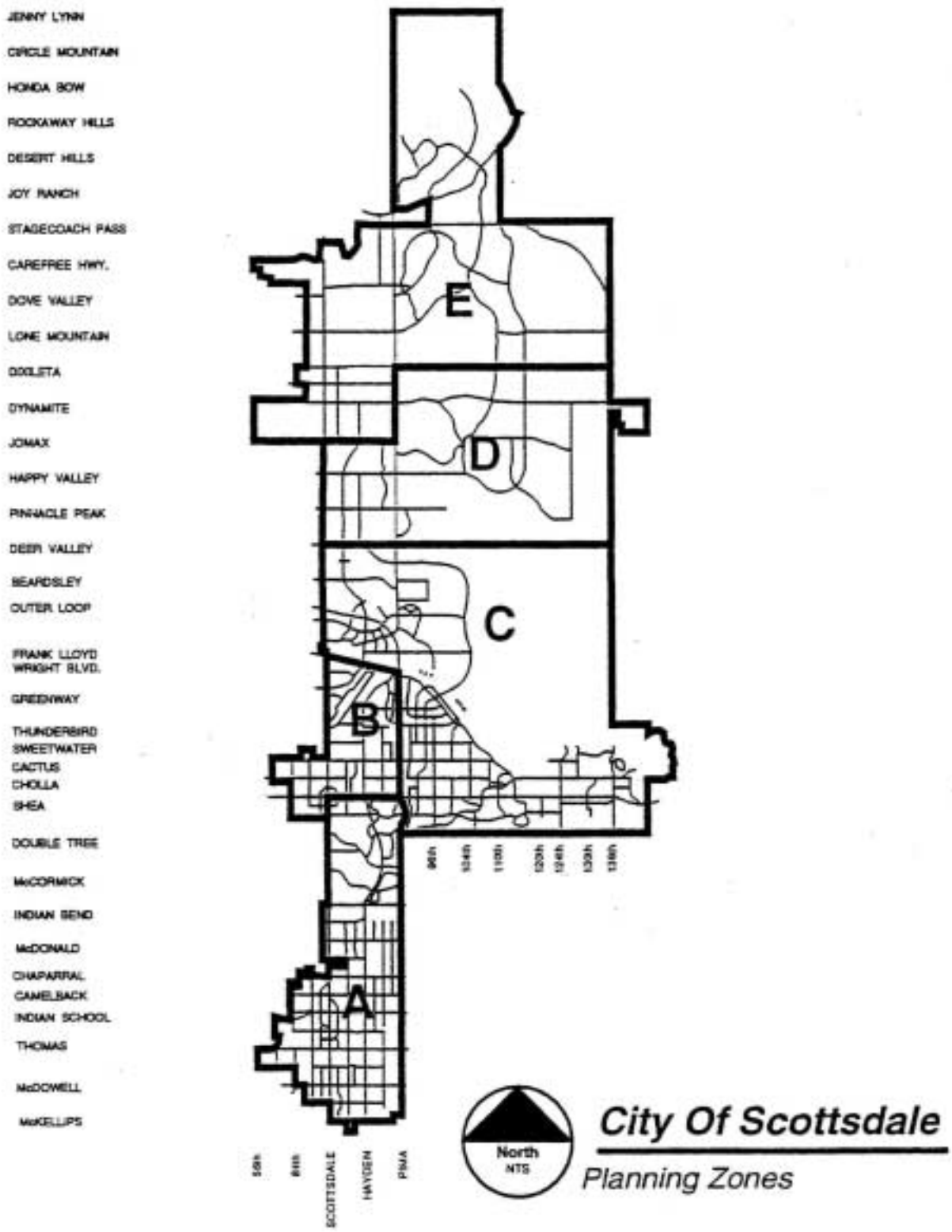
JENNY LYNN
CIRCLE MOUNTAIN
HONDA BOW
ROCKAWAY HILLS
DESERT HILLS
JOY RANCH
STAGECOACH PASS
CAREFREE HWY.
DOVE VALLEY
LONE MOUNTAIN
GOOLSTA
DYNAMITE
JOMAX
HAPPY VALLEY
PINNACLE PEAK
DEER VALLEY
BEARDSLEY
OUTER LOOP
FRANK LLOYD WRIGHT BLVD.
GREENWAY
THUNDERBIRD
SWEETWATER
CACTUS
CHOLLA
SHEA
DOUBLE TREE
McCORMICK
INDIAN BEND
McDONALD
CHAPARRAL
CAMELBACK
INDIAN SCHOOL
THOMAS
McDOWELL
McKELLIPS
E
D
C
B
A
96th
104th
110th
120th
124th
130th
136th
56th
64th
SCOTTSDALE
HAYDEN
PIMA
North
NTS
City Of Scottsdale
Planning Zones

Plan Review Fee Schedule

Single Family Residential

Official Schedule of City of Scottsdale Rates and Fees at: www.scottsdaleaz.gov - keyword "Fees".

Single Family Custom Homes

Livable area - with A/C	$0.33 Sq. Ft.
Covered area - non A/C	$0.18 Sq. Ft.
Fences	$0.12 Ln. Ft.
Retaining walls	$0.12 Ln. Ft.

Single Family Addition

Livable area - with A/C	$0.33 Sq. Ft.
Covered area - non A/C	$0.18 Sq. Ft.

Single Family Remodel

Livable area - with A/C	$0.33 Sq. Ft. x 30%

Single Family Standard Plan

Livable area - with A/C	$0.33 Sq. Ft.
Covered area - non A/C	$0.18 Sq. Ft.
Additional elevations (maximum 5)	$78 each

Engineering Site Review (per sheet as per ESL land form)

	Non / Lower	Upper	Hillside
Single Family Grading & Drainage Plan	$690	$730	$755

Miscellaneous Plan Reviews

Native plant	$78 per hour
Fence only	$78 per hour + $.12 LF
Retaining walls only	$78 per hour + $.12 LF
Revision to approved plan	$78 per hour
Revision to Civil Plan	$235 per sheet
Minimum review	$78 per hour
Benchmark Revision	$78 per hour

Note: This schedule is not all inclusive and other fees may apply.

Planning and Development

7447 E Indian School Road, Suite 100, Scottsdale, AZ 85251 ◆ Phone: 480-312-7000 ◆ Fax: 480-312-7088

Permit Fee Schedule

Single Family Residential

Official Schedule of City of Scottsdale Rates and Fees at: www.scottsdaleaz.gov - keyword "Fees".

Single Family Custom

Livable area with A/C	$.61 Sq Ft
Covered area non A/C	$.32 Sq Ft
Base Fee	$159
Certificate of Occupancy	$128
GIS Fee	$255
Lowest floor certificate review	$235

Single Family Addition

Livable area with A/C	$.61 Sq Ft
Covered area non A/C	$.32 Sq Ft
Base Fee	$159
Certificate of Occupancy	$128
GIS Fee	$255
Lowest floor certificate review	$235

Single Family Remodel

Livable area with A/C	$.61 Sq Ft x 30%
Covered area non A/C	$.32 Sq Ft
Base Fee	$159

Single Family Detached Structure

Livable area with A/C	$.61 Sq Ft
Covered area non A/C	$.32 Sq Ft
Base Fee	$159
Certificate of Occupancy	$128
GIS Fee	$255
Lowest floor certificate review	$235

Single Family Standard Plan

Livable area with A/C	$.61 Sq Ft
Covered area non A/C	$.32 Sq Ft
15% Admin Site Review Fee	Varies based on square footage
Certificate of Occupancy	$128
GIS Fee	$255
Lowest floor certificate review	$228
Base fee	$159

Fence Walls

Linear Footage	$.17 LF
Base Fee	$159

Retaining Walls

Linear Footage	$1.70 LF
Base Fee	$159

Note: This schedule is not all inclusive and other fees may apply.

Planning and Development

7447 E Indian School Road, Suite 100, Scottsdale, AZ 85251 ◆ Phone: 480-312-7000 ◆ Fax: 480-312-7088

Construction Document Application

Request for Site Visits and/or Inspections

This request concerns all property identified in the construction document (plan review) application.

Project Name: _____

Project Address: _____

STATEMENT OF AUTHORITY:

1. I am the owner of the property, or I am the duly and lawfully appointed agent of the property and have the authority from the owner to sign this request on the owner's behalf. If the land has more than one owner, then I am the agent for all owners, and the word "owner" refer to them all.

2. I have the authority from the owner to act for the owner before the City of Scottsdale regarding any and all development application regulatory or related matter of every description involving all property identified in the construction document.

STATEMENT OF REQUEST FOR SITE VISITS AND/OR INSPECTIONS

1. I hereby request that the City of Scottsdale's staff conduct site visits and/or inspections of the property identified in the development application in order to efficiently process the application.

2. I understand that even though I have requested the City of Scottsdale's staff conduct site visits and/or inspections, city staff may determine that a site visit and/or an inspection is not necessary, and may opt not to perform the site visit and/or an inspection.

Property owner /Property owner's agent: _____
Print Name

_____
Signature

City Use Only:
Submittal Date: _____ Plan review number: _____
Planning l·yŘ 5ŜØŜf2LJYŜyŭ {ŜNØXŜă
7447 E Indian School Road, Suite 105, Scottsdale, AZ 85251 ♦ Phone: 480-312-7000 ♦ Fax: 480-312-7088

DEVELOPMENT FEES

Effective July 1, 2014
Schedule #07-01-14

Collection of Development fees

Pursuant to City of Scottsdale Revised Code Section 49-82: Unless otherwise specified by a Development Agreement adopted in accordance with Section 49-84 of this Article, development fess shall be paid before issuance of a building permit according to the current development fee schedule for the Service Area. If a building permit is not issued, refer to Section 49-82, paragraphs 2 through 5 to determine development fee payment requirements.

Meter Size

Water meters shall be sized to the recommended maximum capacity shown in the City's Design Standards and Policies Manual, Section 6-1.416 (Figure 6.1-4). In the event of a disagreement between the developer and the city as to the appropriate size of the meter, the city's decision shall be final.

Water and wastewater development fees shall be determined according to the following schedule:

Meter Type	Water Fee	Wastewater Fee	Total Impact Fee
5/8, 3/4 and 1 Inch	$3,365	$2,042	$5,407
1 1/2 Inch	$16,825	$10,210	$27,035
2 Inch	$26,920	$16,336	$43,256
3 Inch Compound	$53,840	$32,672	$86,512
3 Inch Turbine	$74,030	$44,924	$118,954
4 Inch Compound	$84,125	$51,050	$135,175
4 Inch Turbine	$141,330	$85,764	$227,094
6 Inch Compound	$168,250	$102,100	$270,350
6 Inch Turbine	$291,073	$176,633	$467,706
8 Inch Compound	$269,200	$163,360	$432,560

For more information please call 480-312-5685 or email Water Resources at
enterprisefinance@scottsdaleaz.gov

Miscellaneous Water Meter/Service Charges

Effective July 1, 2014

METER SIZE	METER ONLY (1)	SERVICE ONLY	TURBINE METER ONLY	METER AND SERVICE
5/8"	$174	$766	N/A	$940
3/4"	$197	$763	N/A	$960
1"	$244	$873	N/A	$1,117
1.5"	$443	$1,452	N/A	$1,895
2"	$535	$1,620	N/A	$2,155
3"	$1,905	N/A	$895	N/A
4"	$3,135	N/A	$1,900	N/A
6"	$5,510	N/A	$3,130	N/A
8"	$7,100	N/A	$5,000	N/A
(1) Includes delivery				

***METER & SERVICE IN THE COUNTY ADD 25% SURCHARGE**

Fireline 1.5" Service	$1,558
Fireline 2" Service	$1,725
Refuse Container	$86.10
Recycle Container	$67.71
Move Service & Meter or Meter Only	
Less than 15 feet	$322
Greater than 15 feet	Actual Cost
Raise or Lower Service & Meter to Grade	$200
Meter Bench Test - Malfunctioning	$0
Meter Bench Test - Normal Functioning	$50
Water Main Shutdown	$186
Temporary Construction Meter Deposit For 1" Meter	$300
Temporary Construction Meter Deposit For 3" Meter	$1,200

Please call Utility Billing at 480-312-2461 for questions on Hydrant Meters

Please call Development Services at 480-312-2500 for questions on Construction Flow Meters

Learn more at Scottsdaleaz.gov/Assets/Public+Website/water/Water+Operations/ConstHydrantMeterFS.pdf

Source: City of Scottsdale Revised City Code, Section 49

City of Scottsdale

Miscellaneous Water Meter/Service Fees