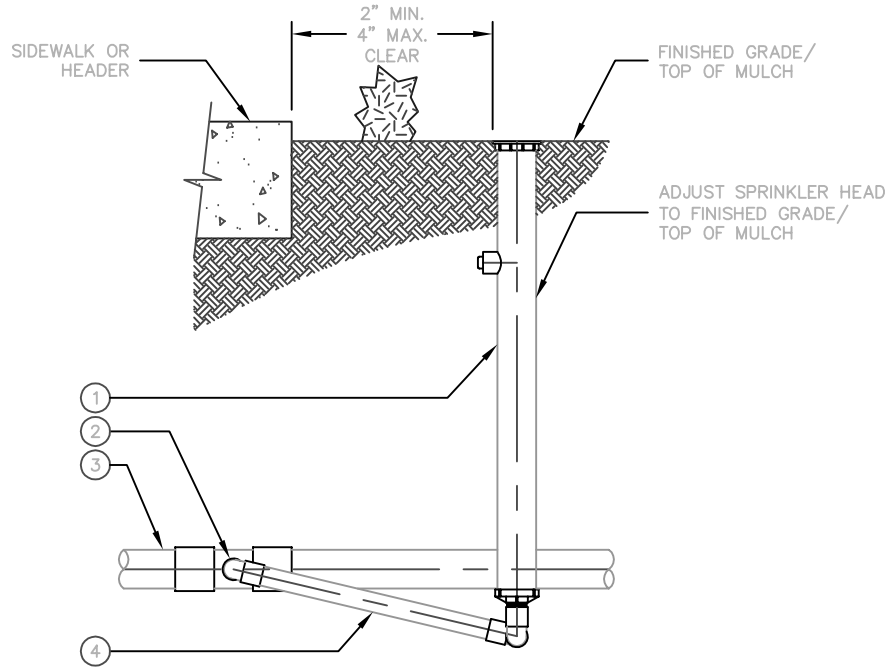

SWING JOINT ASSEMBLY ELEVATION

SCALE: NTS

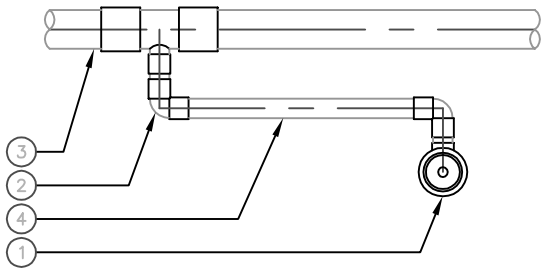

SWING JOINT ASSEMBLY PLAN

SCALE: NTS

LIST OF MATERIALS

1. 12" POP-UP SPRAY SPRINKLER HEAD
2. STREET ELL (1 OF 3) SCH 40 PVC
3. PVC LATERAL PIPE
4. SCH 80 NIPPLE TBE

NOTES

1. SWING JOINT TO BE THE SAME SIZE AS SPRINKLER HEAD INLET.
2. SWING JOINT SHALL BE CONNECTED TO BOTTOM OUTLET.
3. NO PRE-FAB SWING JOINTS
4. NO MARLEX FITTINGS

REVISED: 2/27/02

DETAIL NO. 2646	City of Scottsdale Standard Details	SHRUB POP-UP SPRINKLER ASSEMBLY	DETAIL NO. 2646