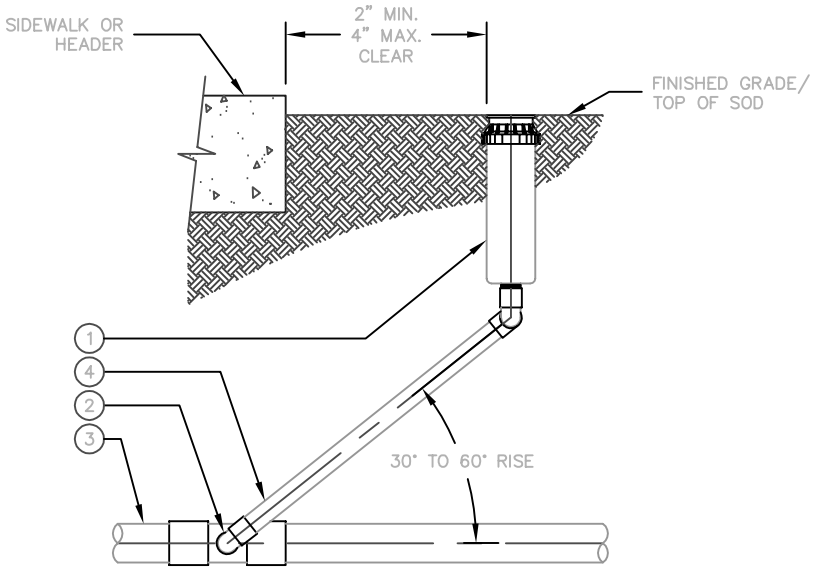

SWING JOINT ASSEMBLY ELEVATION

SCALE: NTS

LIST OF MATERIALS

1. ROTOR SPRINKLER HEAD
2. STREET ELL (1 OF 3) SCH 40 PVC
3. PVC LATERAL PIPE
4. SCH 80 NIPPLE TBE

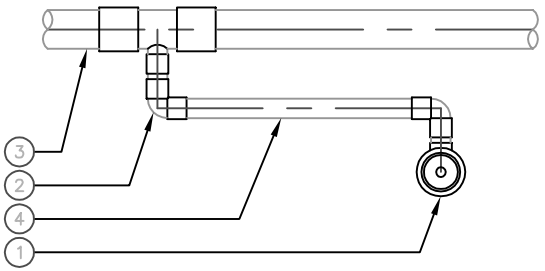

SWING JOINT ASSEMBLY PLAN

SCALE: NTS

NOTES

1. SWING JOINT TO BE THE SAME SIZE AS SPRINKLER HEAD INLET.
2. NO PRE-FAB SWING JOINTS
3. NO MARLEX FITTINGS

REVISED: 2/27/02

DETAIL NO. 2644	City of Scottsdale Standard Details	ROTOR SPRINKLER ASSEMBLY	DETAIL NO. 2644