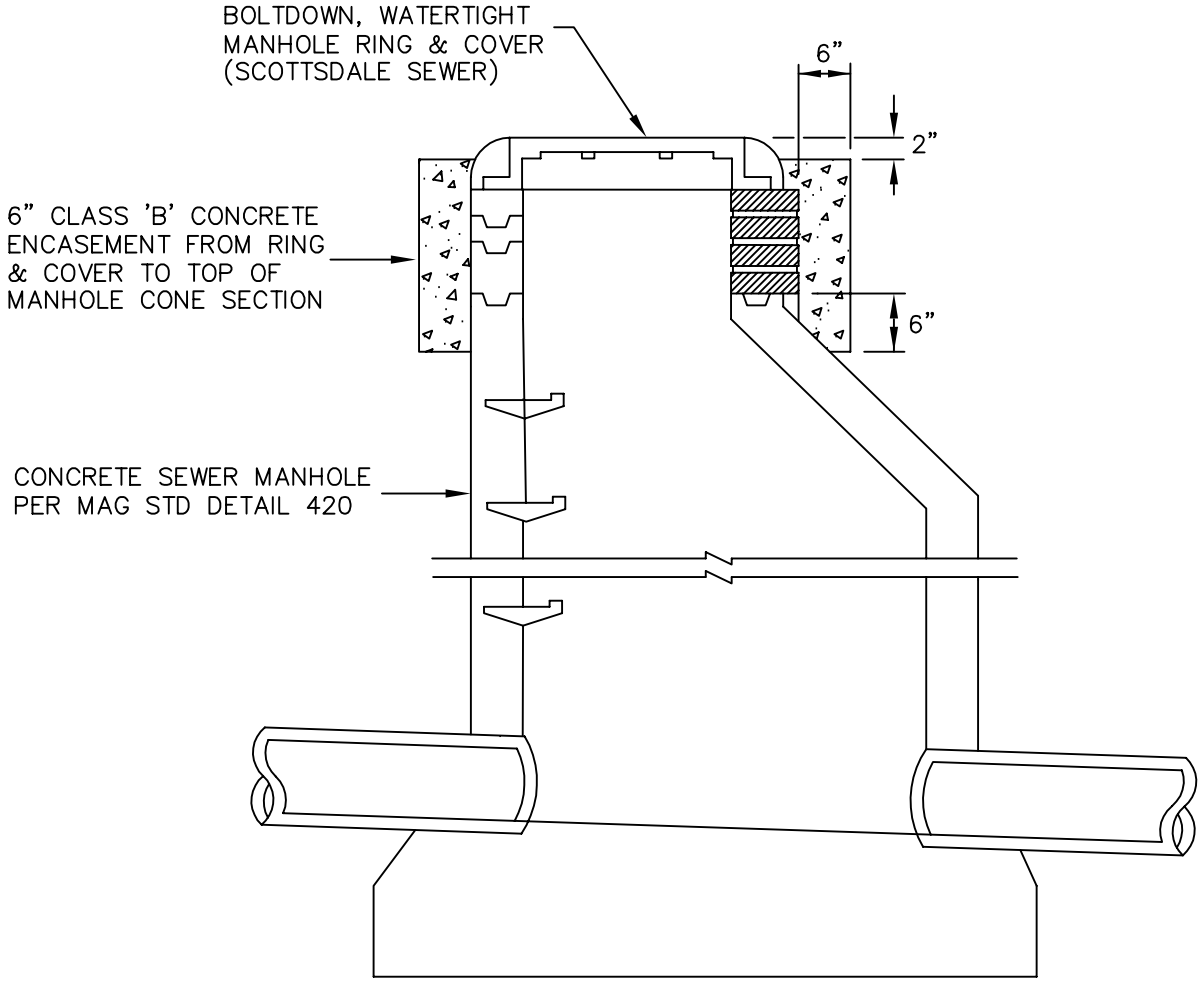

DETAIL NO.			DETAIL NO.
2420	City of Scottsdale Standard Details	WATER TIGHT CONCRETE SEWER MANHOLE	2420