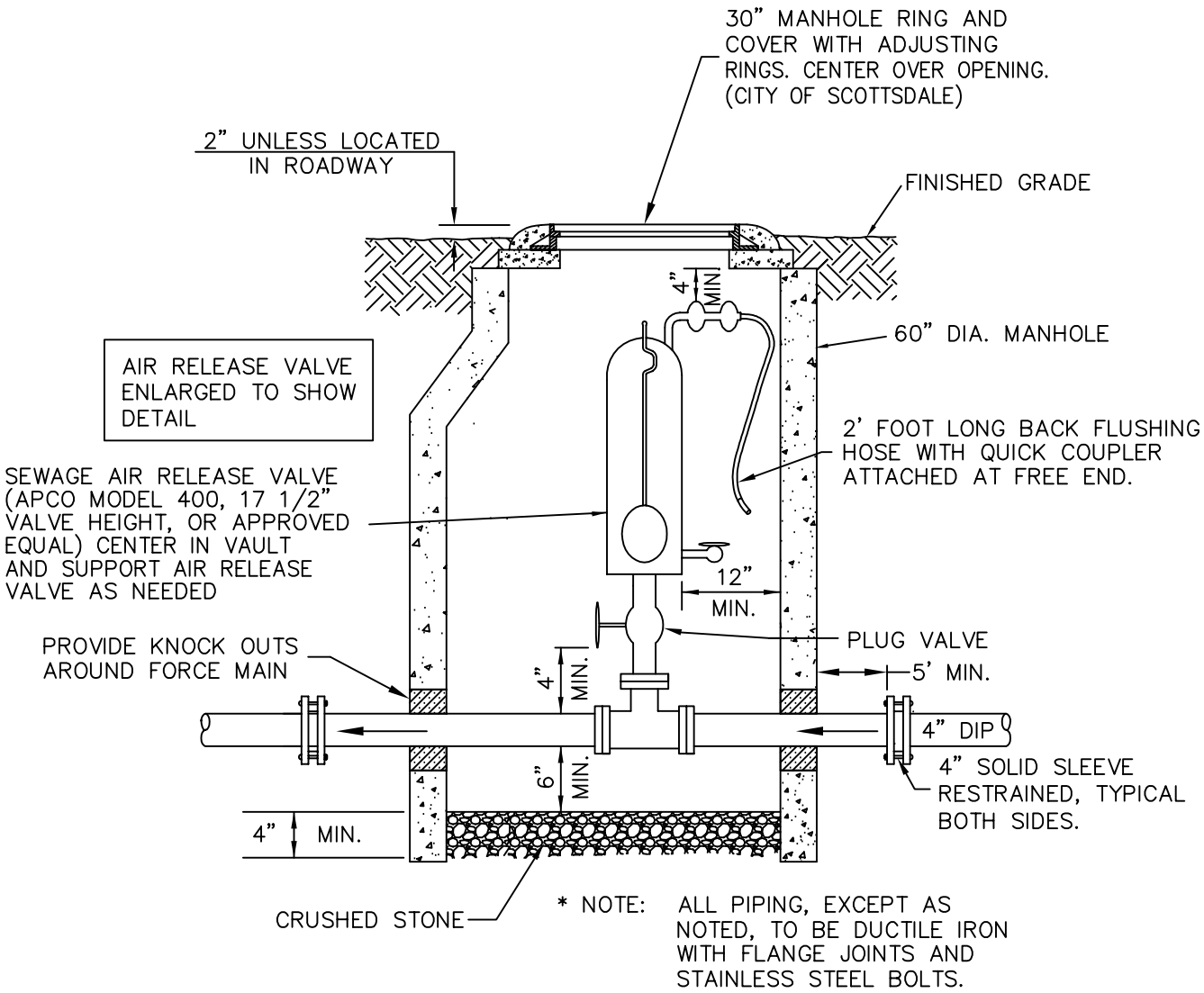

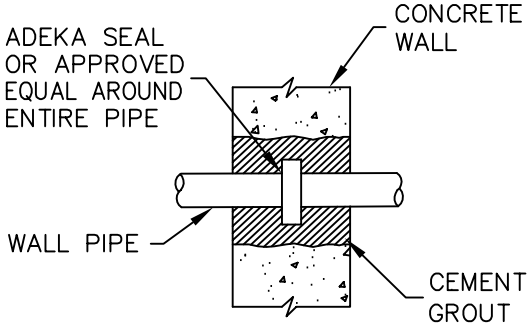

SEAL DETAIL

NOTE: TO BE USED FOR ALL PIPES PASSING THROUGH WALLS.

DETAIL NO. 2405	City of Scottsdale Standard Details	SEWER AIR RELEASE VALVE	DETAIL NO. 2405