REVISED 2/09/99

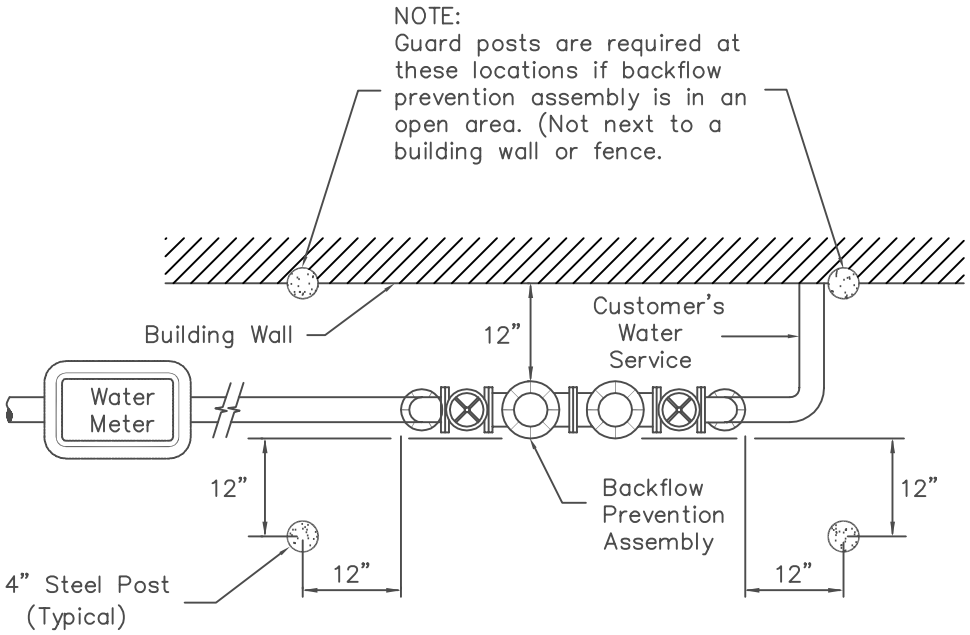

PLAN VIEW

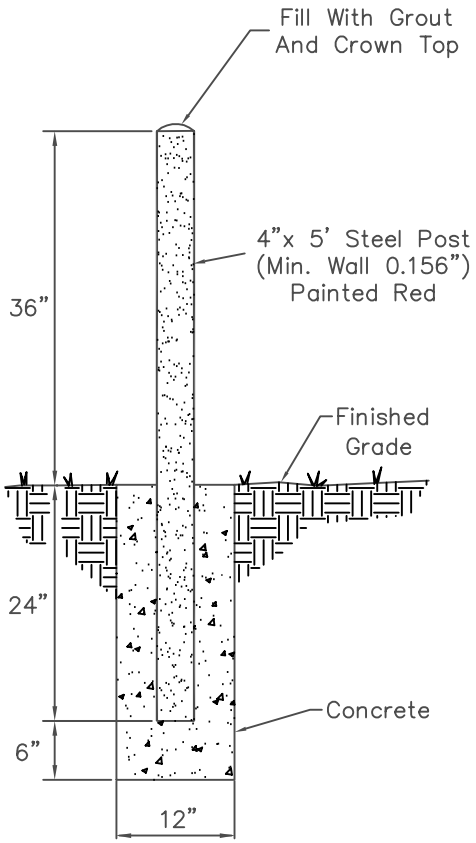

GUARD POST SECTION

DETAIL NO.	City of Scottsdale Standard Details	APPROVED BY:	GUARD POSTS FOR BACKFLOW PREVENTION ASSEMBLIES	DETAIL NO.
2356				2356