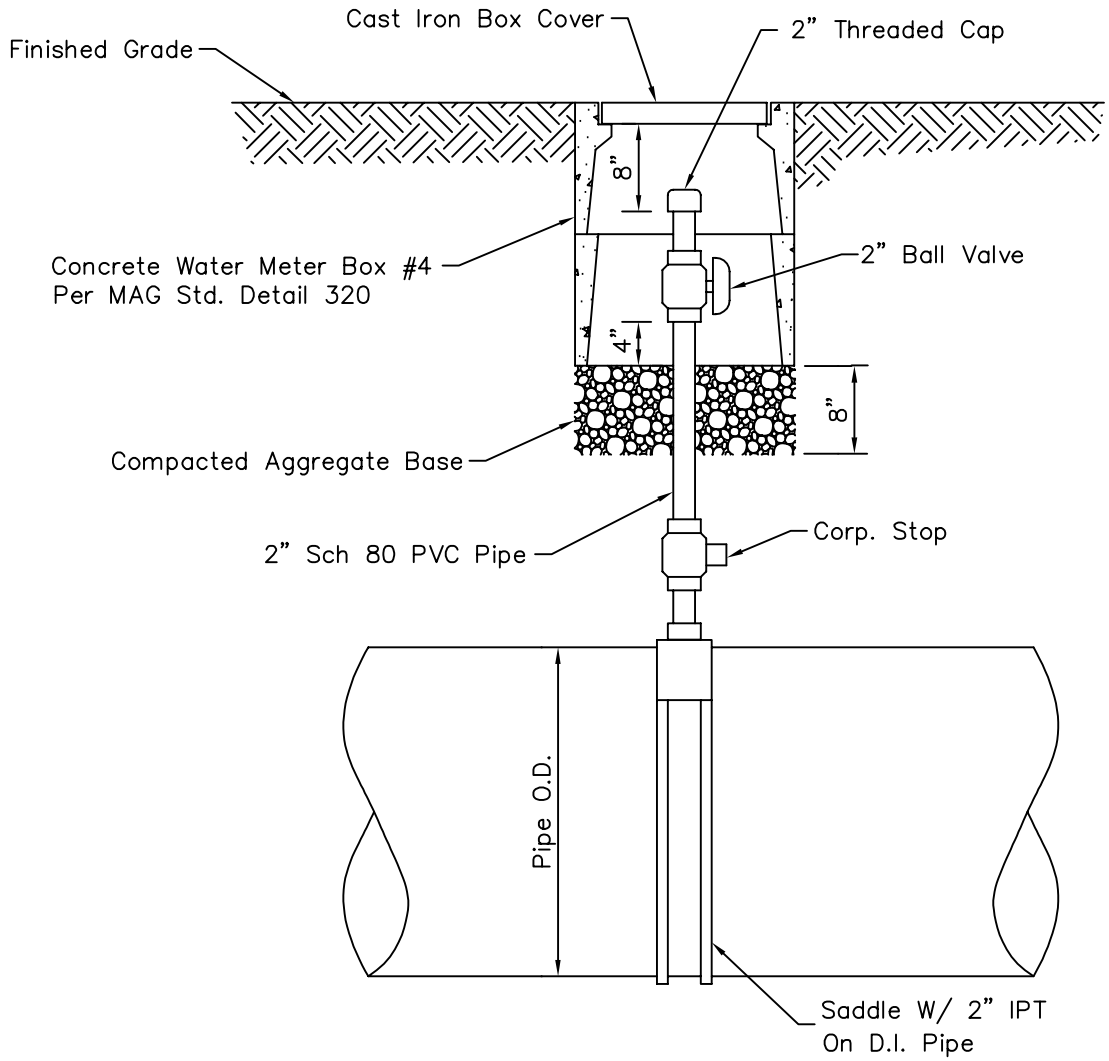

REVISED 1/4/93

DETAIL NO.	City of Scottsdale Standard Details	APPROVED BY:	TAP FOR FUTURE CHLORINE INJECTION	DETAIL NO.
2333				2333