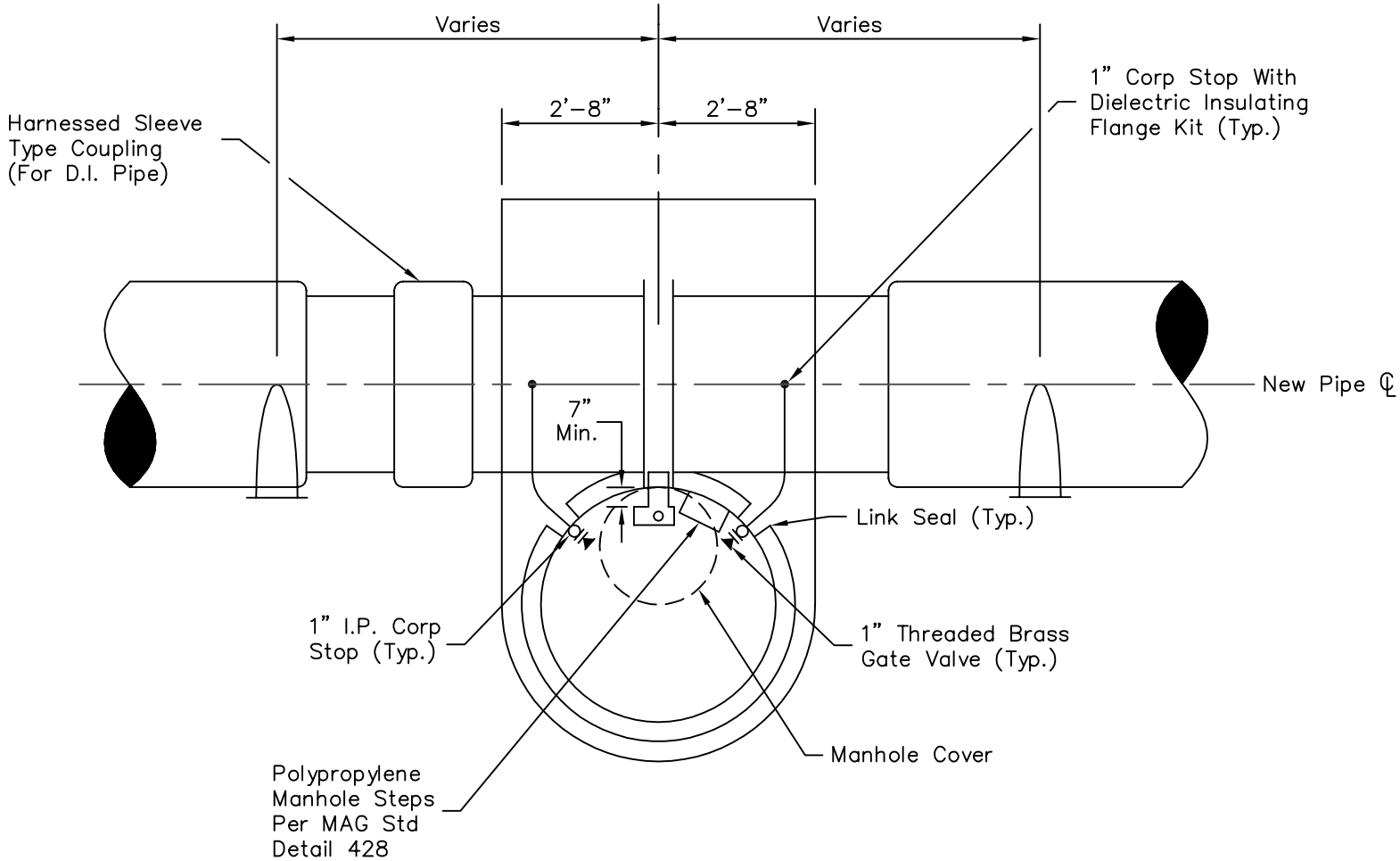

PLAN

REVISED 1/14/93

DETAIL NO.	City of Scottsdale Standard Details	APPROVED BY:	BUTTERFLY VALVE OPERATOR MANHOLE	DETAIL NO.
2305-2				2305-2