REVISED 5/23/15

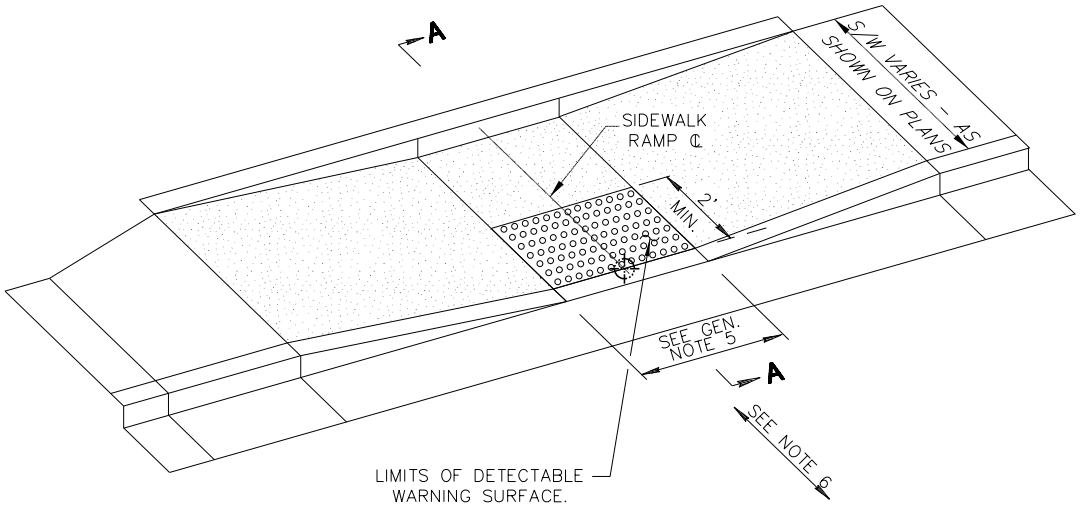


**INSTALLATION EXAMPLE**

NTS

## GENERAL NOTES

1. DETECTABLE WARNING SURFACE SHALL CONSIST OF RAISED TRUNCATED DOMES, AND SHALL CONFORM TO THE DETAILS IN THE PLANS AND IN ACCORDANCE WITH MANUFACTURER'S SPECIFICATIONS AND INSTALLATION INSTRUCTIONS.
2. ALL DETECTABLE WARNING SURFACES SHALL START AT BACK OF CURB, MEASURE 24 INCHES IN DEPTH AND COVER THE COMPLETE WIDTH OF THE RAMP LANDING.
3. 70% VISUAL CONTRAST IS REQUIRED. THE COLOR SHALL BE AN INTEGRAL PART OF THE DETECTABLE WARNING MATERIAL. COLOR WILL BE SUBJECT TO APPROVAL BY CITY STAFF.
4. THE CONCRETE WORK REQUIRED TO FORM A BLOCK OUT FOR CAST IN PLACE APPLICATIONS, OR TO CREATE A SMOOTH AND CLEAN CONCRETE SURFACE FOR SURFACE APPLICATIONS, SHALL BE INCLUDED IN THE COST OF THE CONCRETE CURB RAMP. THE COST OF FURNISHING AND INSTALLING THE DETECTABLE WARNING DEVICE SHALL BE INCLUDED IN THE COST OF THE CONCRETE CURB RAMP.
5. WIDTH PER RAMP DETAIL OR AS CALLED OUT ON PLANS.
6. ALL RAMPS AND DETECTABLE WARNING SHALL BE ALIGNED PERPENDICULAR TO THE CURB AT THE RAMP CONTROL POINT. SEE PLANS FOR RAMP CONTROL POINT.

RAMP CONTROL POINT (TYP.) SEE PLANS

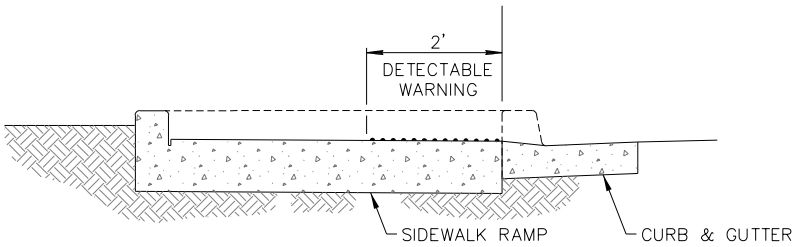


**SECTION A-A**

NTS

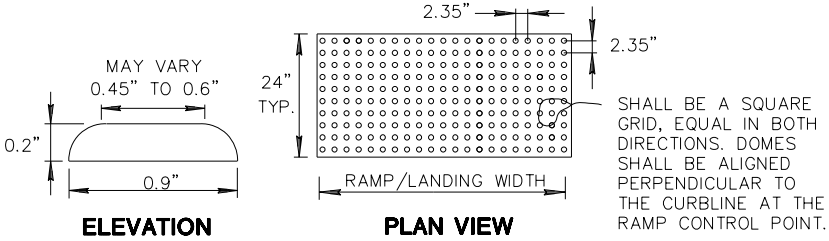


**TRUNCATED DOME DETECTABLE WARNING**

NTS

| DETAIL NO. | City of Scottsdale Standard Details | APPROVED BY: | DETECTABLE WARNING SURFACE | DETAIL NO. |
|---|---|---|---|---|
| 2231 | | Scottsdale Standards & Specifications Committee | | 2231 |