REVISED 12/5/11

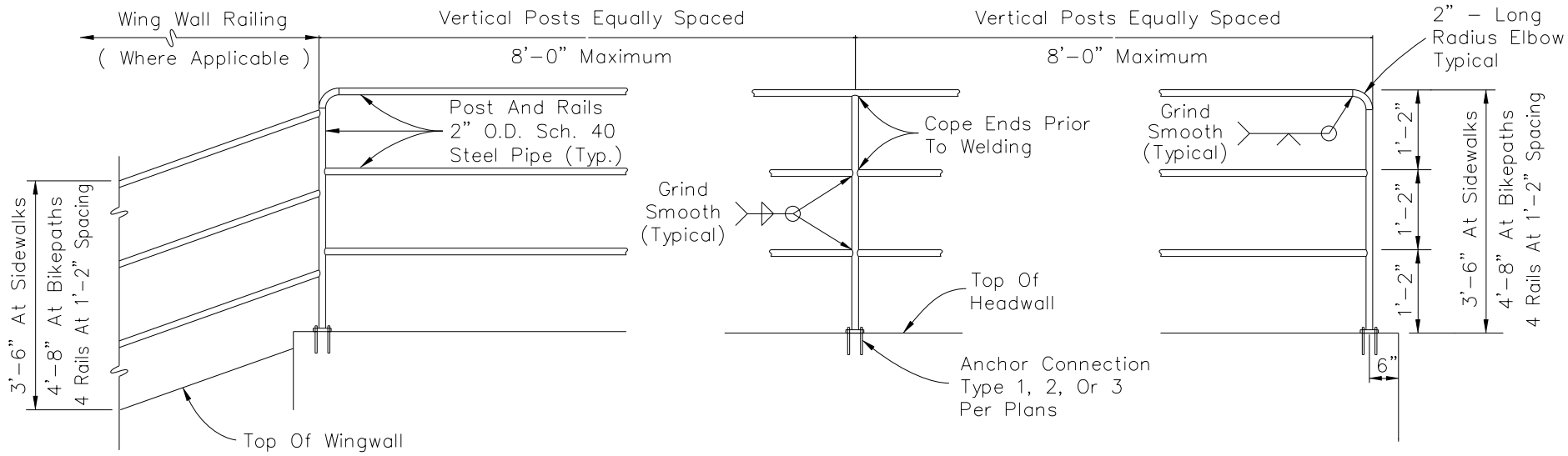

ELEVATION

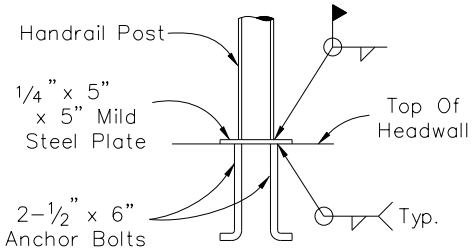

TYPE 1
ANCHOR PLATE DETAIL

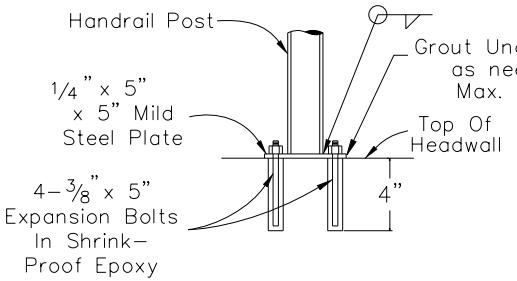

TYPE 2
EXPANSION BOLT DETAIL

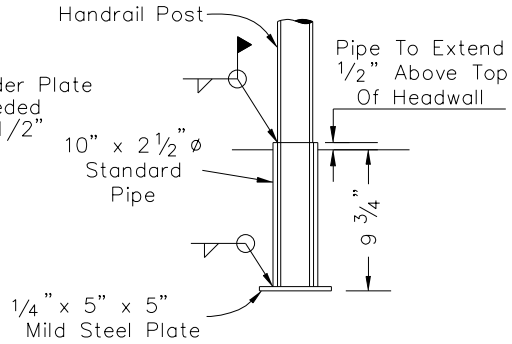

TYPE 3
PIPE SLEEVE DETAIL

CONSTRUCTION NOTES

1. Paint handrail per MAG Specifications Section 530. Color per plans.
2. Vertical posts to be evenly spaced.

DETAIL NO.	City of Scottsdale Standard Details	APPROVED BY:	HANDRAIL DETAIL	DETAIL NO.
2508		Scottsdale Standards & Specifications Committee		2508