REVISED 4/15/09

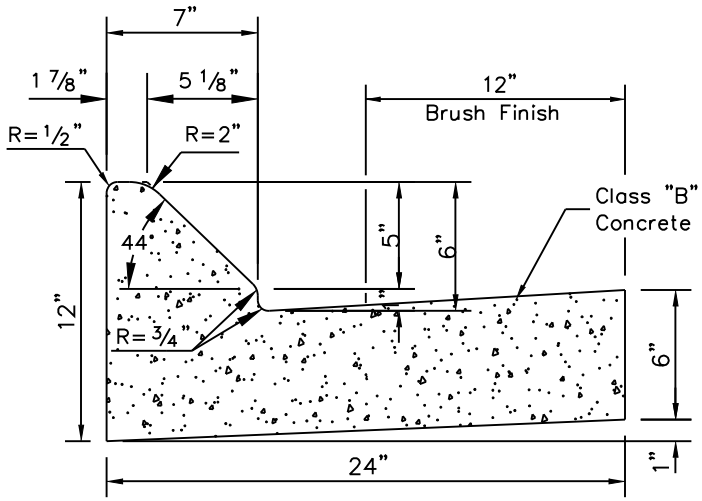

MOUNTABLE/MEDIAN CURB & GUTTER

TYPE "M"

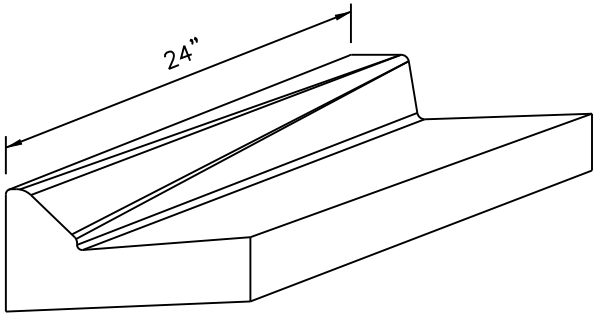

MOUNTABLE CURB TO VERTICAL CURB TRANSITION

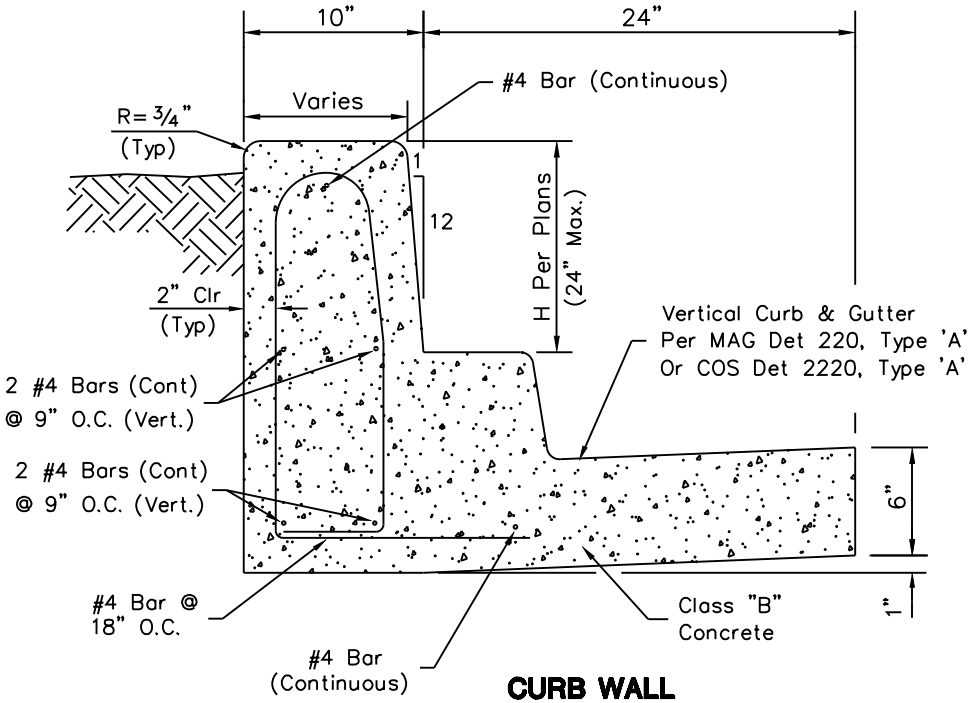

CURB WALL

TYPE "W"

NOTES

1. All exposed surfaces to be trowel finished except as shown. See M.A.G. Section 340.
2. Contraction joint spacing shall be 10' maximum or as directed by the Inspector.
3. Construct curb and install 1/2" mastic expansion joints, A.S.T.M. D-1751, per M.A.G. Sec. 340 & 729 and C.O.S. Sec. 340.
4. Gutter lip may be depressed where indicated on plans and constructed as shown on COS Detail 2220, Type "A".
5. Colored concrete, if called for on the plans, shall be colored integrally.
6. Steel reinforcement shall be per M.A.G. Section 727.

DETAIL NO.	City of Scottsdale Standard Details	APPROVED BY:	CURB & GUTTER - TYPES M & W	DETAIL NO.
2221		Scottsdale Standards & Specifications Committee		2221