NOTE:

Lettering shall be Clearview 1–W font

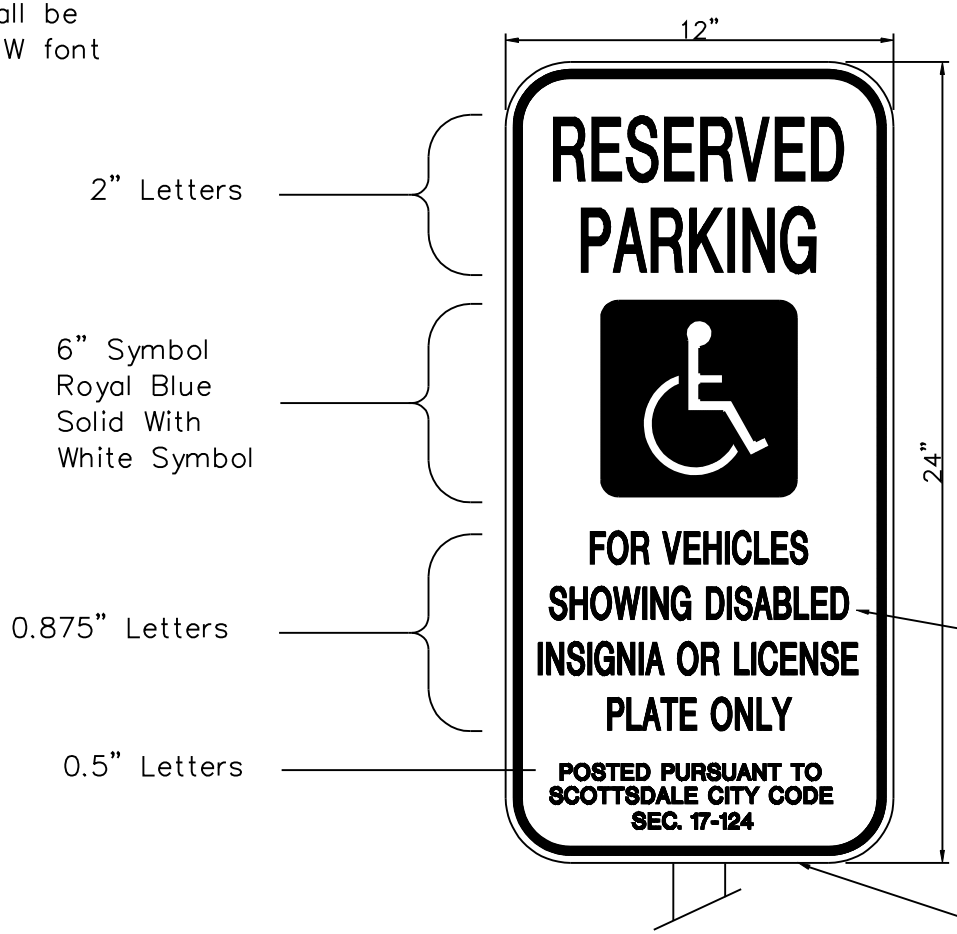

ACCESSIBLE SIGNAGE

One Sign At Each
Accessible Parking Stall

MOUNTING OPTIONS (SEE PLANS)

A) Flexible P.E. Post With Surface Mount Base – Epoxy To Pavement Surface

B) Perforated Galvanized Tubing Per COS Detail 2131. Install In Landscape Areas Only.

C) Surface Mount To Structure

D) Mount As Detailed On Plans

Green Borders and Text, and Blue Symbol on White Retroreflective Background (Typ.)
Background: ASTM Type IV Sheeting
Copy: Same As Above
Substrate: 0.080 Gauge Treated Aluminum

Bottom of Sign Shall Be Five Feet Above Finish Surface

REVISED 4/24/07

DETAIL NO.	City of Scottsdale Standard Details	APPROVED BY: Scottsdale Standards & Specifications Committee	ACCESSIBLE SIGNAGE	DETAIL NO.
2124				2124

REVISED 1/3/94

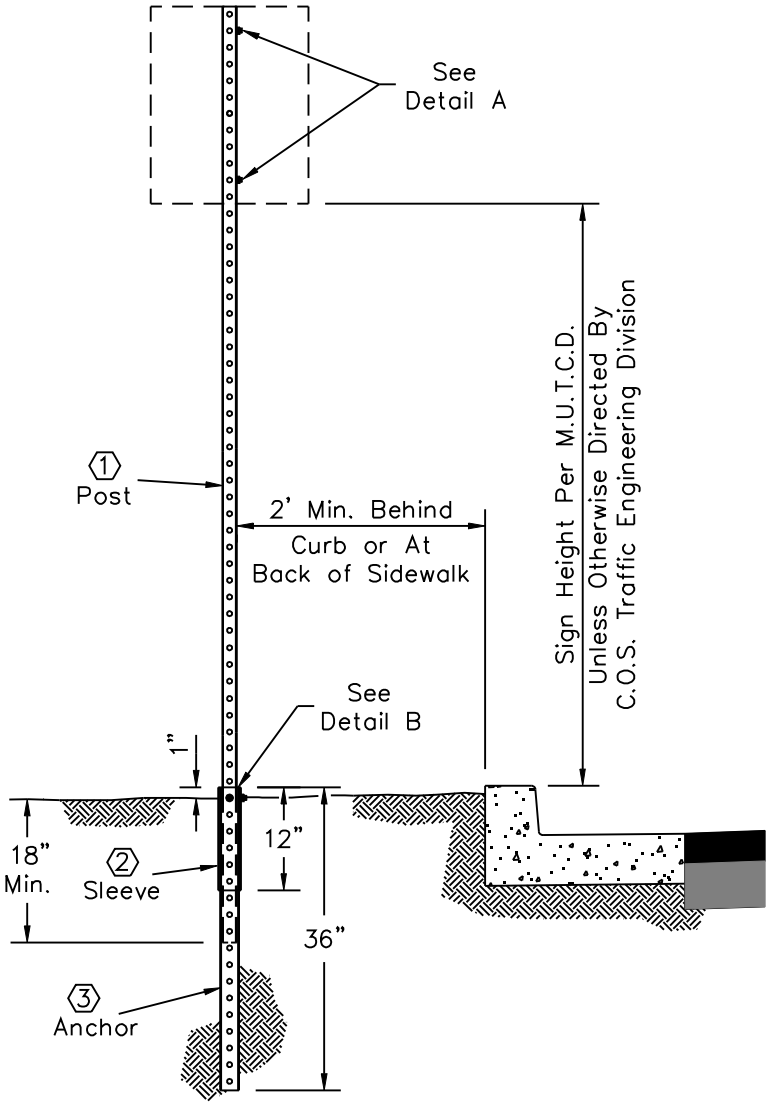

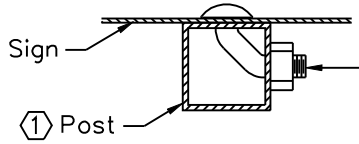

$1\frac{11}{32}$" x $\frac{31}{32}$" Thrd x $\frac{5}{16}$" ø Corner Bolt With $\frac{5}{16}$" Self Locking Nut

Detail A
Sign Mounting

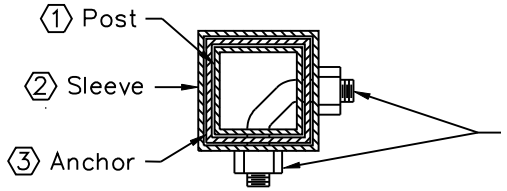

$1\frac{9}{16}$" x $1\frac{3}{16}$" Thrd Each End x $\frac{5}{16}$" ø Corner Bolt With $\frac{5}{16}$" Self Locking Nuts

Detail B
Anchor Assembly

Legend

1 Post – 1-3/4" x 1-3/4" Square Perforated 0.105" Galvanized Steel Tubing (Green Finish)

2 Sleeve – 2-1/4" x 2-1/4" x 12", Square Perforated 0.105 Galvanized Steel Tubing (Green Finish)

3 Anchor – 2" x 2" x 36", Square Perforated 0.105" Galvanized Steel Tubing (Green Finish)

NOTE:

1. Sign Post, Sleeve And Anchor Per COS Supplemental Spec. Section 402.3

DETAIL NO.	City of Scottsdale Standard Details	APPROVED BY:	SIGN POST INSTALLATION	DETAIL NO.
2131		Scottsdale Standards & Specifications Committee		2131

REVISED 5/25/05

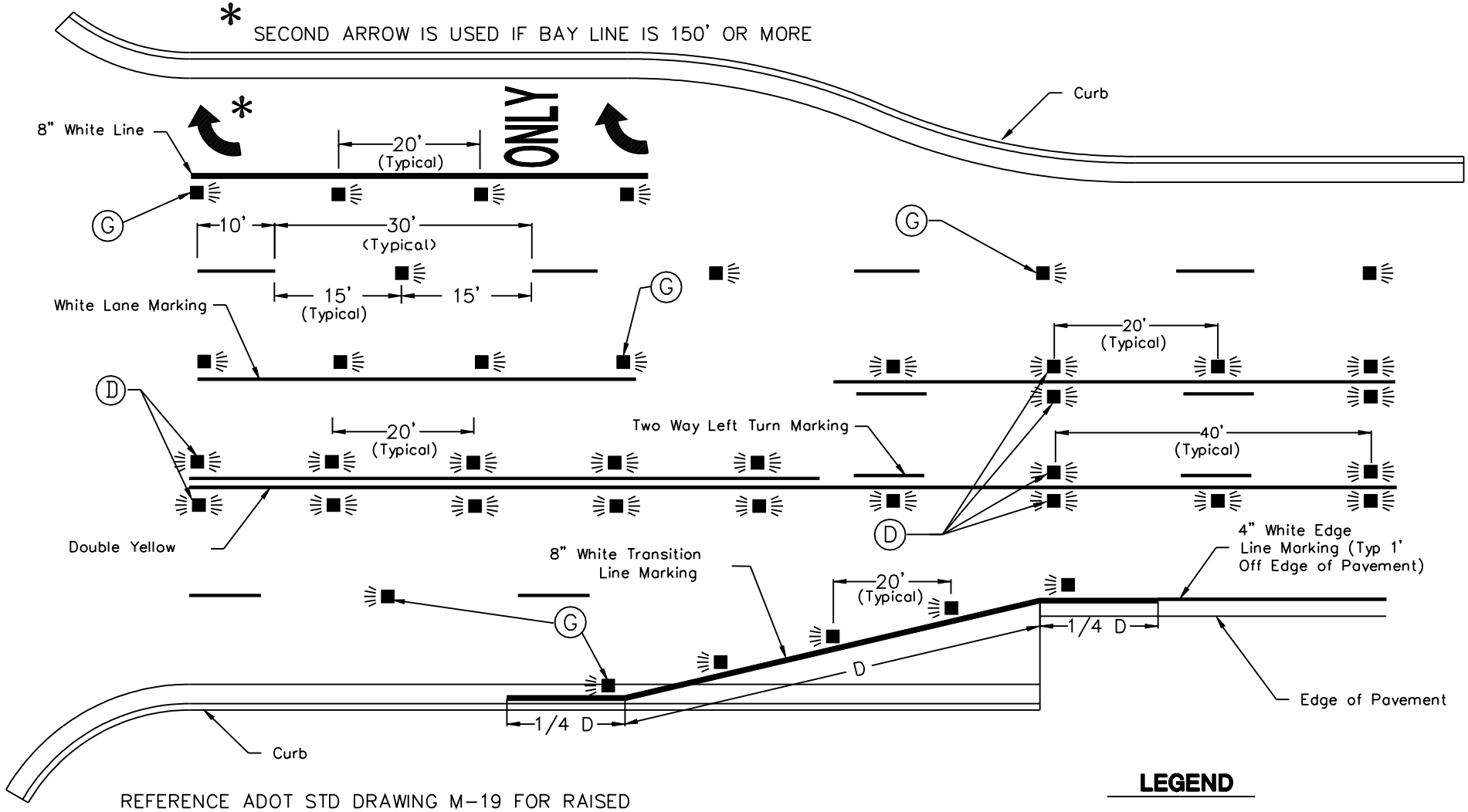

REFERENCE ADOT STD DRAWING M-19 FOR RAISED PAVEMENT MARKERS.

SEE STANDARD DETAIL 2363 FOR FIRE HYDRANT MARKERS

LEGEND

(G) – TYPE "G" WHITE, ONE WAY REFLECTIVE

(D) – TYPE "D" YELLOW, TWO WAY REFLECTIVE

DETAIL NO.	City of Scottsdale Standard Details	APPROVED BY: Scottsdale Standards & Specifications Committee	RAISED PAVEMENT MARKER LAYOUT	DETAIL NO.
2132				2132

Revised 4/20/07

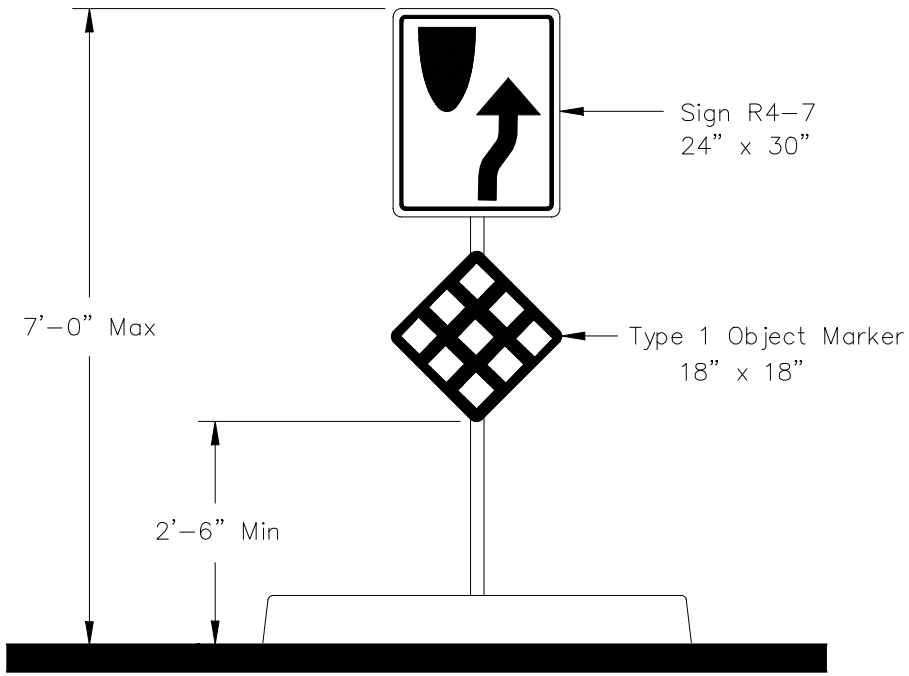

TYPE "A"

(AT SIGNALIZED INTERSECTIONS
OR AS SHOWN ON PLANS AND FIRST &
LAST NOSE ON A STRING OF MEDIANS)

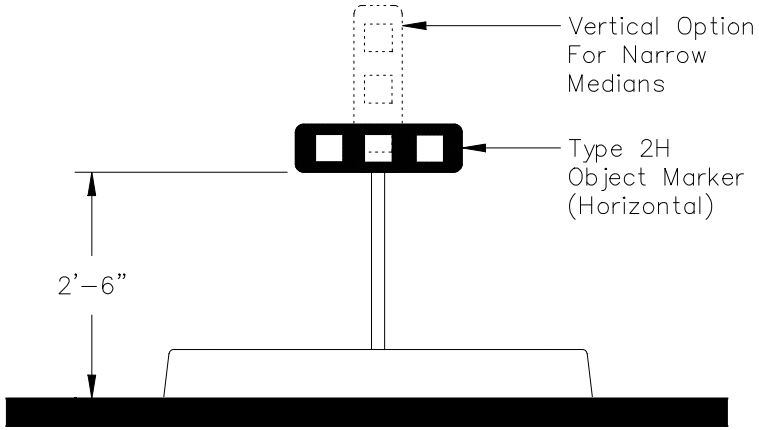

TYPE "B"

(ALL OTHER MEDIANS)

NOTES:

1. See COS Std Det 2225 Or 2226 For Typical Location.
2. Sign Posts Per COS Std Det 2131.

DETAIL NO.	City of Scottsdale Standard Details	APPROVED BY:	MEDIAN NOSE SIGNING-TYPE A&B	DETAIL NO.
2133-1		Scottsdale Standards & Specifications Committee		2133-1

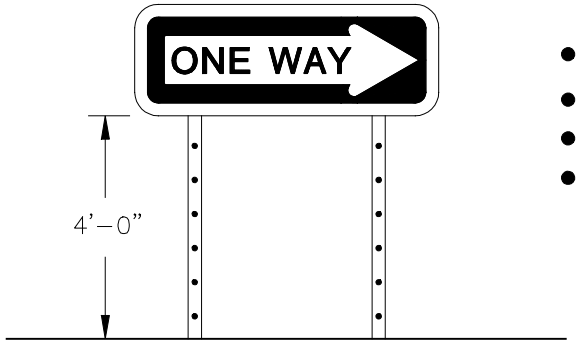

TYPE "A"

- R6-1R or R6-1L
- 12" x 36" blank size
- 0.125 blank type
- Black legend and background, white arrow

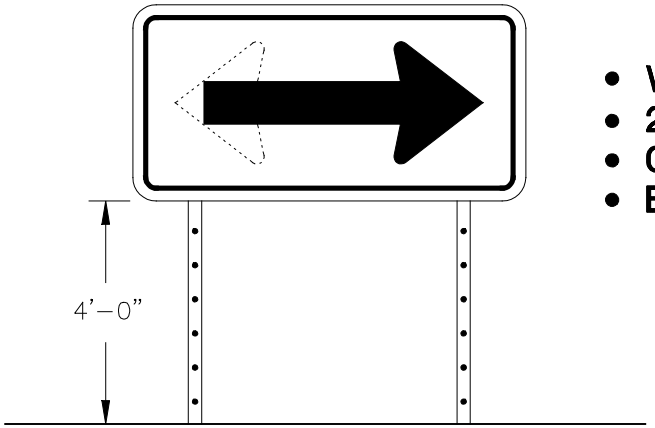

TYPE "B"

- W1-6R or W1-6L, or W1-7 (double arrow)
- 24" x 48" or 30" x 60" blank sizes
- 0.125 blank type
- Black arrow and border, yellow background

NOTES:

1. Sign posts per COS Std. Detail 2131
2. Sign sheeting per COS Supplemental Specs. Section 402.3.

Revised 4/20/07

DETAIL NO.	City of Scottsdale Standard Details	APPROVED BY: Scottsdale Standards & Specifications Committee	MEDIAN OR SHOULDER SIGNING	DETAIL NO.
2133-2				2133-2

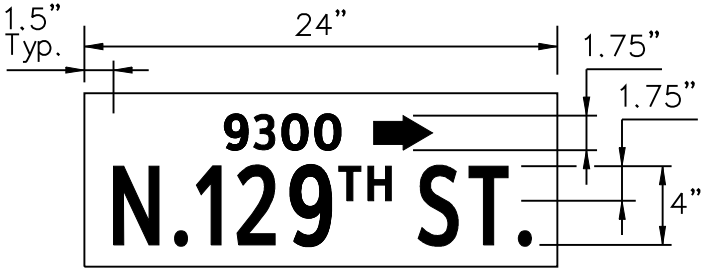

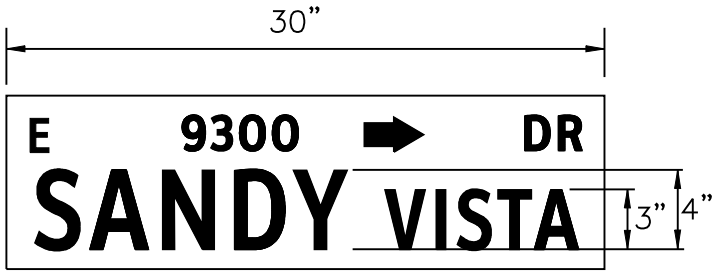

TYPE A SIGNS

ASTM Type IV Sheeting
Green/White (2 Sides)

Typeface: Clearview 2-W

Blank Sizes: 9"x 24", 9"x 30"
9"x 36", 9"x 42"

Blank Type: .091 extruded aluminum

Sign imaging: must meet FWHA standards and must be acrylic based electronic cuttable film (1170 series or equivalent) or silk screen ink. All inks and films shall be graffiti resistant.

Intended Usage: Type "A" Street Name Signs shall be used in residential areas where Residential Streets intersect with Local Collector Streets. See the COS General Plan for Street Designations.

Arrows on sign panels typically point north or east in the direction of increasing address number.

REVISED 5/06/08

DETAIL NO.	City of Scottsdale Standard Details	APPROVED BY: Scottsdale Standards & Specifications Committee	STREET NAME SIGNS - TYPE A	DETAIL NO.
2134-1				2134-1

REVISED 5/06/08

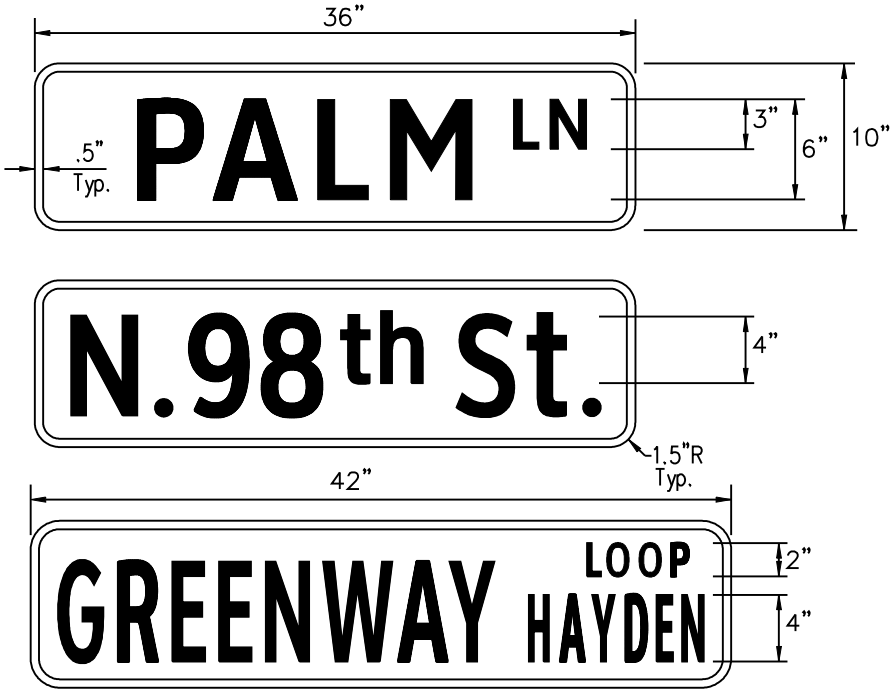

TYPE B SIGNS

ASTM Type IV Reflective Sheeting
Green/White (2 Sides)
Typeface: Clearview 2-W
Blank Sizes: 10"x 36", 10"x 42"
Blank Type: 0.125 treated aluminum

Intended Usage: Type "B" Street Name Signs shall be used where a Residential Street or a Local Collector Street intersects with a street with a classification of Major Collector or larger. See the COS General Plan for Street Designations.

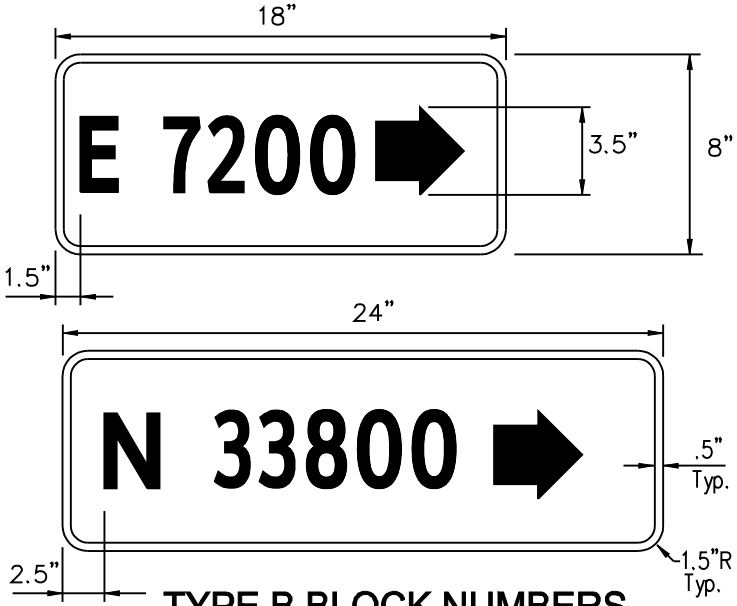

TYPE B BLOCK NUMBERS

ASTM Type IV Reflective Sheeting
Green/White (2 Sides)
Typeface: Clearview 2-W
Blank Sizes: 8"x 18", 8"x 24"
Blank Type: 0.125 treated aluminum

Type "B" Block Numbers to be mounted with Type "B" Street Name Signs. They shall be mechanically attached to the top of the Type B Street Name Sign using FHWA approved aluminum sign mounting brackets.

Sign imaging: Must meet FWHA standards. Must be acrylic based electronic cuttable film (1170 series or equivalent) or silk screen ink. All inks and films shall be graffiti resistant.

Arrows on sign panels typically point north or east in the direction of increasing address number.

DETAIL NO.	City of Scottsdale Standard Details	APPROVED BY: Scottsdale Standards & Specifications Committee	STREET NAME SIGNS - TYPE B	DETAIL NO.
2134-2				2134-2

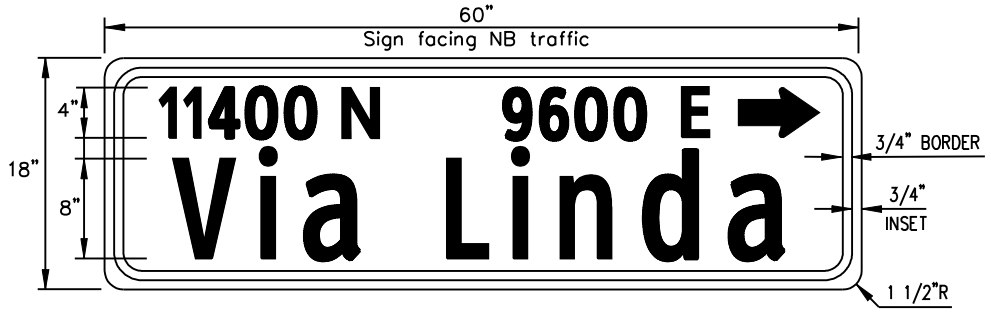

SIGN FORMAT EXAMPLE FOR OPPOSING TRAFFIC

Sign facing SB traffic

18" METRO SIGNS

Proposed ASTM Type XI Reflective Sheeting
Green/White (1 Side)
Typestyle: Clearview 2-W or 3-W
Blank Sizes: 18" x 48", 18" x 60", 18" x 72"
Blank Type: 0.080 Treated Aluminum

Intended Usage: 18" Metro Street Name Signs shall be used on signnalized minor roads with a speed limit of 35MPH or lower. See the COS General Plan for Street Designations.

Arrows on sign panels typically point north or east in the direction of increasing address number.

REVISED 5/08/08

DETAIL NO.	City of Scottsdale Standard Details	APPROVED BY: Scottsdale Standards & Specifications Committee	STREET NAME SIGNS - 18" METRO	DETAIL NO.
2134-3				2134-3

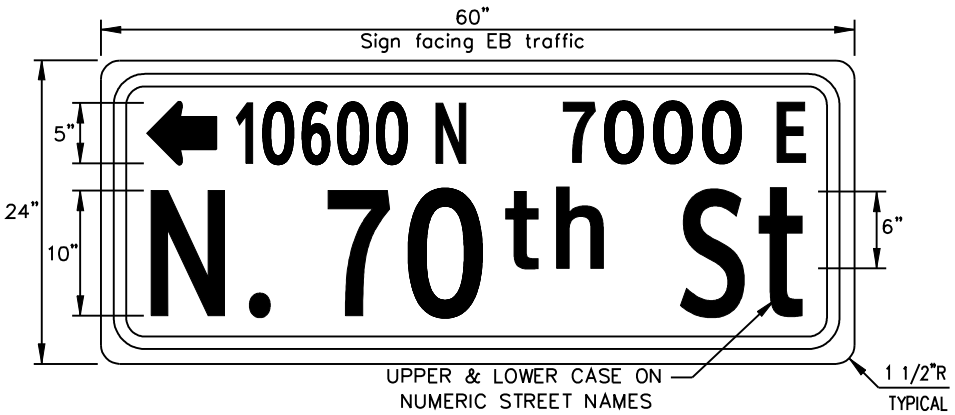

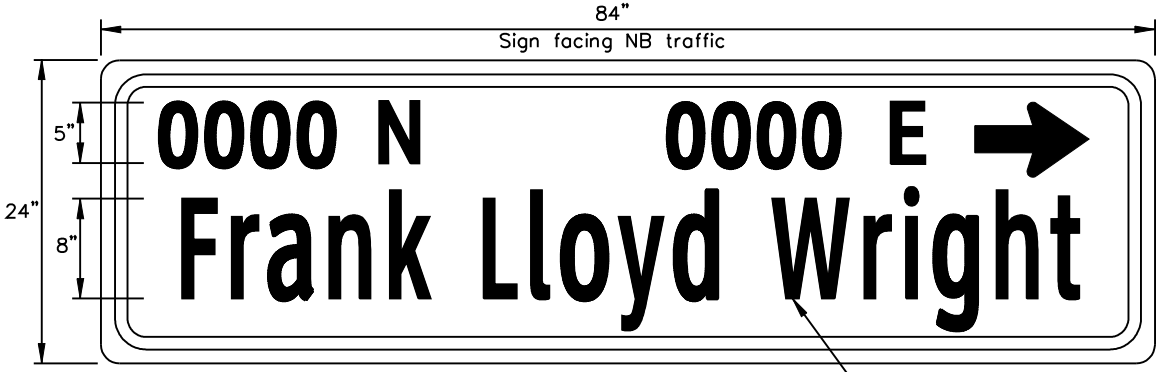

For street names that would exceed maximum length sign blank use 8" upper and lower case letters

SIGN FORMAT EXAMPLE FOR OPPOSING TRAFFIC

Sign facing WB traffic

Sign facing NB traffic

Sign facing SB traffic

24" METRO SIGNS

Proposed ASTM Type XI Reflective Sheeting
Green/White (1 Side)
Typestyle: Clearview 2-W or 3-W
Blank Sizes: 24" x 60", 24" x 72", 24" x 84"
Blank Type: 0.125 Treated Aluminum

Intended Usage: 24" Metro Street Name Signs shall be used on signalized major roads with a speed limit of 35MPH or higher. See the COS General Plan for Street Designations.

Sign imaging: Must meet FHWA standards. Must be acrylic based electronic cuttable film (1170 series or equivalent) or silk screen ink. All inks and films shall be graffiti resistant.

Arrows on sign panels typically point north or east in the direction of increasing address number.

REVISED 5/08/08

DETAIL NO.	City of Scottsdale Standard Details	APPROVED BY: Scottsdale Standards & Specifications Committee	STREET NAME SIGNS - 24" METRO	DETAIL NO.
2134-4				2134-4

REVISED 5/08/08

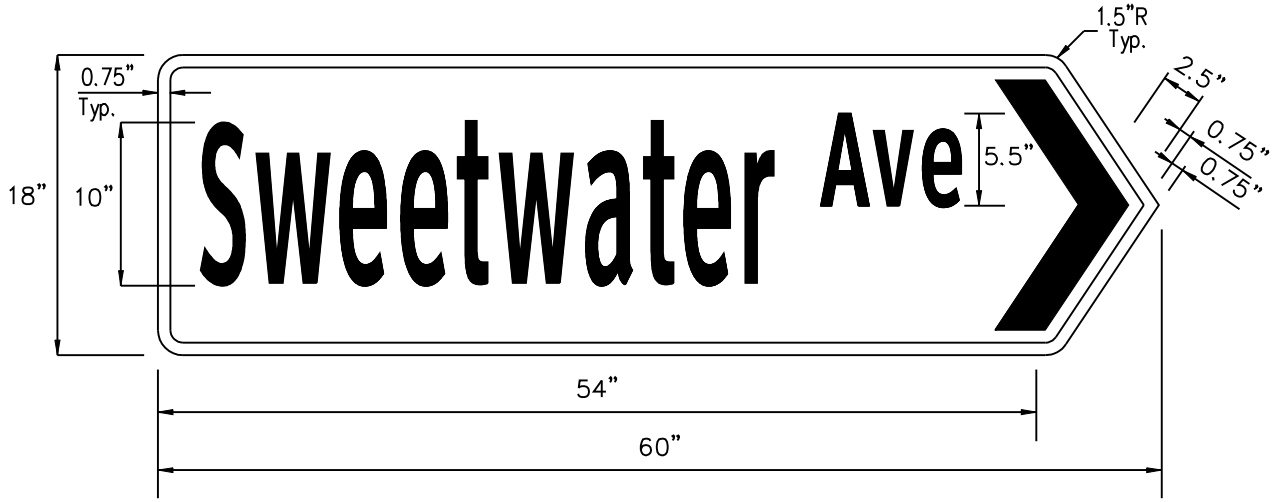

Blank Type: 0.100 gauge treated aluminum
Sheeting: ASTM Type IV – green background
Typestyle: Clearview 2–W upper and lower case
Legend and Border: White

DETAIL NO.	City of Scottsdale Standard Details	APPROVED BY: Scottsdale Standards & Specifications Committee	DIRECTIONAL STREET NAME SIGN	DETAIL NO.
2134-5				2134-5

REVISED 5/08/08

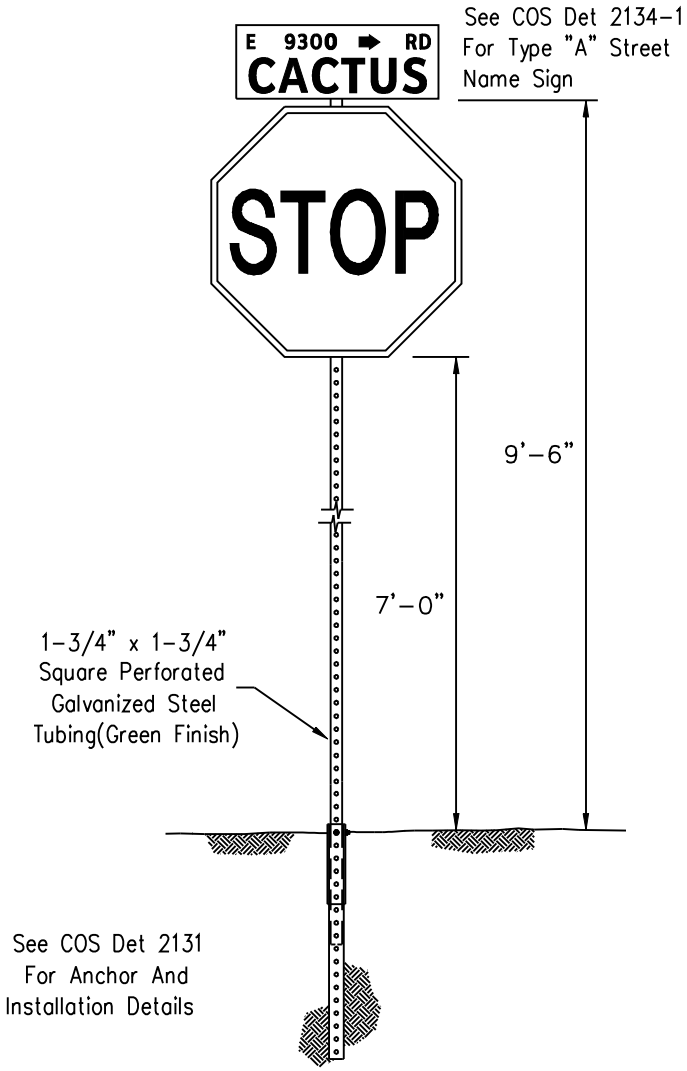

NOTES:

Street name sign and stop sign mounting height shall be measured from adjacent grade of sidewalk, top of curb or top of nearest pavement.

When no stop sign is required, the street name sign is mounted at 9 feet 6 inches.

When two street name signs are mounted one on top of the other, the height is measured to the bottom sign.

DETAIL NO.	City of Scottsdale Standard Details	APPROVED BY: Scottsdale Standards & Specifications Committee	STREET NAME SIGN WITH STOP SIGN INSTALLATION	DETAIL NO.
2135				2135

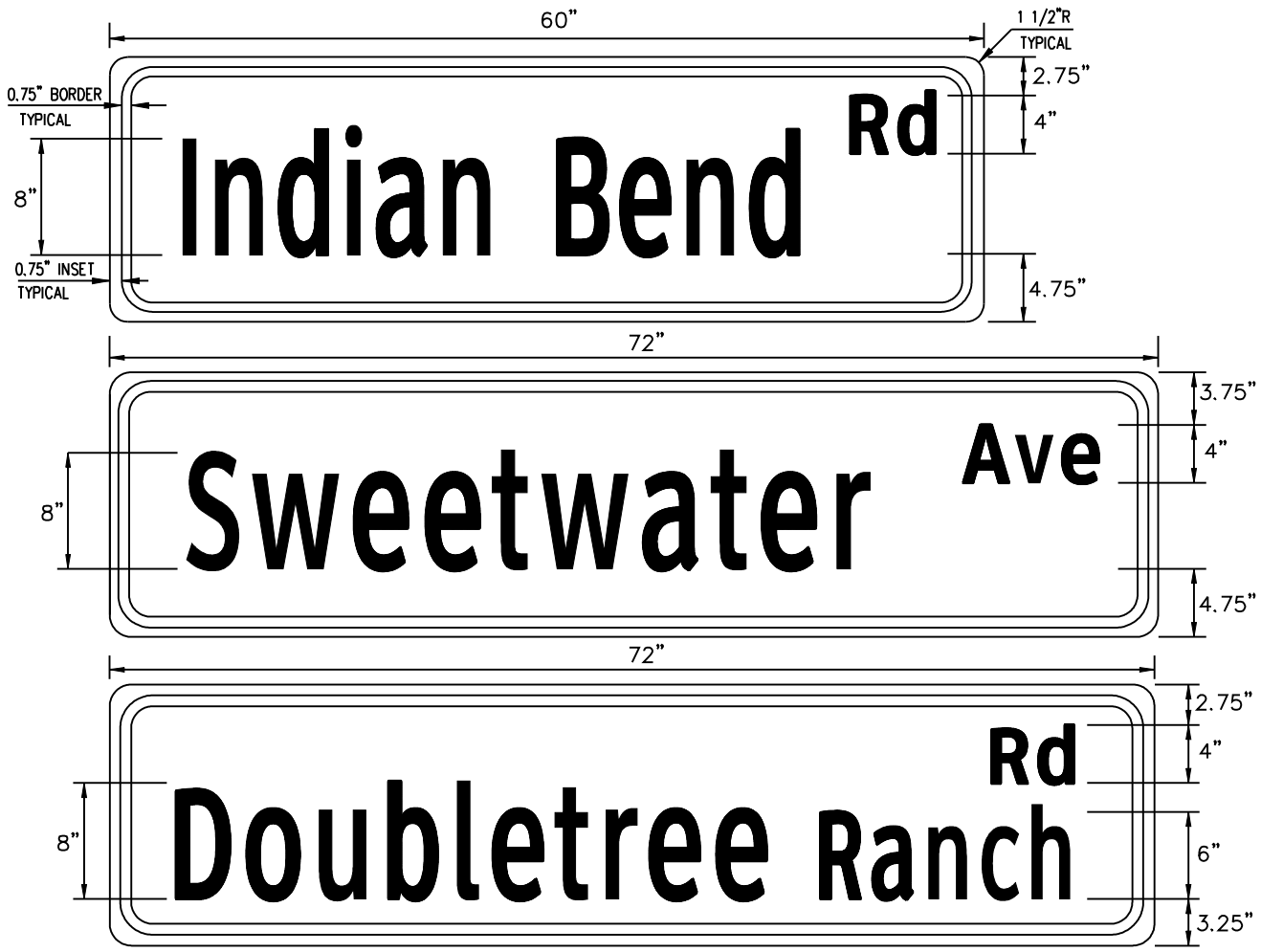

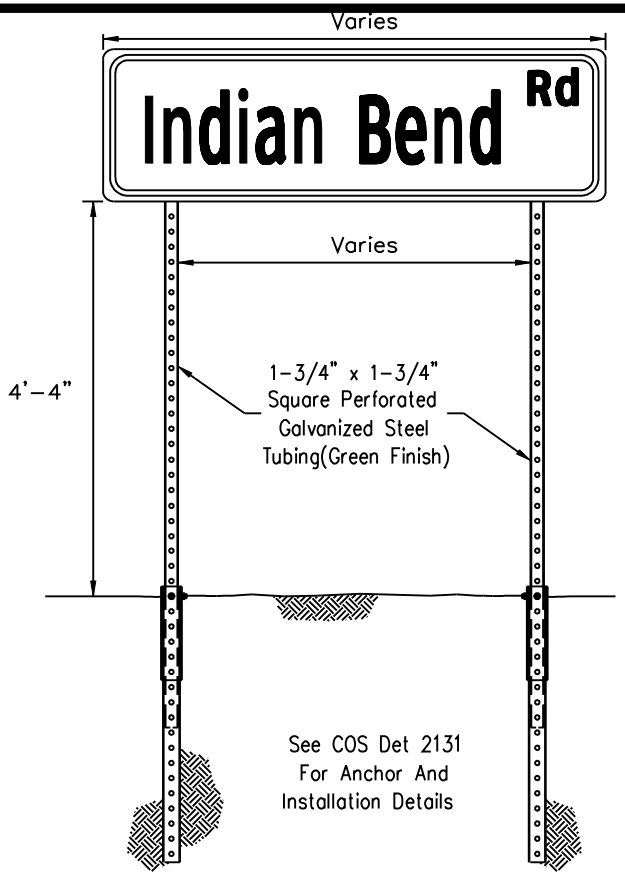

Proposed ASTM Type XI (1 Side)

Typsestyle: Clearview 2-W or 3-W

Blank Sizes: 18" x 48", 18" x 60", 18" x 72"

Blank Type: 0.080 Treated Aluminum

Sign imaging: Must meet FHWA standards and must be acrylic based electronic cutting film (1170 series or equivalent) or silk screen ink. All inks and films shall be graffiti resistant.

Intended Usage: In advance of the specified street where a collector street intersects a minor/major arterial or expressway. Location determined by multiplying the posted speed limit by 10. Sign is typically placed in a center median when available, otherwise on the right hand side of the road.

REVISED 5/12/08

DETAIL NO.	City of Scottsdale Standard Details	APPROVED BY: Scottsdale Standards & Specifications Committee	ADVANCE STREET NAME SIGNS	DETAIL NO.
2136				2136

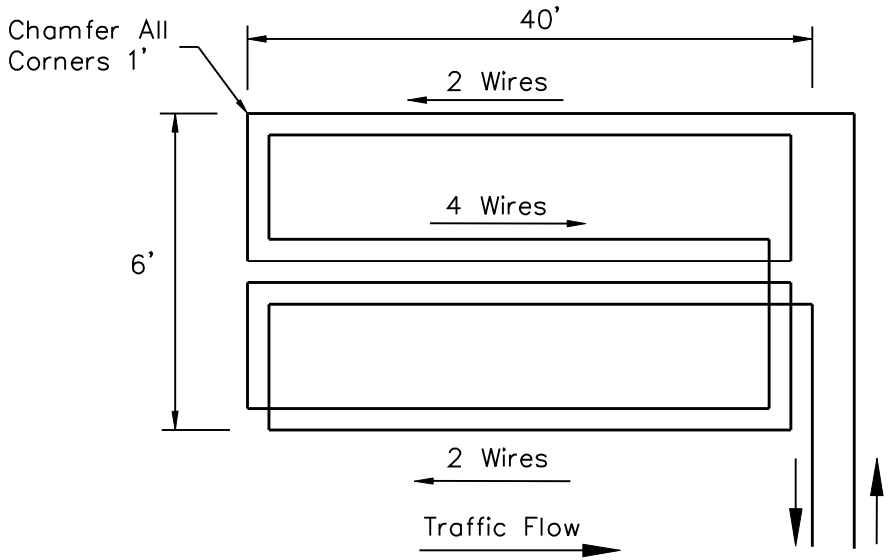

QUADRUPOLE LOOP DETECTOR
For Left Turn Lanes Only

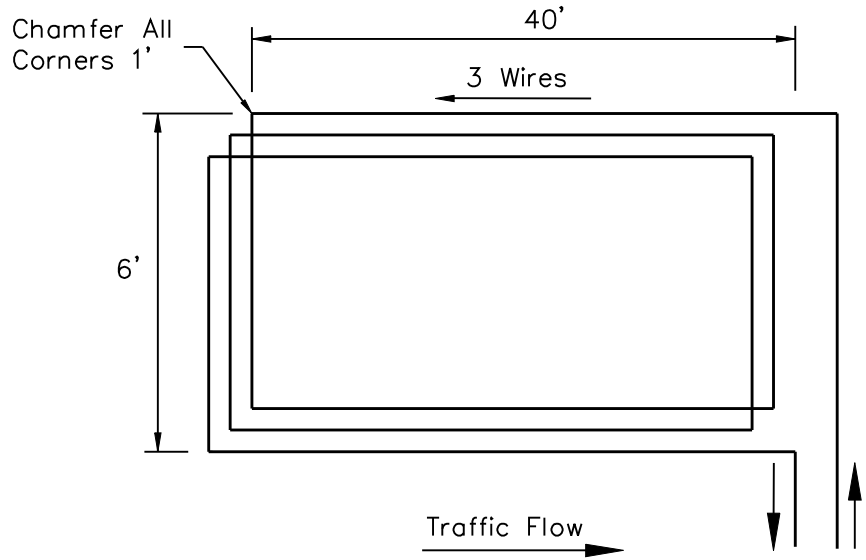

STANDARD LOOP DETECTOR

NOTES:

1. All loop detectors shall be wire-in-duct type wire. (Detect-a-Duct or approved equivalent, #14 stranded inside a 1/4" PVC tubing (IMSA 51-5).
2. All loop detectors shall be centered in the middle of the applicable traffic lane. Loop shall be sufficiently dimensioned on the plans. Loop detectors shall extend five feet into the crosswalk unless directed otherwise by the Traffic Engineering Department.
3. A rectangular loop with 3 turns (6 feet x 40 feet) shall be used for all through lanes.
4. A quadrupole loop with 2 outside turns and 4 inside turns (6 feet x 40 feet) shall be used in all exclusive left-turn lanes. (Wire in middle cut shall run the same direction.
5. Loop detectors shall not be installed in exclusive right turn lanes.
6. The location of permanent count detector loops shall be specified by the Traffic Engineering Department. Count detector loops shall consist of a minimum of 4 turns (6 feet x 6 feet).
7. Pre-formed loop detectors conforming to the latest ADOT specifications shall be used under decorative pavement, "pavers", concrete, or other "special" roadway surfaces, or as directed by the Traffic Engineering Department.
8. Lead-in cable between loop wire and controller shall be latest ADOT specification or approved equivalent (IMSA 50-2).
9. Loop lead-in and splices in pull box shall be twisted and soldered. Griggs Loop Detector Sealant, 3-M Loop Sealant, or approved equivalent shall be used.
10. Loops shall be installed prior to the installation of the final pavement lift (if part of a paving project).
11. Loops shall be inspected and tested prior to acceptance by the City.
12. See ADOT TS 7-1 for installation details.

DETAIL NO.	City of Scottsdale Standard Details	APPROVED BY: Scottsdale Standards & Specifications Committee	LOOP DETECTORS	DETAIL NO.
2137				2137

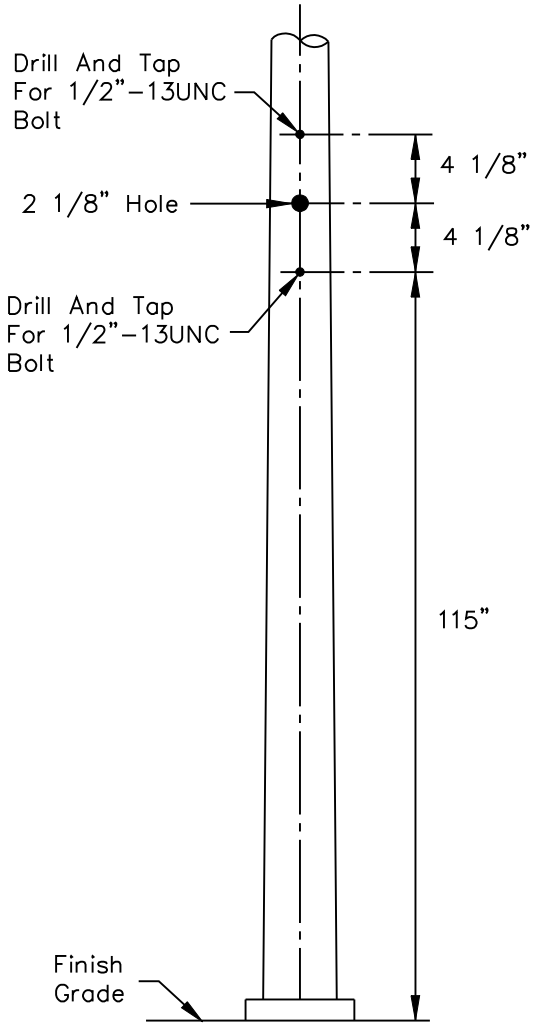

SIDE MOUNT DRILLING DETAIL

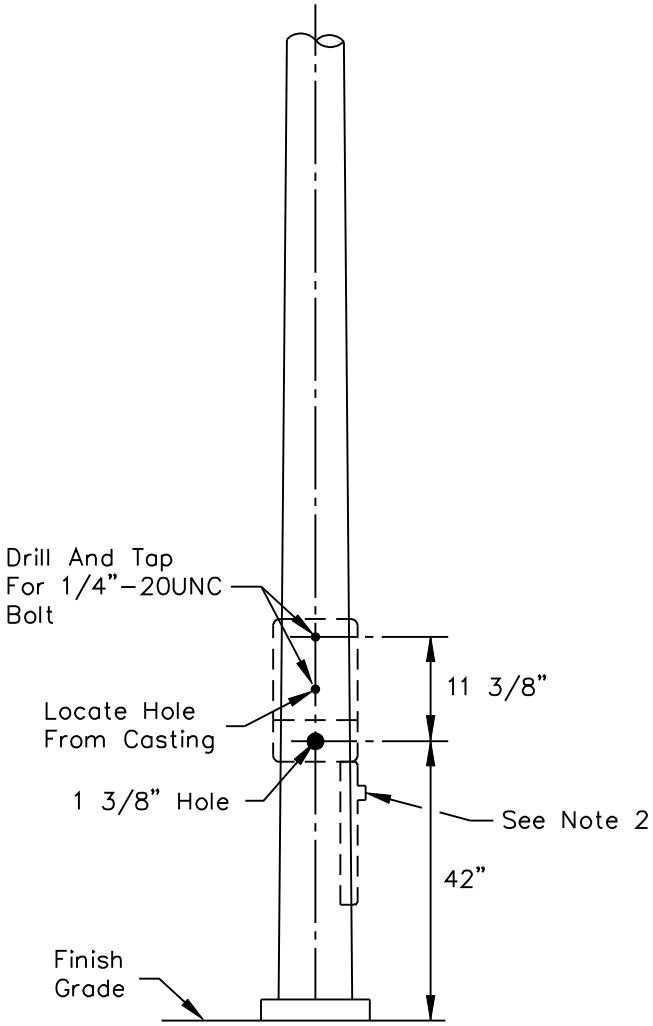

PUSH BUTTON DRILLING DETAIL

NOTES:

1. Drilling of pole to be oriented according to pole layout, or as directed by C.O.S. Engineer in the field.
2. When two pedestrian push button assemblies are mounted on a small diameter pole the lower assembly shall be positioned upside down so that the push button is at the top and the sign is below.
3. Top mounting holes to be field drilled in order to allow for manufacturing variations.
4. Push button shall be A.D.A large target style (ADOT Type I).

DETAIL NO.	City of Scottsdale Standard Details	APPROVED BY: Scottsdale Standards & Specifications Committee	SIGNAL POLE DRILLING DETAIL	DETAIL NO.
2138				2138

REVISED 4/24/07

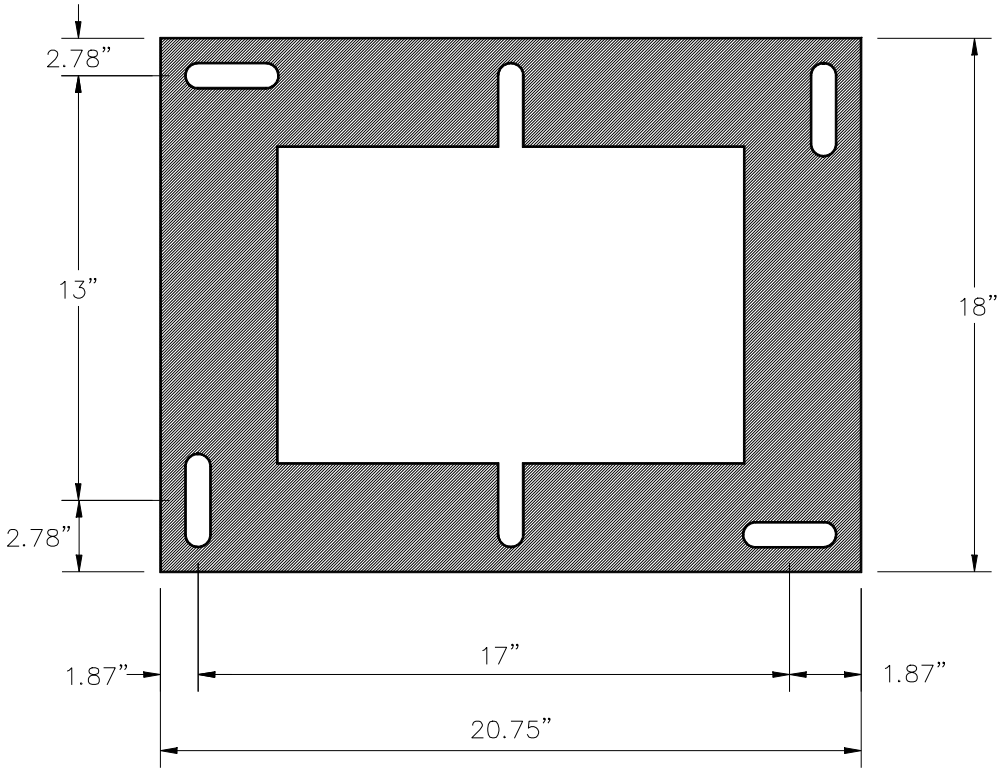

INSIDE VIEW OF BOTH
SIDES OF BASE EXTENDER

Notes:

1. Model 330 cabinet base extenders will include cutouts that will accommodate replacement with all other Scottsdale 330 cabinets and model 336S. These base extenders are available from the cabinet manufacturer. All Scottsdale cabinets are foundation mounted.

2. Foundation must include a 4"x30"x30" concrete pad in front of the cabinet door.

3. The cabinet shall be mounted in such a way that when the technician has the door open and is facing the cabinet, he is also facing the intersection.

4. Cabinet base extender shall have a 12" x 12" removable access panel. Base extender shall be installed so that access panel is on door side of cabinet.

DETAIL NO.	City of Scottsdale Standard Details	APPROVED BY: Scottsdale Standards & Specifications Committee	TRAFFIC SIGNAL CONTROLLER CABINET BASE EXTENDER	DETAIL NO.
2139				2139

REVISED 4/24/07

LOOP AND PEDESTRIAN PUSH BUTTON INPUTS

Slot 1	Slot 2	Slot 3	Slot 4	Slot 5	Slot 6	Slot 7	Slot 8	Slot 9	Slot 10	Slot 11	Slot 12	Slot 13	Slot 14
1 AB Ph 1	3 AB Ph 2	5 AB Ph 3	7 AB Ph 4	9 AB Ph 5	11 AB Ph 6	13 AB Ph 7	15 AB Ph 8	17 AB 1 PPB	19 AB 3 PPB	21 AB RRPre	23 AB AdvEn	25 AB EV A	27 AB Stop Time
2 AB Ph 1	4 AB Ph 2	6 AB Ph 3	8 AB Ph 4	10 AB Ph 5	12 AB Ph 6	14 AB Ph 7	16 AB Ph 8	18 AB 5 PPB	20 AB 7 PPB	22AB Flash	24 AB Adv	26 AB EV B	28 AB 6 Call
Det Loops	Det Loops	Det Loops	Det Loops	Det Loops	Det Loops	Det Loops	Det Loops	Ped Push Buttons	Ped Push Buttons	-------	-------	Pre-Empt	Slot 14 ------- Slot 14

1. All Scottsdale model 330 cabinet input racks have 14 slots.
2. Slots 1–8 are for vehicle detector loops.
3. Phase 4 loops are terminated on slot 4 (7A&B and/or 8A&B).
4. Phase 4 pedestrian push button is terminated on 19A and ppb neutral on 19B.
5. 19B shall have a jumper to the neutral bar.
6. All two phase intersections are to be wired to phases 2 and 4.
7. Field output wiring for 2 phase signals shall be wired to 2R, 2Y, 2G and 4R, 4Y, 4G.
8. Ped field wiring shall be wired to 9R, 9G (Phase 2 Ped) and 10R, 10G (Phase 4 Ped).
9. Call COS Traffic Signals (480)312–5635 prior to wiring cabinet for instructions for intersections with more than 2 phases.

MAIN DIRECTIONS

Direction	Color
WB	Blue
EB	Green
NB	Red
SB	Yellow

LEFT TURN DIRECTIONS (Main Color + White)

Direction	Color
WBLT	Blue + White
EBLT	Green + White
NBLT	Red + White
SBLT	Yellow + White

RIGHT TURN DIRECTIONS (Main Color + Black)

Direction	Color
WBRT	Blue + Black
EBRT	Green + Black
NBRT	Red + Black
SBRT	Yellow + Black

Color Of Wire For Power/Neutrals/Pushbuttons

Wire	Color
AC+ Power	Black
AC- (Neutral)	White
24V Pushbutton	Orange, Stranded

WBLT = West Bound Left Turn and shall be the phase for vehicles facing west and turning to south
EBLT = East Bound Left Turn and shall be the phase for vehicles facing east and turning to north
NBLT = North Bound Left Turn and shall be the phase for vehicles facing north and turning to west
SBLT = South Bound Left Turn and shall be the phase for vehicles facing south and turning to east

WBRT = West Bound Right Turn and shall be the phase for vehicles facing west and turning to north
EBRT = East Bound Right Turn and shall be the phase for vehicles facing east and turning to south
NBRT = North Bound Right Turn and shall be the phase for vehicles facing north and turning to east
SBRT = South Bound Right Turn and shall be the phase for vehicles facing south and turning to west

NOTE:

1. ½" Expansion Joint, ASTM D-1751 Per MAG Section 729.

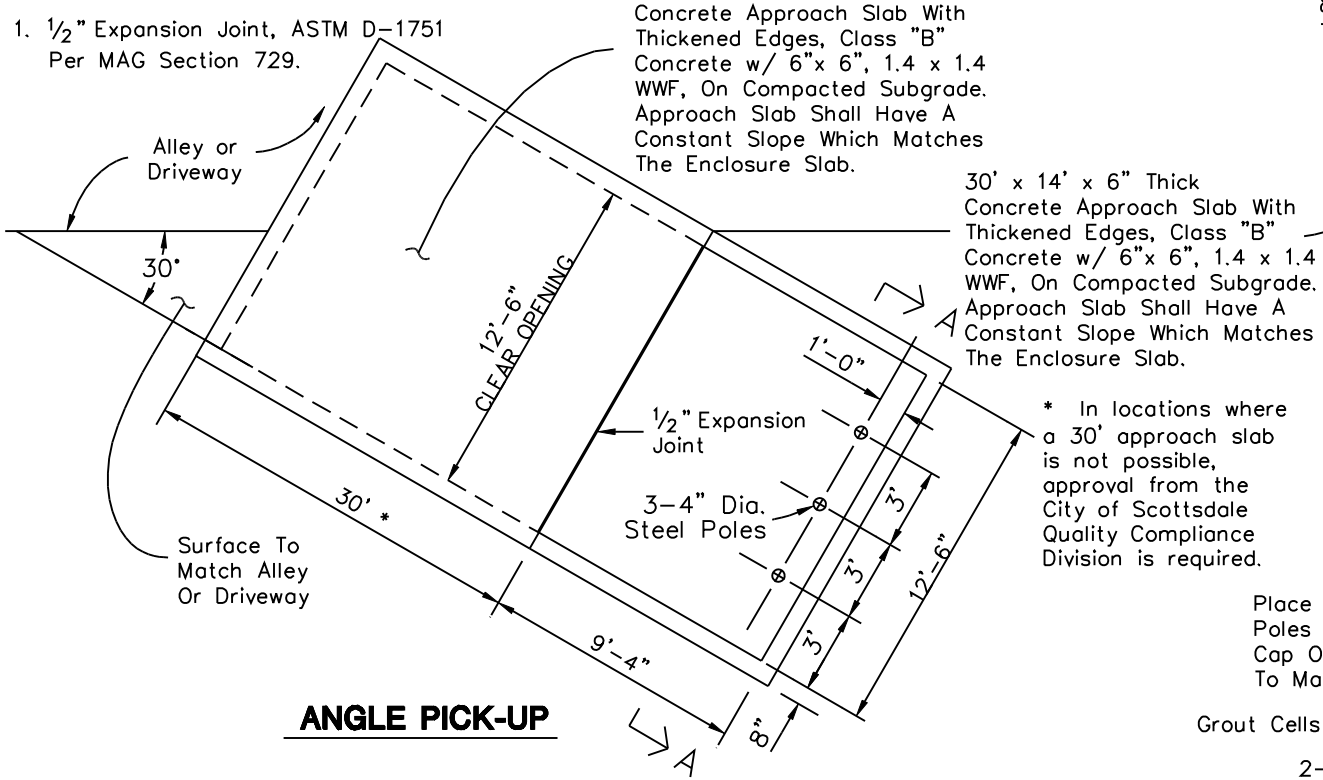

* In locations where a 30' approach slab is not possible, approval from the City of Scottsdale Quality Compliance Division is required.

ANGLE PICK-UP

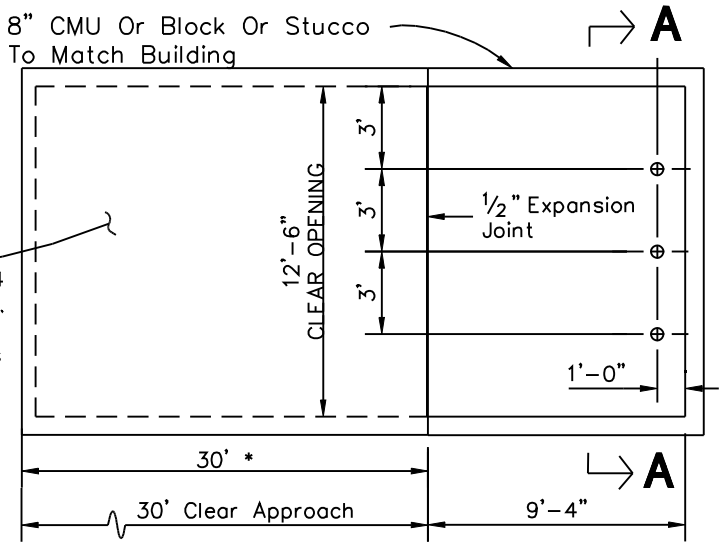

HEAD ON PICK-UP

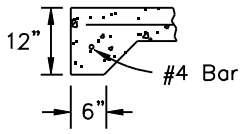

APPROACH SLAB THICKENED EDGE DETAIL

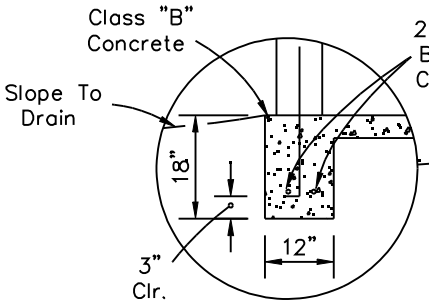

OR Alternate Footing

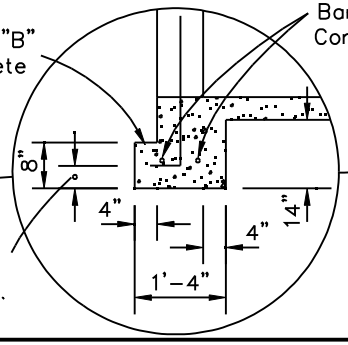

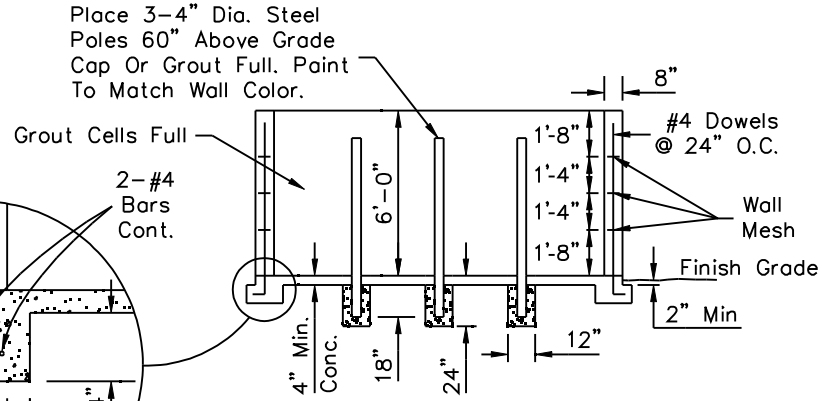

SECTION A-A

REVISED 5/9/02

DETAIL NO.	City of Scottsdale Standard Details	APPROVED BY:	REFUSE ENCLOSURE	DETAIL NO.
2146-1		Scottsdale Standards & Specifications Committee		2146-1

REVISED 5/9/02

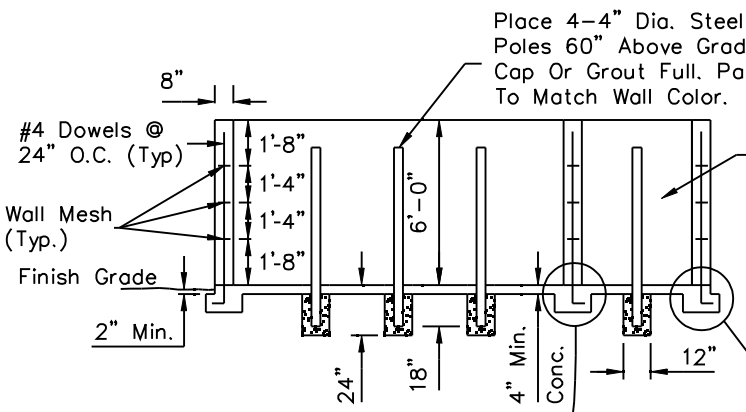

SECTION A-A

30' x 18' x 6" Thick Concrete Approach Slab With Thickened Edges, Class "B" Concrete w/ 6"x 6"x 1.4 x 1.4 WWF, On Compacted Subgrade. Approach Slab Shall Have A Constant Slope Which Matches The Enclosure Slab.

* In locations where a 30' approach slab is not possible, approval from the City of Scottsdale Quality Compliance Division is required.

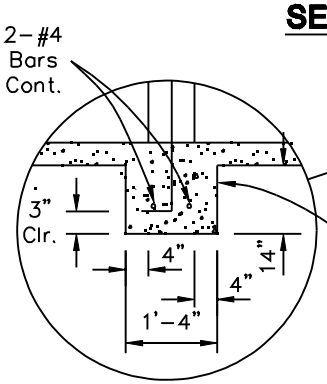

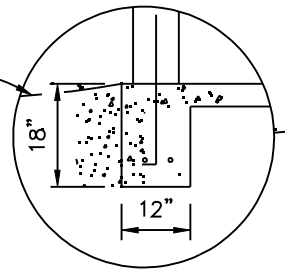

OR

Alternate Footing

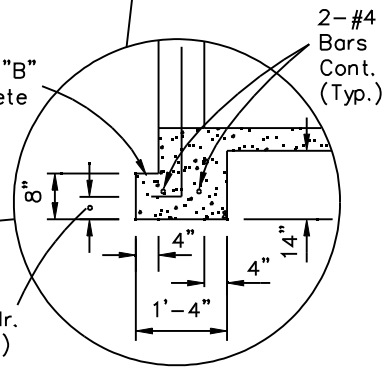

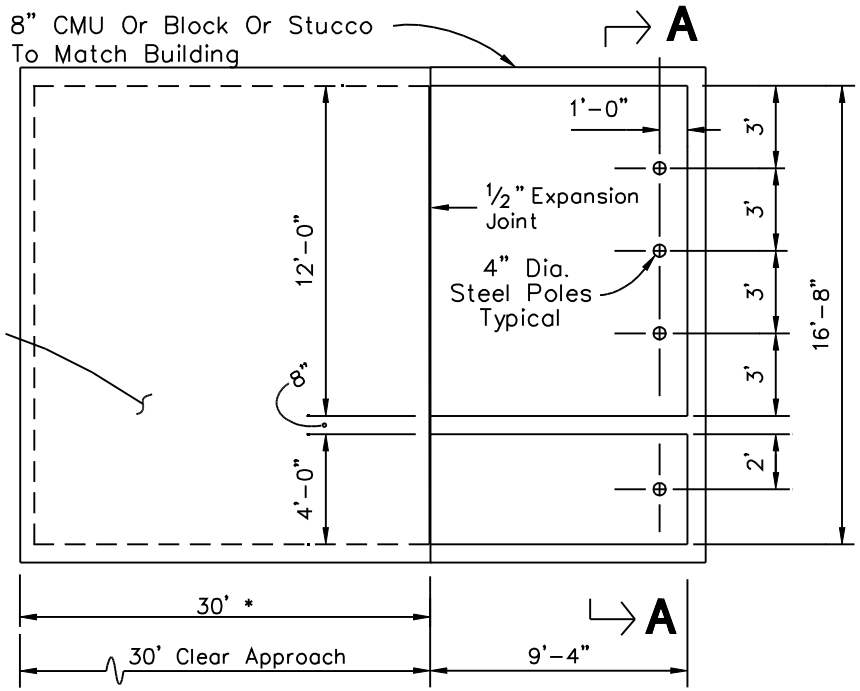

PLAN

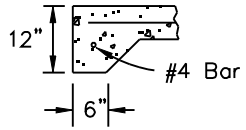

APPROACH SLAB THICKENED EDGE DETAIL

NOTES:

1. Enclosure For Angle Pick-up Similar To COS Detail 2146-1
2. 1/2" Expansion Joint, ASTM D-1751 Per MAG Section 729.

DETAIL NO.		APPROVED BY:		DETAIL NO.
2146-2	City of Scottsdale Standard Details	Scottsdale Standards & Specifications Committee	REFUSE ENCLOSURE W/ GREASE CONTAINMENT AREA	2146-2

REVISED 5/9/02

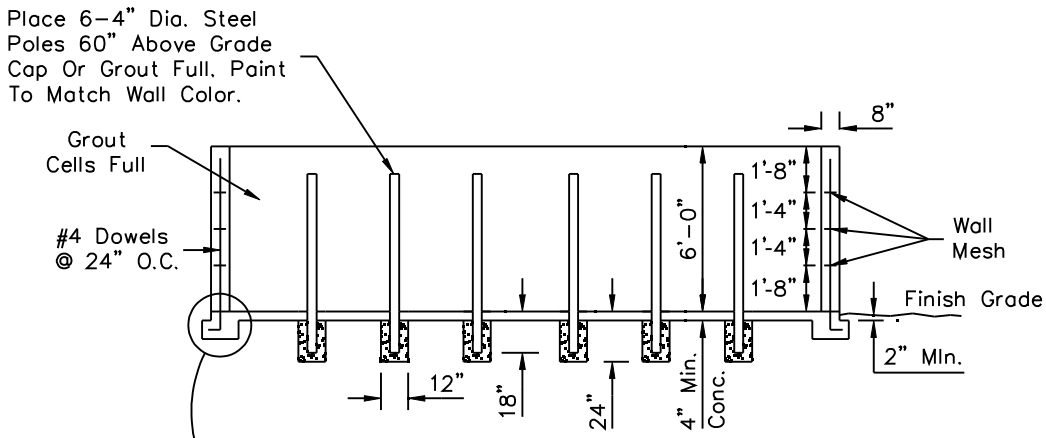

SECTION A-A

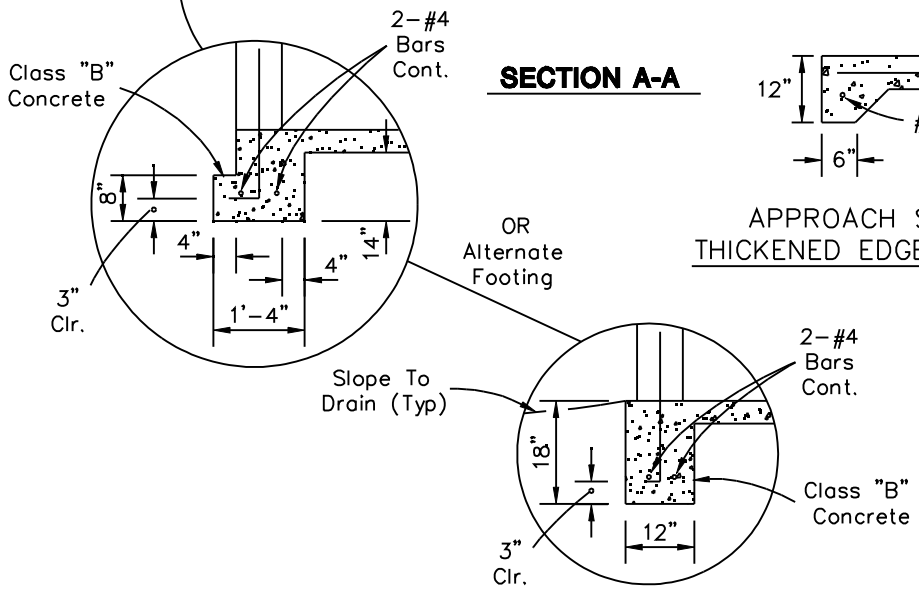

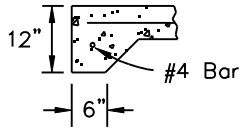

APPROACH SLAB
THICKENED EDGE DETAIL

30' x 23' x 6" Thick Concrete Approach Slab With Thickened Edges, Class "B" Conc. w/ 6"x 6", 1.4 x 1.4 WWF, On Compacted Subgrade. Approach Slab Shall Have A Constant Slope Which Matches The Enclosure Slab.

* In locations where a 30' approach slab is not possible, approval from the City of Scottsdale Quality Compliance Division is required.

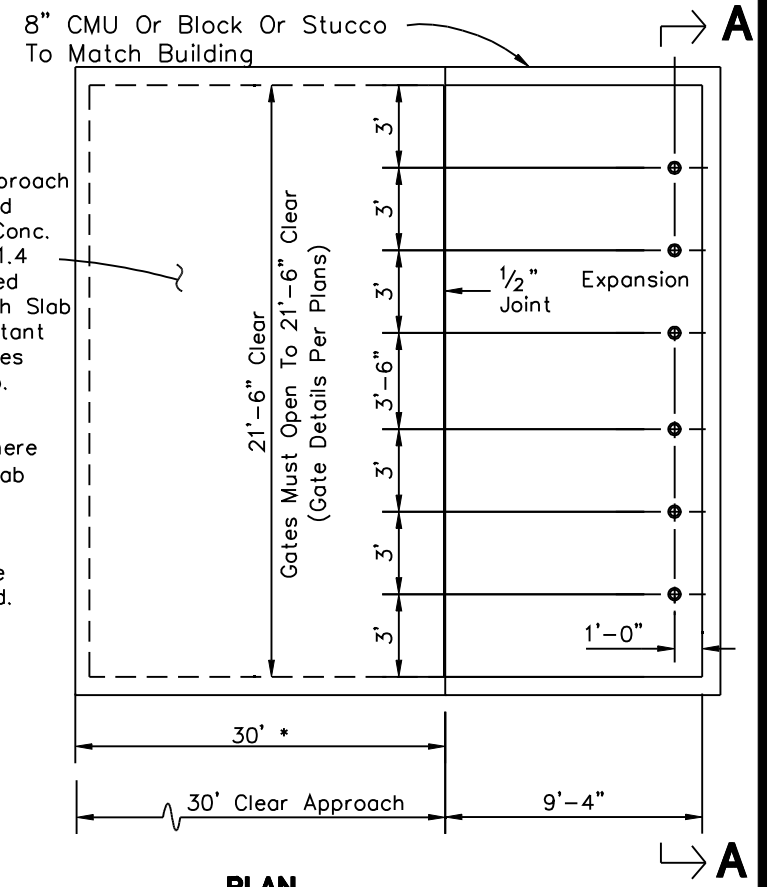

PLAN

NOTE:

1. Double Enclosure For Angle Pick–Up Similar To COS Det. 2146–1
2. ½" Expansion Joint, ASTM D–1751 Per MAG Section 729.

DETAIL NO.		APPROVED BY:		DETAIL NO.
2147-1	City of Scottsdale Standard Details	Scottsdale Standards & Specifications Committee	DOUBLE REFUSE ENCLOSURE	2147-1

REVISED 5/9/02

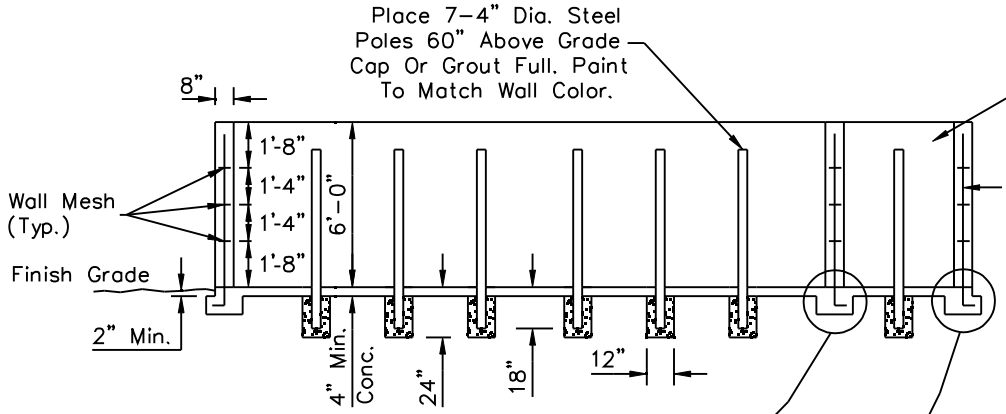

SECTION A-A

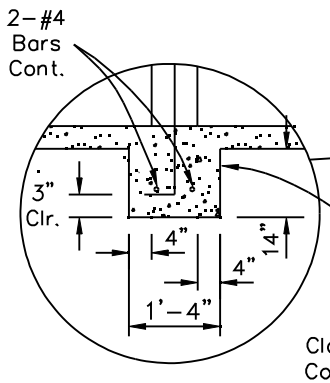

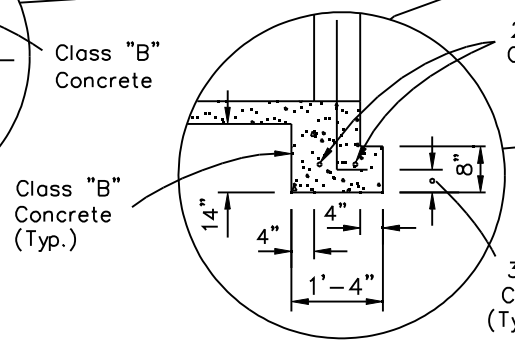

OR Alternate Footing

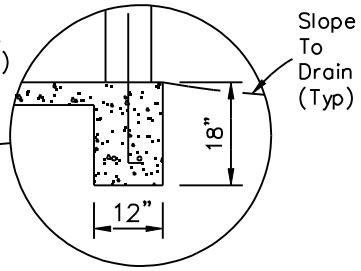

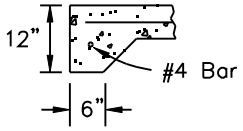

APPROACH SLAB THICKENED EDGE DETAIL

NOTES:

1. Double Enclosure For Angle Pick-Up Similar To COS Det. 2146-1
2. ½" Expansion Joint, ASTM D-1751 Per MAG Section 729.

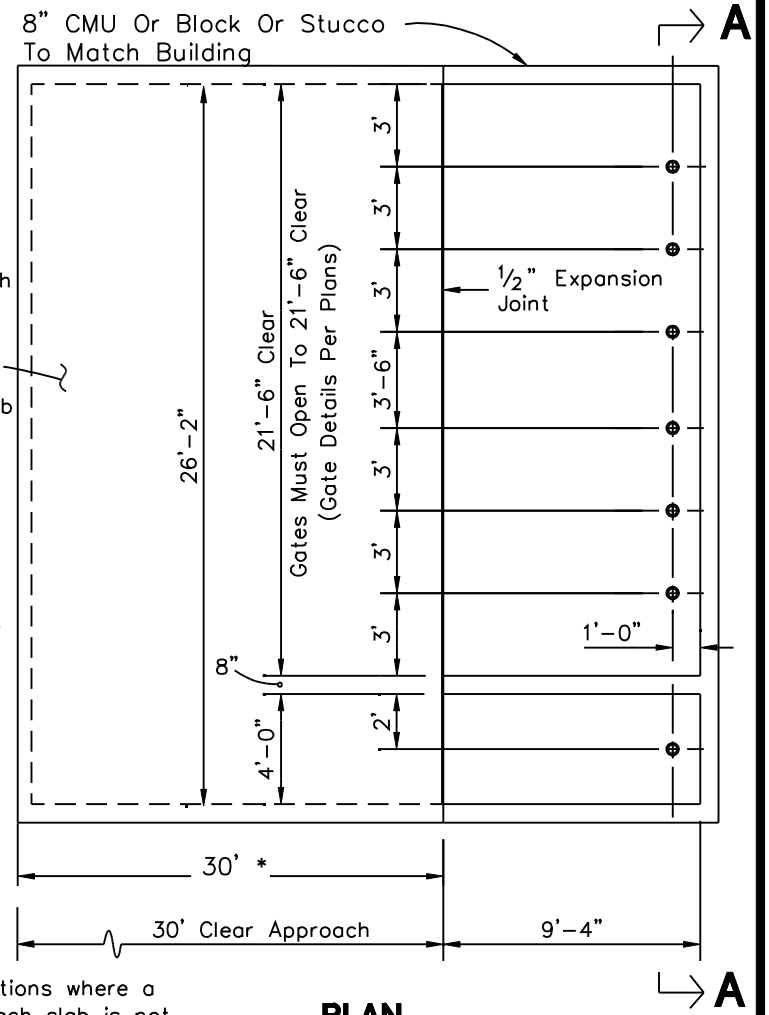

* In locations where a 30' approach slab is not possible, approval from the City of Scottsdale Quality Compliance Division is required.

PLAN

DETAIL NO.		APPROVED BY:		DETAIL NO.
2147-2	City of Scottsdale Standard Details	Scottsdale Standards & Specifications Committee	DOUBLE REFUSE ENCLOSURE W/ GREASE CONTAINMENT AREA	2147-2

REVISED 4/12/05

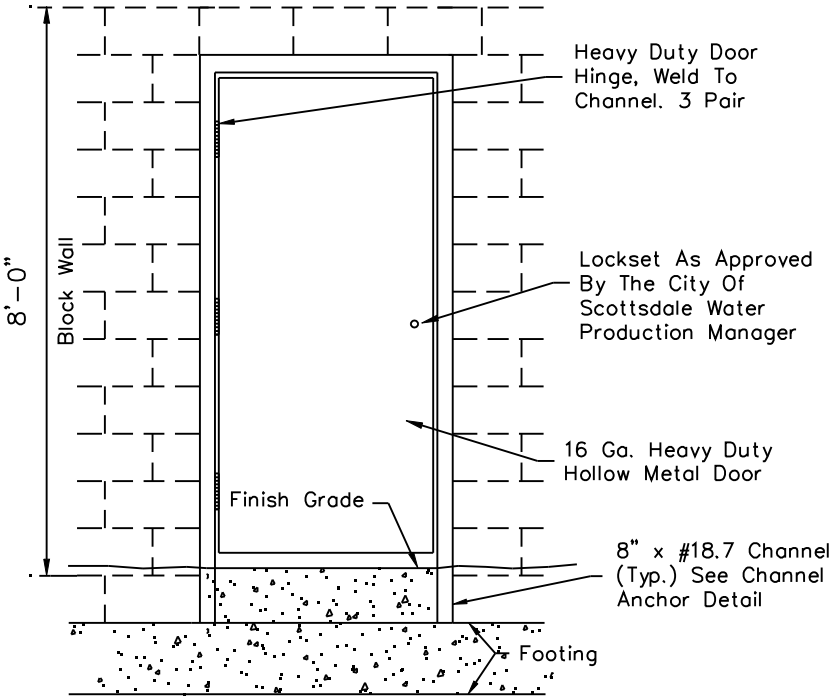

HINGED DOOR

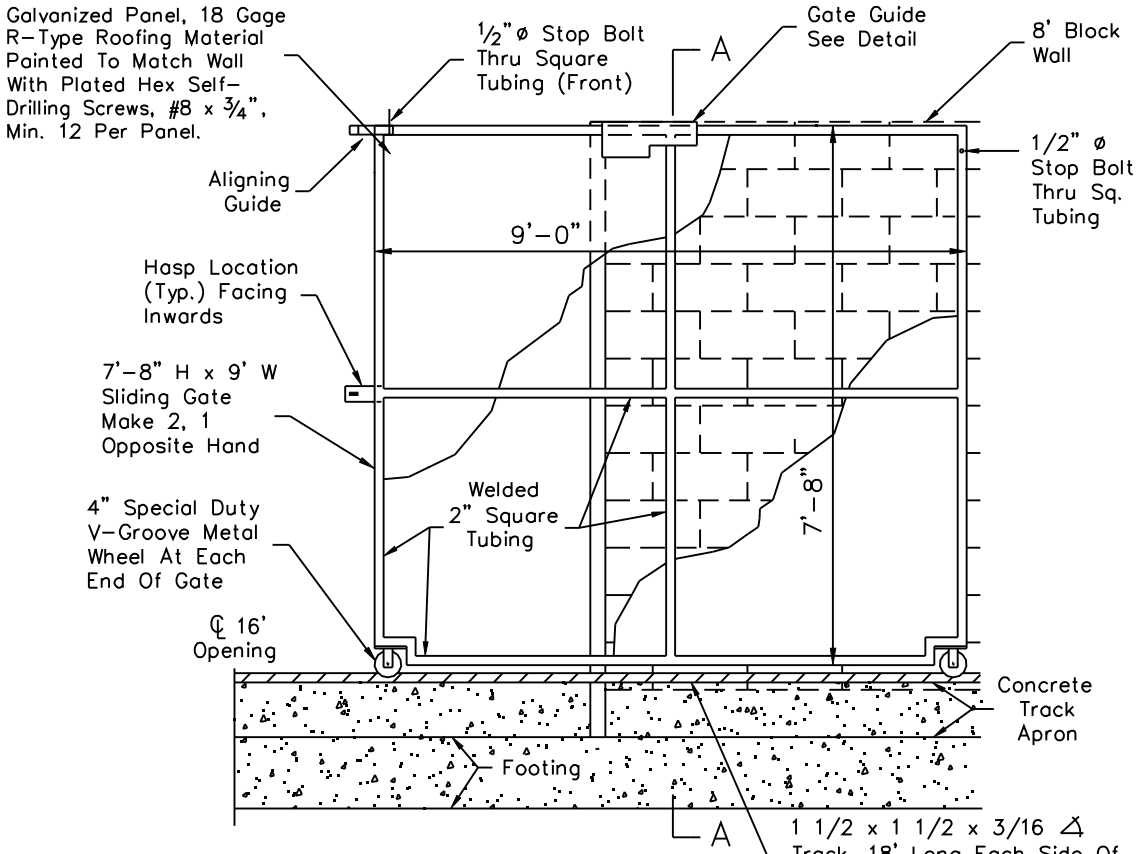

ELEVATION

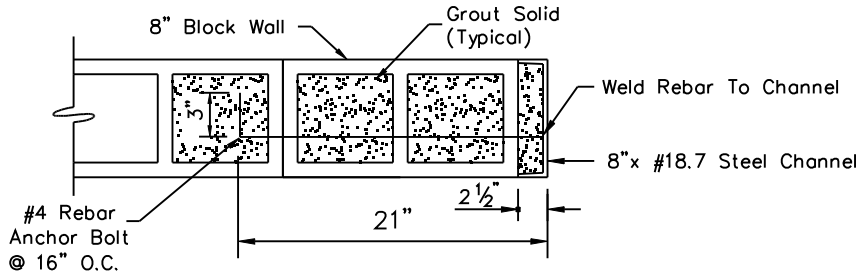

CHANNEL ANCHOR DETAIL

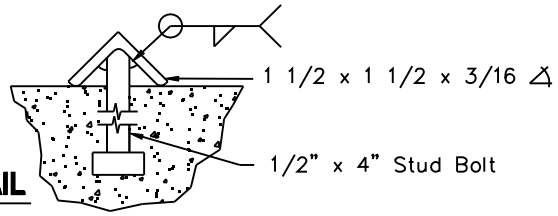

TRACK DETAIL

DETAIL NO.	City of Scottsdale Standard Details	APPROVED BY:	16' SLIDING GATE & HINGED DOOR	DETAIL NO.
2165-1		Scottsdale Standards & Specifications Committee		2165-1

REVISED 4/12/05

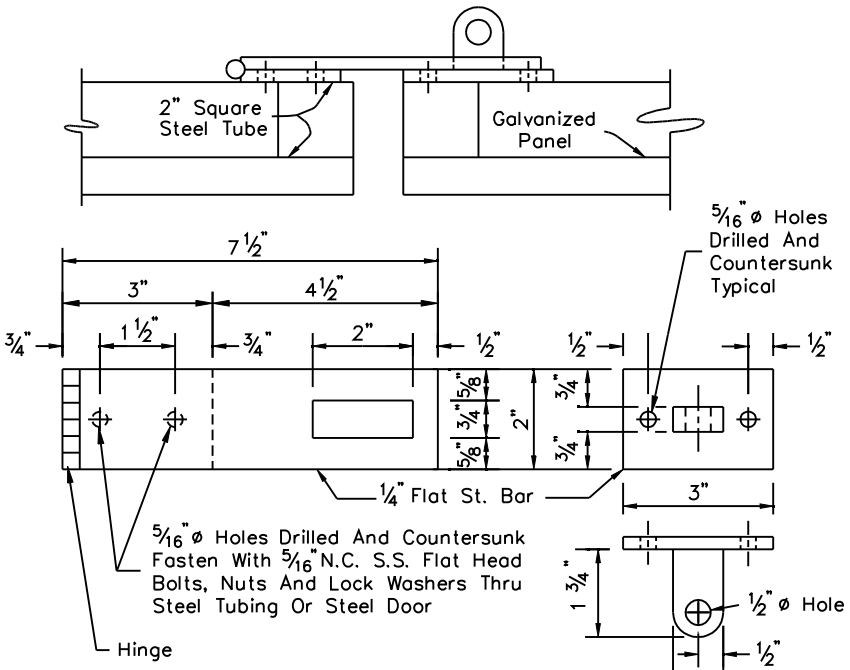

HASP DETAIL

N.T.S.

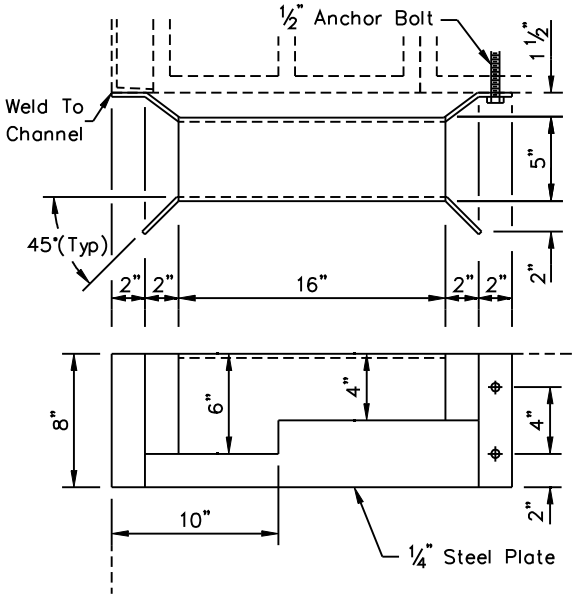

GATE GUIDE DETAIL

(Make 2, 1 Opposite Hand)

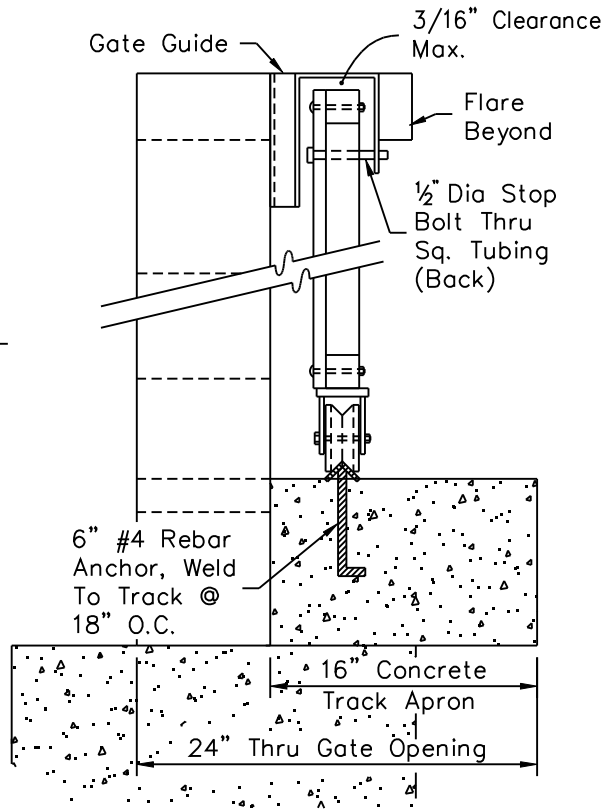

SECTION A-A

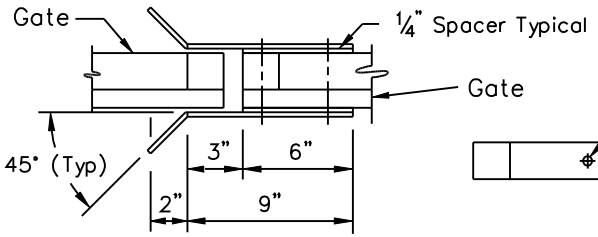

PLAN

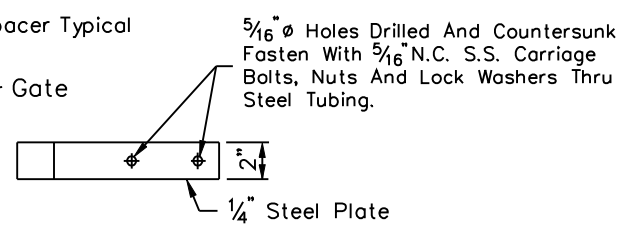

ELEVATION

ALIGNING GUIDE DETAIL

2 Required

NOTES:

1. Contractor shall prime and paint all metal surfaces. Before application, the color and manufacturer of the paint shall be approved by the City.
2. Prior to painting, all surfaces shall be cleaned free of concrete, mortar, rust, dirt and any other objectionable materials.
3. Apply one (1) primer coat and two (2) exterior alkyd gloss enamel coats to metal.

DETAIL NO.	City of Scottsdale Standard Details	APPROVED BY:	16' SLIDING GATE	DETAIL NO.
2165-2		Scottsdale Standards & Specifications Committee		2165-2