REVISED 4/24/07

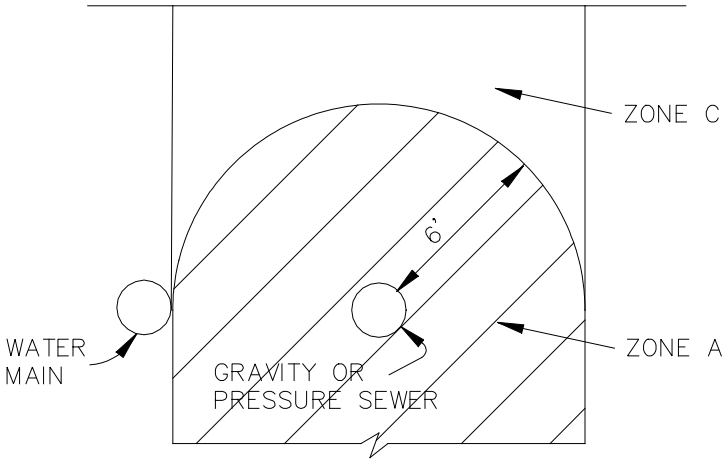

PARALLEL INSTALLATION
GRAVITY OR PRESSURE SEWER

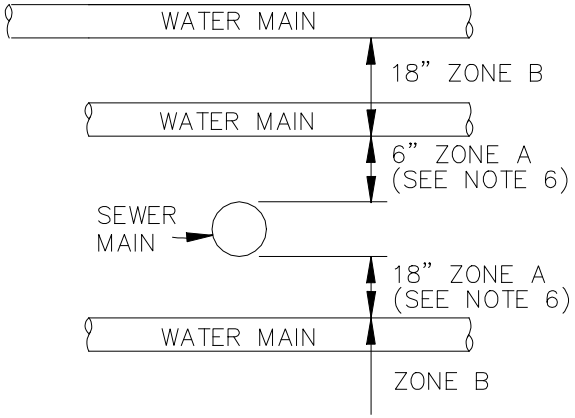

CROSSING INSTALLATION

Notes:

1. SEPARATION DISTANCES AND/OR EXTRA PROTECTION SHALL BE REQUIRED TO PROTECT WATER MAINS FROM CONTAMINATION BY SANITARY SEWER MAINS.

2. SEE CROSS SECTION DETAIL FOR LIMITS OF SEPARATION/EXTRA PROTECTION. ALL DISTANCES ARE MEASURED PERPENDICULARLY FROM THE OUTSIDE OF THE PIPES.

   A. NO WATER MAINS SHALL FALL WITHIN ZONE A.

   B. EXTRA PROTECTION WILL BE REQUIRED WHEN THE WATER MAIN FALLS WITHIN ZONE B. EXTRA PROTECTION SHALL CONSIST OF CONSTRUCTING SANITARY SEWER MAINS WITH MECHANICAL JOINT OR RESTRAINED JOINT DUCTILE IRON PIPE. DUCTILE IRON PIPE SHALL COMPLY WITH THE REQUIREMENTS FOR SEWER INSTALLATION. IN A CROSSING, THE NUMBER OF JOINTS SHALL BE HELD TO A MINIMUM WITH ONE FULL JOINT OF PIPE CENTERED OVER/UNDER THE OTHER. AN ALTERNATIVE PROTECTION MAY CONSIST OF ENCASING SEWER MAINS IN REINFORCED CONCRETE PER MAG STD. DETAIL 404–3.

   C. NO ADDITIONAL PROTECTION WILL BE REQUIRED OUTSIDE OF ZONES A AND B.

   D. WATER MAINS PERMITTED IN ZONE C ONLY WITH WRITTEN PERMISSION FROM THE WATER RESOURCES DEPARTMENT.

3. SEPARATION REQUIREMENTS FOR 4" OR 6" INDIVIDUAL HOUSE SERVICE CONNECTIONS SHALL COMPLY WITH THE PLUMBING CODES ADOPTED BY THE CITY.

4. RECLAIMED WATER SHALL BE CONSIDERED AS POTABLE WATER WHEN PLACED NEXT TO A SANITARY SEWER AND CONSIDERED A PRESSURE OR FORCE SANITARY SEWER MAIN, WHEN PLACED NEXT TO A POTABLE WATER MAIN.

5. CLASS 'C' CONCRETE AS PER SECTION 725.

6. ZONE A IS 24" WHERE WATER MAINS CROSS PRESSURE SEWER MAINS.

7. THIS DRAWING REVISES MAG STD. DETAIL 401–1 ONLY. MAG STD. DETAILS 404–2 & 404–3 REMAINS INTACT.

DETAIL NO.	City of Scottsdale Standard Details	APPROVED BY:	WATER & SANITARY SEWER SEPARATION/PROTECTION	DETAIL NO.
2401		Scottsdale Standards & Specifications Committee		2401

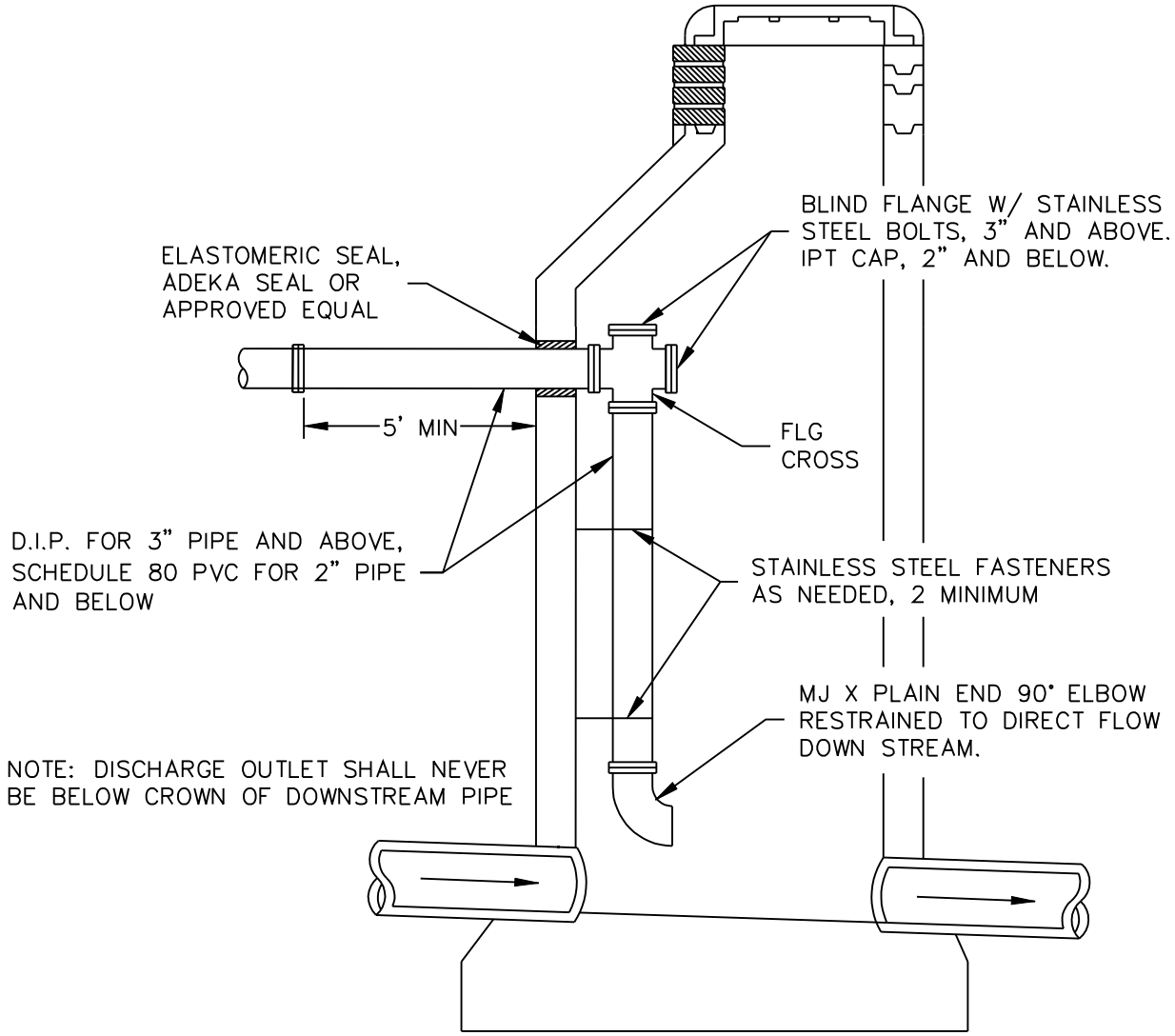

DETAIL NO.	City of Scottsdale Standard Details	APPROVED BY:	FORCE MAIN DISCHARGE MANHOLE	DETAIL NO.
2402		Scottsdale Standards & Specifications Committee		2402

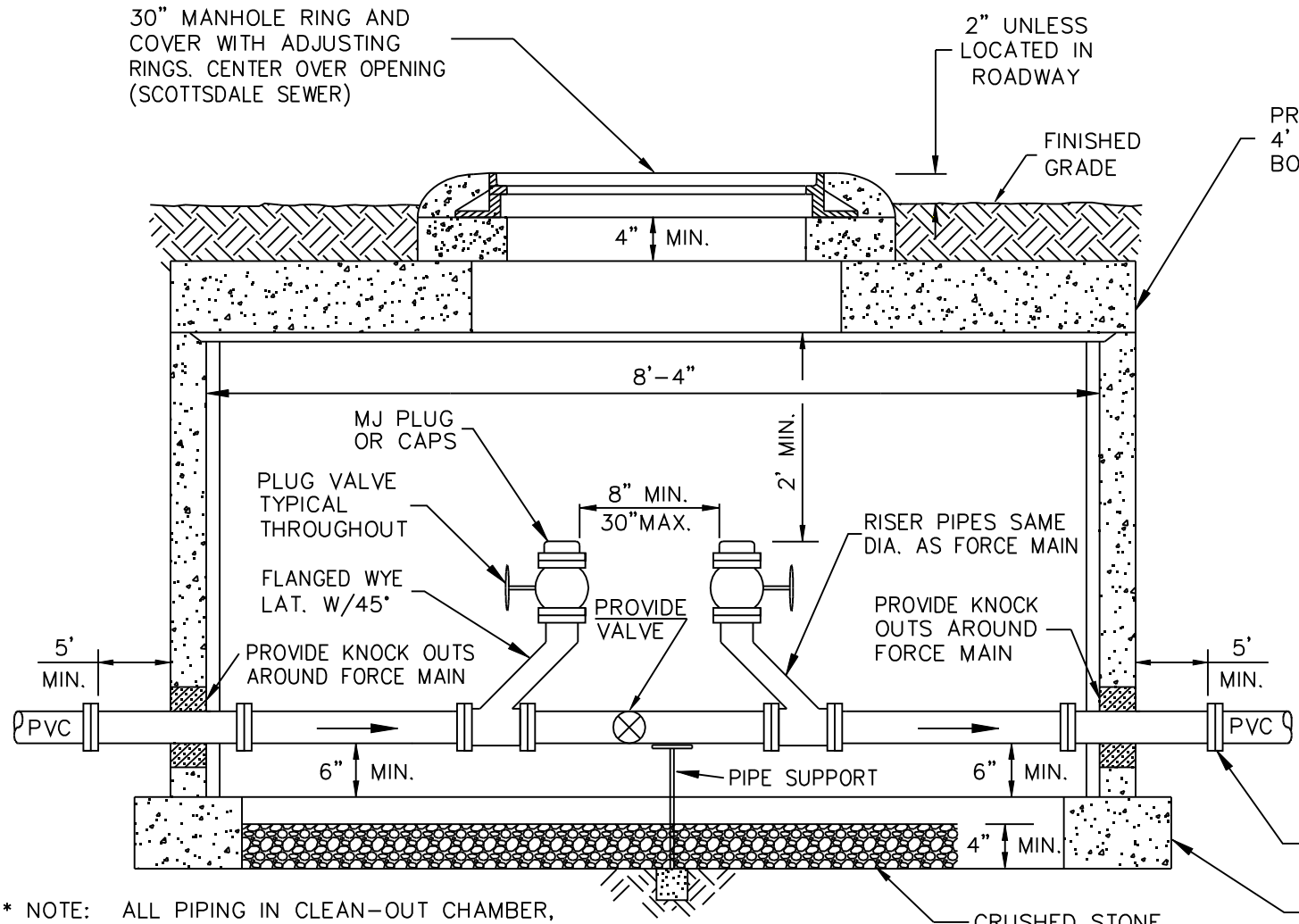

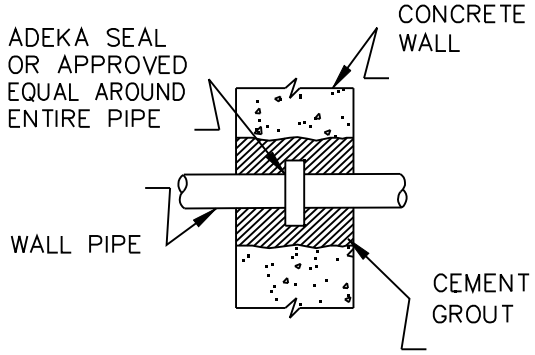

SEAL DETAIL

NOTE: TO BE USED FOR ALL PIPES PASSING THROUGH WALLS.

* NOTE: ALL PIPING IN CLEAN-OUT CHAMBER, EXCEPT AS NOTED, TO BE DUCTILE IRON CONNECTED WITH FLANGED JOINTS AND STAINLESS STEEL BOLTS.

DETAIL NO.	City of Scottsdale Standard Details	APPROVED BY:	TWO-WAY FORCE MAIN CLEAN-OUT - 3" AND ABOVE	DETAIL NO.
2403		Scottsdale Standards & Specifications Committee		2403

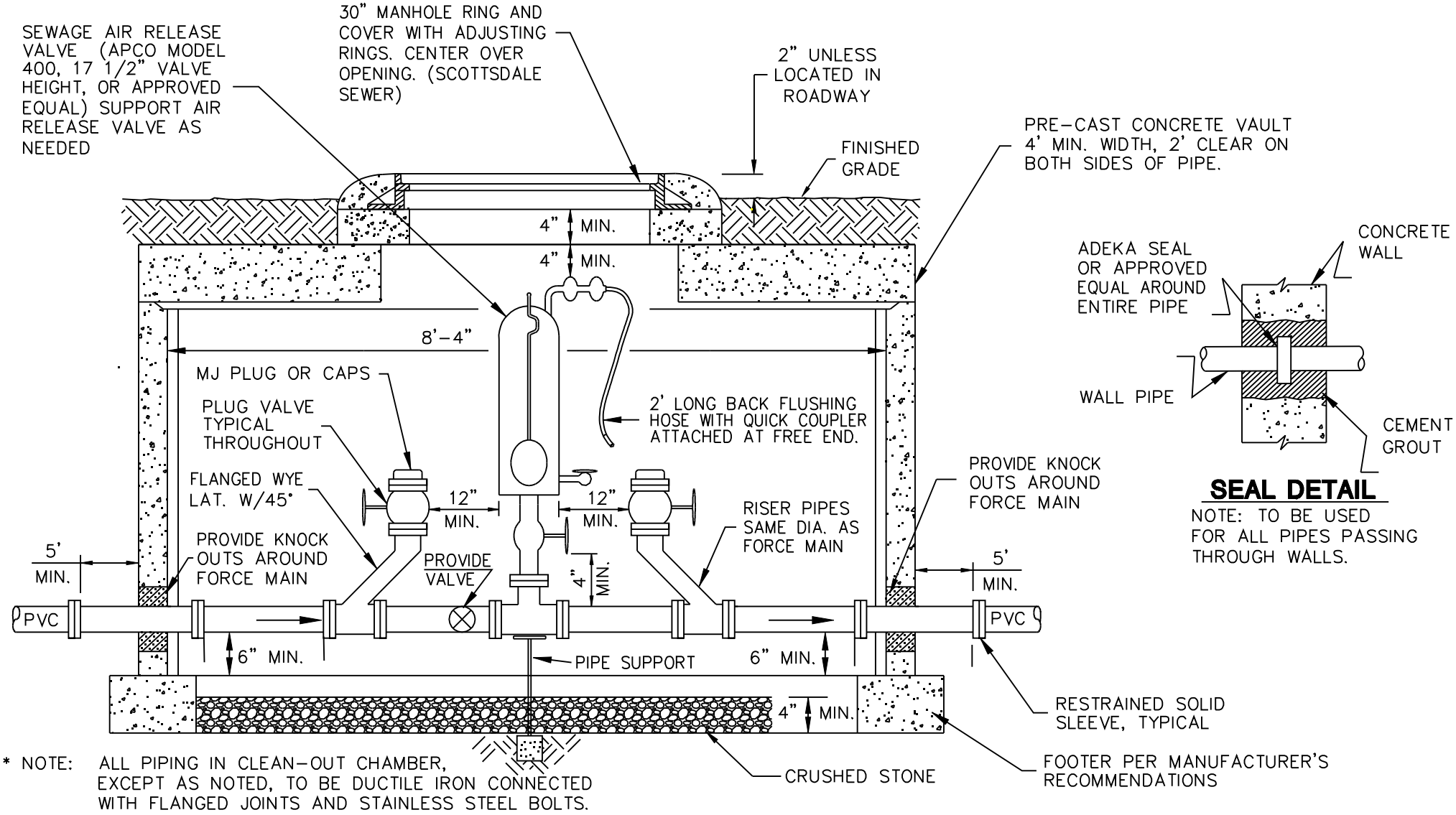

* NOTE: ALL PIPING IN CLEAN-OUT CHAMBER, EXCEPT AS NOTED, TO BE DUCTILE IRON CONNECTED WITH FLANGED JOINTS AND STAINLESS STEEL BOLTS.

DETAIL NO.	City of Scottsdale Standard Details	APPROVED BY:	FORCE MAIN CLEAN-OUT W/ SEWAGE AIR RELEASE VALVE	DETAIL NO.
2404		Scottsdale Standards & Specifications Committee		2404

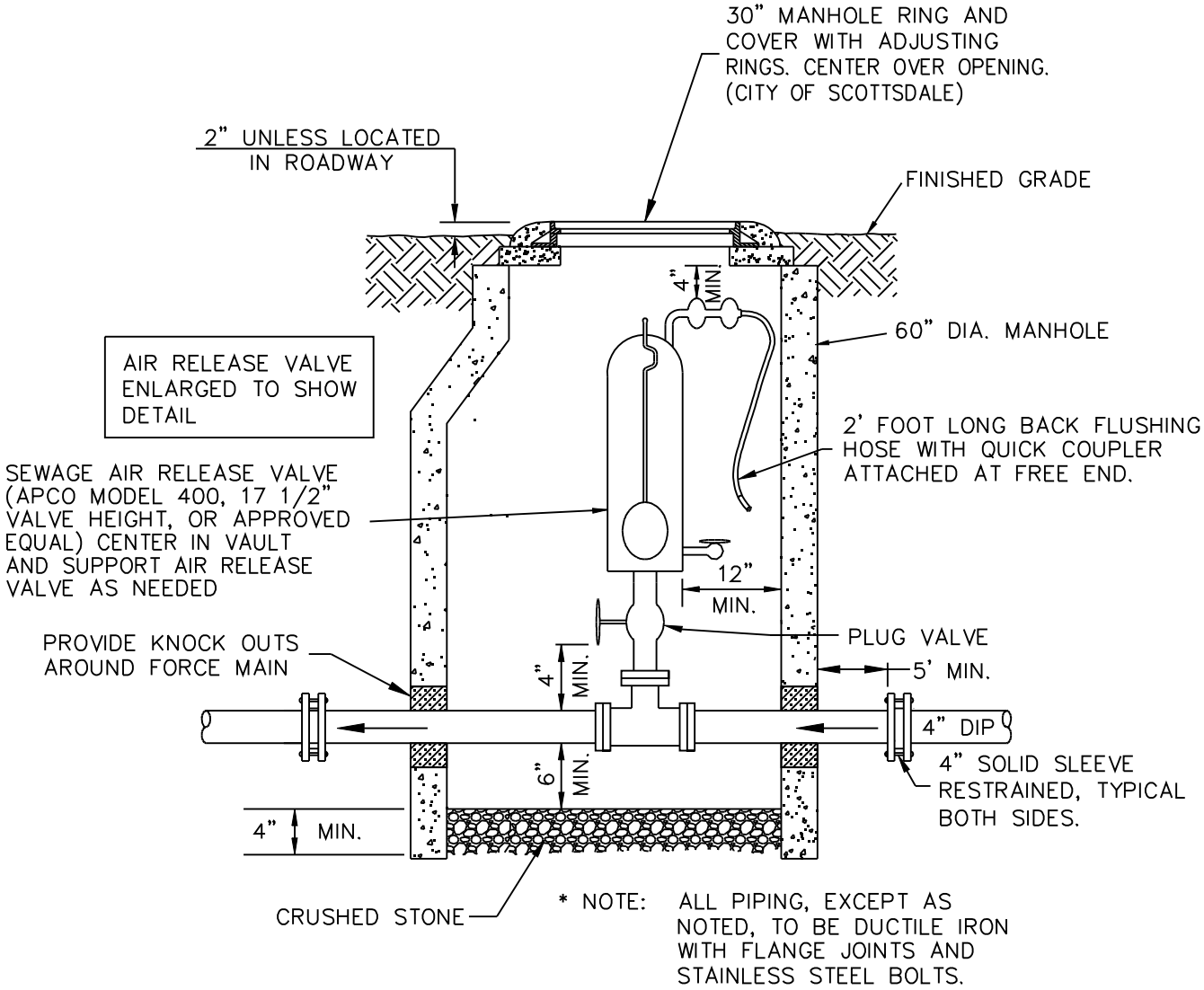

* NOTE: ALL PIPING, EXCEPT AS NOTED, TO BE DUCTILE IRON WITH FLANGE JOINTS AND STAINLESS STEEL BOLTS.

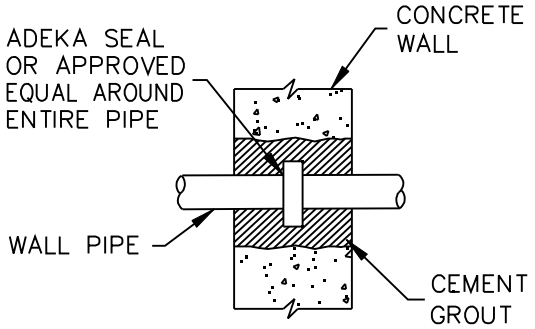

SEAL DETAIL

NOTE: TO BE USED FOR ALL PIPES PASSING THROUGH WALLS.

DETAIL NO.	City of Scottsdale Standard Details	APPROVED BY:	SEWER AIR RELEASE VALVE	DETAIL NO.
2405		Scottsdale Standards & Specifications Committee		2405

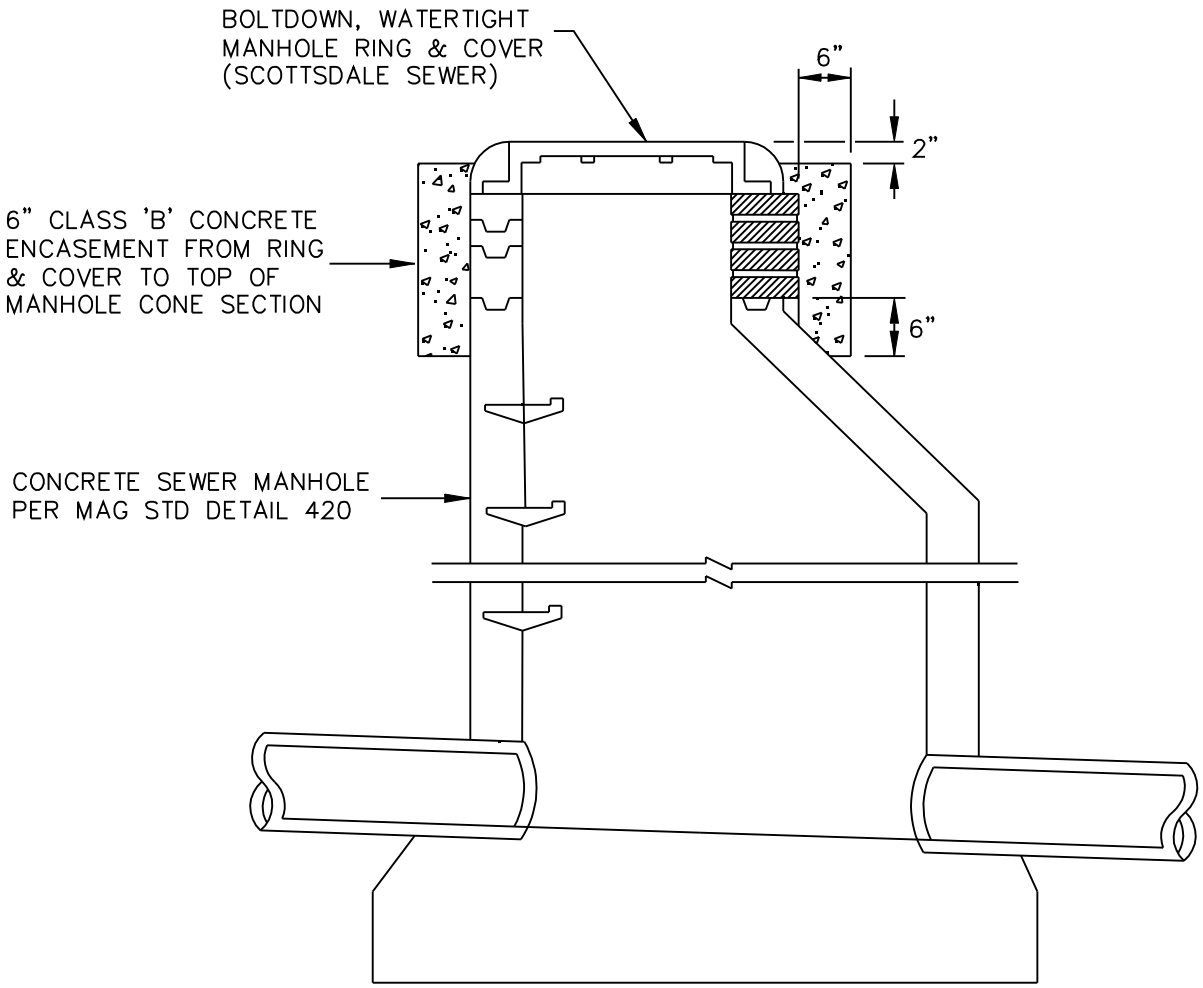

DETAIL NO.	City of Scottsdale Standard Details	APPROVED BY: Scottsdale Standards & Specifications Committee	WATER TIGHT CONCRETE SEWER MANHOLE	DETAIL NO.
2420				2420

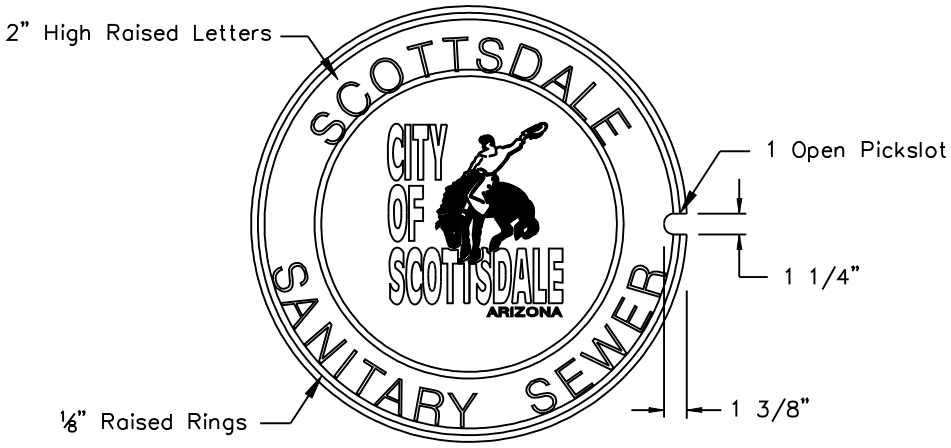

TOP VIEW

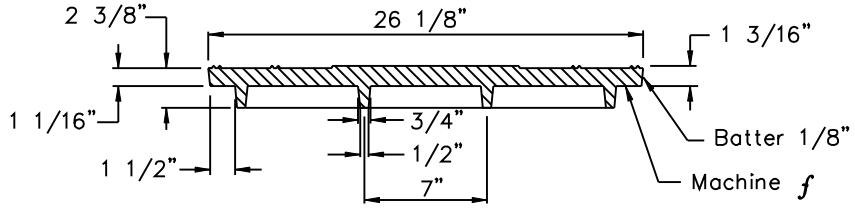

SECTION OF COVER

24" MANHOLE COVER

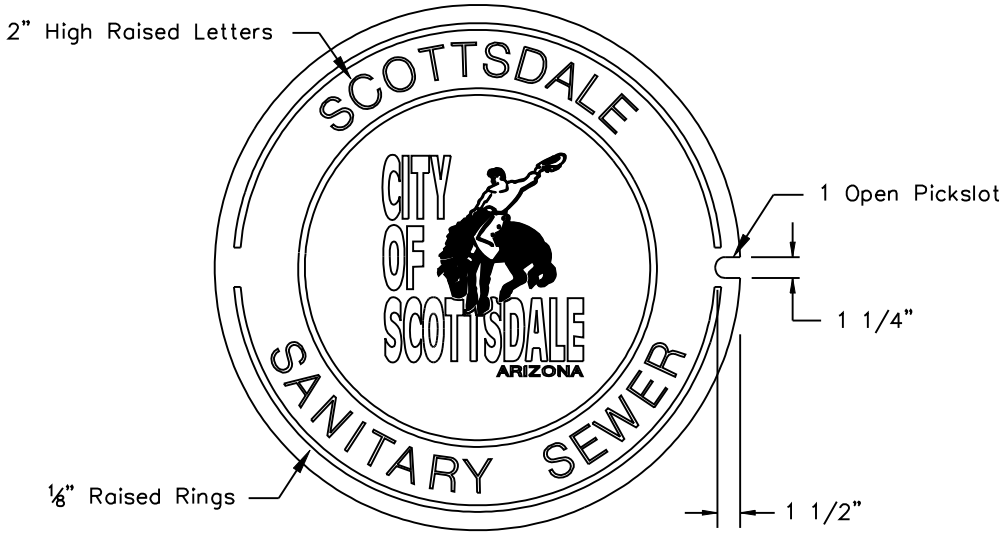

TOP VIEW

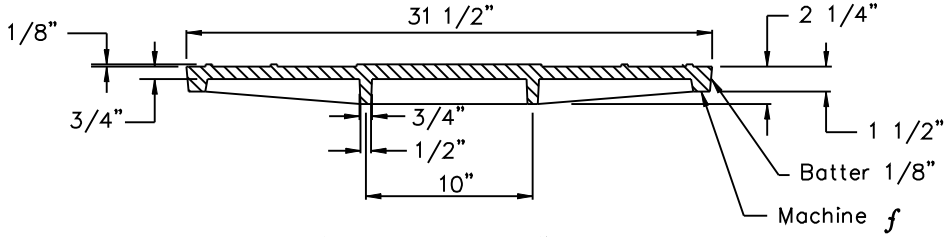

SECTION OF COVER

30" MANHOLE COVER

NOTES

1. Material: Cast Gray Iron ASTM A-48, Class 35B, Unpainted
2. The Total Width Of Individual Letters To Be Such That Letters And Words Are Equally Spaced And Balanced.
3. Letters To Be 2" In Height And Raised 1/8" Above Level Of Cover. Type Of Letters To Be Submitted For Approval.
4. Weight Of Castings Shall Be No More Than 2% Less Than Weight Specified. Castings Shall Conform To M.A.G. Section 787.

DETAIL NO.	City of Scottsdale Standard Details	APPROVED BY: Scottsdale Standards & Specifications Committee	SANITARY SEWER MANHOLE COVER	DETAIL NO.
2421				2421

REVISED 7/07/06

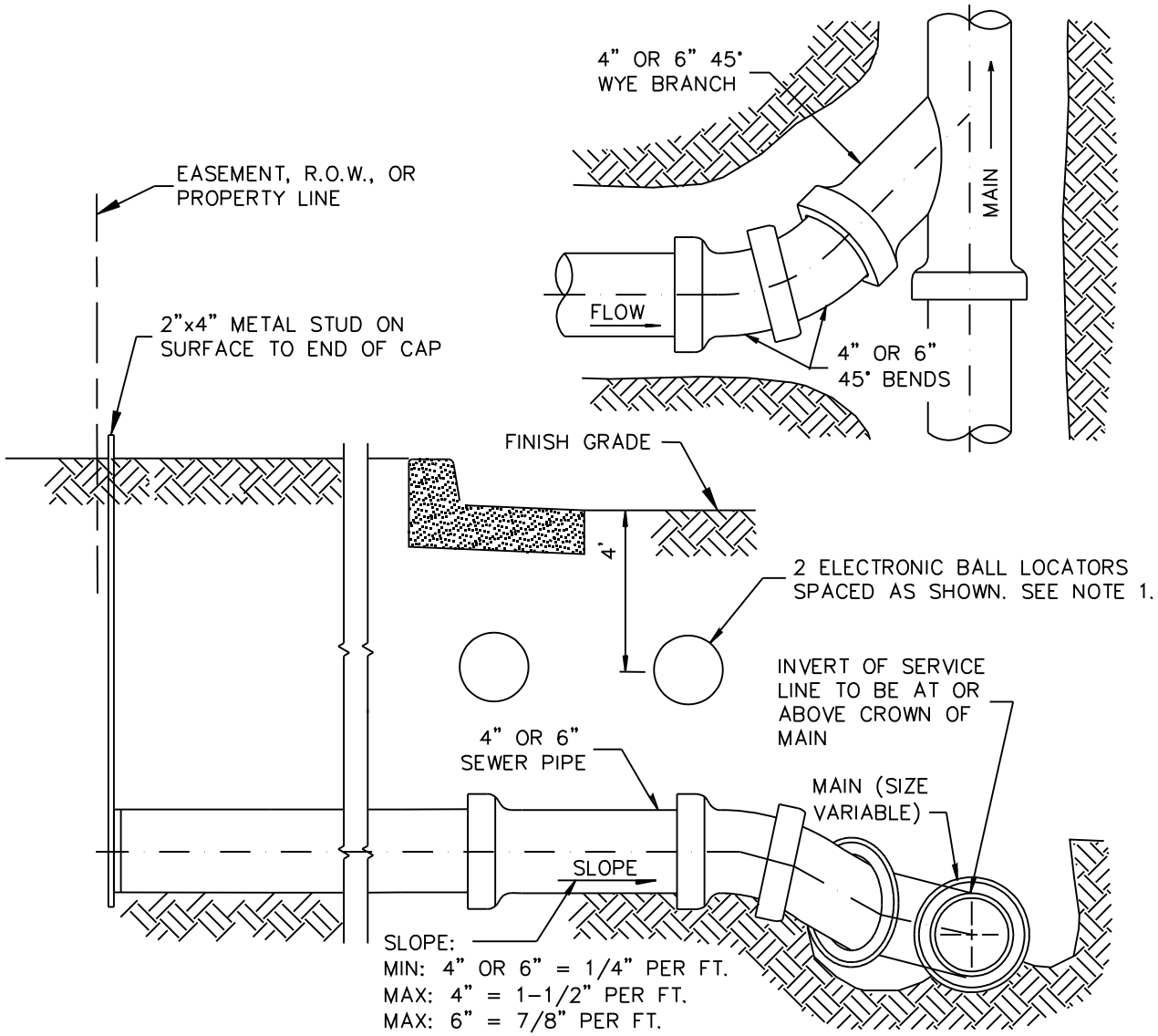

NOTES:

1. TAP SHALL EXTEND TO PROPERTY LINE IN ALLEYS OR STREETS OR TO EASEMENT LINE. AN ELECTRONIC BALL LOCATOR IS REQUIRED UNDER ALL CURBS AND AT ALL WYE CONNECTIONS. SEE COS STD. DETAIL NO. 2397.
2. SIZE OF TAP SHALL BE DESIGNATED ON PLANS.
3. CONSTRUCT TAP AT MINIMUM SLOPE IF COVER WILL BE LESS THAN 5' AT PROPERTY LINE.
4. IF DEPTH REQUIRES, MINIMUM SLOPE CAN BE REDUCED TO 1/8" PER FOOT PROVIDED STUB IS STAKED TO GRADE.
5. ALL FITTINGS SHALL BE INSTALLED IN ACCORDANCE WITH ASTM D-2321. THE CONTRACTOR MAY VARY FROM THE DRAWING TO USE THE APPROPRIATE WYES, TEE-WYES AND BENDS TO ENSURE NO MISALIGNMENT OF THE PIPE AND FITTINGS. BLOCK OR BRACE FITTING JOINTS TO ENSURE ZERO DEGREES ANGULAR JOINT DEFLECTION.
6. END OF TAP TO BE SEALED AND MARKED.

DETAIL NO.	City of Scottsdale Standard Details	APPROVED BY:	TYPE II - SEWER BUILDING CONNECTION	DETAIL NO.
2440		Scottsdale Standards & Specifications Committee		2440

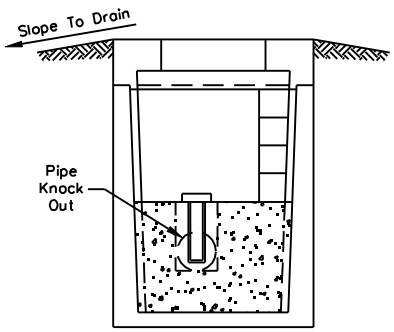

SECTION A–A

PRE–CAST VAULT

UTILITY VAULT CO.
VAULT NO. 575–BL,
NO. 577–BL OR
APPROVED EQUAL

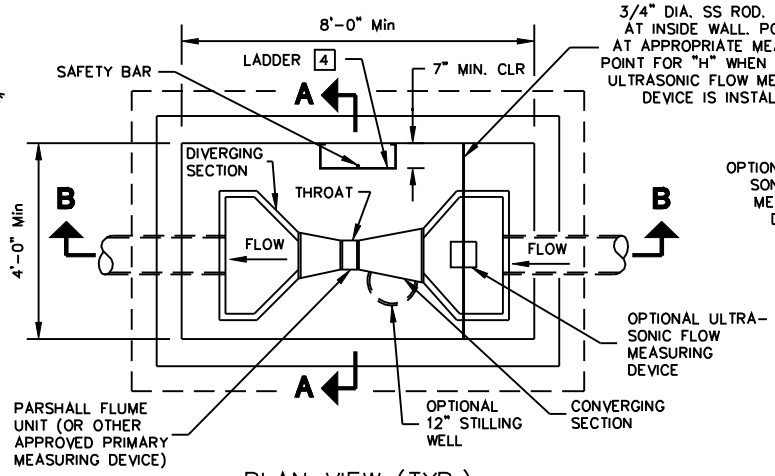

PLAN VIEW (TYP.)

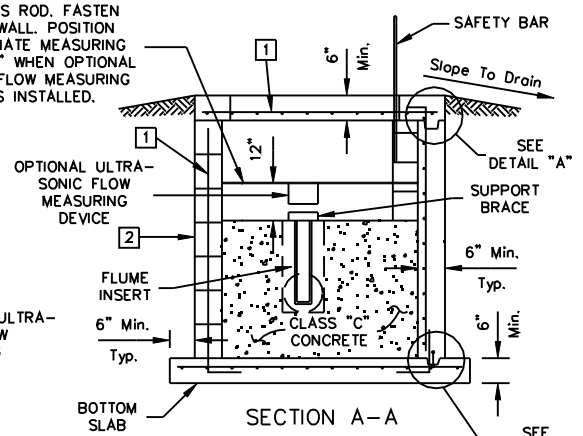

SECTION A–A

CAST–IN–PLACE VAULT

NOTES:

1. Reinforced steel and clearance as approved by the engineer.
2. Block masonry may be used in lieu of CIP walls. 8" block masonry, grout each cell to full hieght (grout per MAG Section 776).
3. 2 Torsion spring assisted galvanized diamond plate access doors (design loading AASHO–H20) locking with type 304SS hardware and safety bar (Bilco Model LU–3, or approved equal).
4. Ladder shall be furnished and installed in accordance with the detail and shall meet the requirements of OSHA for Type IA (300 lbs) fixed ladders, single section. Details of ladder construction, along with a certification that the ladder meeets or exceeds OSHA requirements for Type IA (300 lbs) service shall be submitted for review prior to furnishing and installing. Mill finished aluminum ladder or approved corrosion resistant material.
5. 2"x 4" key, center on wall. (Install rope caulk continuously).
6. 1–5/8"x 2–1/2"x 3" key.
7. 4" PVC dumbell type continuous waterstop 3/8" min. thickness. (Wash thoroughly prior to installation.
8. Anchor straps (3 each side) with 5/8" x 3–1/2" 316SS anchor bolts with lock washer and nut.

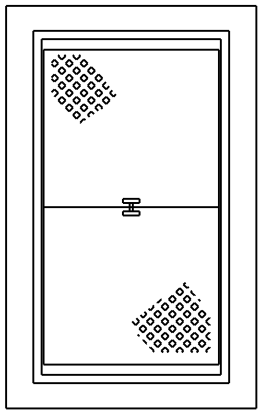

COVER WITH LID

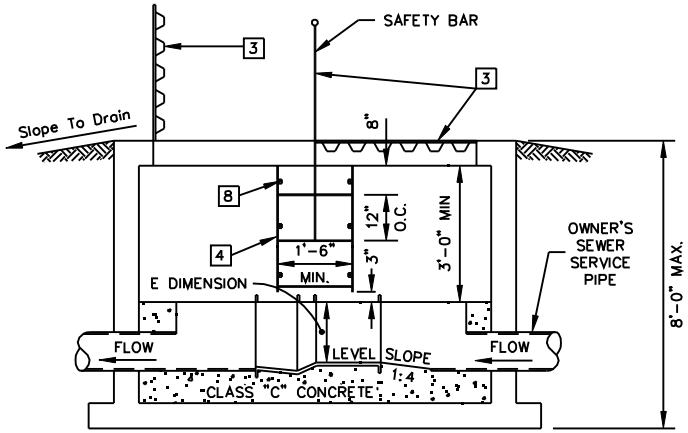

SECTION B–B

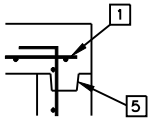

TOP KEY

DETAIL "A"

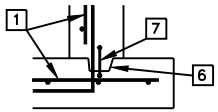

BOTTOM KEY

DETAIL "B"

GENERAL NOTES

1. All construction shall conform to MAG Specifications and Details and City of Scottsdale Supplement to MAG Specifications and Details, unless modified on the plans.
2. All concrete floors, walls and top slab of the structure shall conform to MAG section 725, Class A, minimum compressive strength at 28 days = 3,000 psi.
3. All concrete for the grout fillet inside the structure shall conform to MAG Section 725, Class C, minimum compressive strength at 28 days = 2,000 psi.
4. All steel reinforcing shall be deformed bars, Grade 60, billet steel conforming to ASTM Specification No. A–615, latest edition.
5. The Monitoring/Sampling Vault shall be installed on the owner's property as close to the customer tap to the City sewer as feasible, and approved by the City of Scottsdale.
6. Flume size should be based upon the minimum and maximum flow rates and velocities to insure free–flow conditions.
   - –Maximum Flow = 70%–100% of maximum capacity of selected flume size.
   - –0.5 inches of flow should exist at the minimum actual flow.
7. Flume floor elevation should be high enough, relative to downstream conditions, to prevent submerged flow (50% submergence is acceptable at maximum flow), Install the flume level (longitudinally and transversely) in the converging section.
8. Upstream flow should be wave free, non–turbulent, and symmetrical having a uniform velocity (1fps minimum to 3 fps maximum) at least 10 times the diameter of the upstream sewer pipe in length in the approach channel. Bends upstream in the flume will NOT be allowed for a distance of 25 pipe diameters unless conditions in the approach section of the flume will not be adversely affected.
9. The flume shall be installed off–center and away from the ladder to allow the maximum working space for City personnel.
10. It shall be the owner's responsibility to properly maintain the flume in accordance with the manufacturers recommendations to ensure the accuracy of the measurement.

EQUIPMENT DESCRIPTION

A Fisher and Porter type 10F1940, Hinde Engineering Company, PS–1001, or approved equal molded fiberglass reinforced polyester Parshall Flume shall be installed. The flume shall be molded in one piece with ample wall thickness and reinforcing ribs to prevent distorsion during shipment, installation and operation. The flume shall be self–supporting and require no external supporting structure. Interior dimensions shall conform to those in the latest revision of Water Measurement Manual published by the U.S. Department of the Interior, Water and Power Resources Services. The throat width and flume height (*E dimension) shall be per plan.

DETAIL NO.	City of Scottsdale Standard Details	APPROVED BY: Scottsdale Standards & Specifications Committee	MONITORING/SAMPLING VAULT	DETAIL NO.
2460				2460