Residential Solar Plan Review/Permit

Submittal Guidelines

GREEN BUILDING PROGRAM

City of Scottsdale
One Stop Shop
7447 E. Indian School Road, Suite 105
480-312-2500

Contents

SECTION 1 - PLAN SUBMITTAL REQUIREMENTS 1

SECTION 2 - PERMITS AND INSPECTIONS 1

EXAMPLE - ROOF MOUNTED SOLAR SYSTEMS 2

EXAMPLE - GROUND MOUNTED SOLAR SYSTEMS 3

EXAMPLE - SOLAR ELEVATION 4

SECTION 3 - SOLAR PANEL PLACEMENT DESIGN GUIDELINES 5

RESIDENTIAL SOLAR ENERGY SYSTEMS

SECTION 1 - PLAN SUBMITTAL REQUIREMENTS

A. GENERAL

1. Provide 2 site and roof plans (see attached example with minimum clearance requirements).
2. Provide 2 panel elevations. Show all dimensions. Include distance from roof surface to top of panels, panel tilt angles, parapet heights and roof slope(s). (see attached example)
3. Solar array systems complying with the "Solar Panel Placement Design Guidelines" will be eligible to receive a counter review; all other submittals, including ground mounted solar systems, will be required to submit for a full plan review. Incomplete site plans will not be accepted.

B. SOLAR PHOTOVOLTAIC (PV) SYSTEMS

1. Site plan and roof plan showing location of PV installation.
   a. Panels/modules shall be located not less than 3 feet from the ridge in accordance with International Fire Code (IFC 605.11).
   b. Panels/modules shall be located in a manner that provides two, 3 foot wide access pathways from the eave to the ridge on each roof slope (IFC 605.11).
   c. Panels/modules on buildings with roof hips and valleys shall be located no closer than 18 inches to a hip or valley where panels are placed on both sides of hip or valley (IFC 605.11).
2. Roof framing plan showing: type, spacing and span of framing members, location of solar array, mounting locations. Cut sheets and mounting details for PV module and mounting system.
3. Electrical one-line and three-line diagrams (showing phases, neutral and ground).
4. Cut sheets and listing for inverters and modules.
5. Note on plans that PV system shall be installed in accordance with National Electric Code (NEC):
   a. Section 690 and posted with applicable warnings, signage & plaques per NEC
   b. Sections 705.10, 690.17 & 705.12.
6. Arrays with dead loads exceeding 50 lbs. at mounting points, shall require structural analysis.

C. SOLAR DOMESTIC WATER HEATING

1. The location of the solar thermal collection system shall be indicated on the plans, including roof plan, elevation and mounting details for collector installation.
2. Collectors with dead loads, at mounting points, exceeding 50 lbs. will require structural substantiation.
3. Note on plans that Solar Domestic Water Heating system shall be installed in accordance with applicable plumbing codes and ICC-SRCC ratings.

SECTION 2 – PERMIT AND INSPECTIONS

1. Plan review fees must be paid the same day the plans are reviewed or submitted for review. This is true whether permits are issued the same day or not.
2. Permits can only be signed for by property owners or licensed contractors. All other persons involved with the project must have a statement signed by the property owner naming who has permission to sign and receive documents on the owner's behalf to obtain plan reviews and building permits.
3. For permits not listing a licensed contractor, an owner-occupied single family residence property owner can do the work themselves or act as their own general contractor and hire subcontractors to do the work. When choosing to do the work themselves, or to act as their own general contractor, the property owner or designee (see item above) must sign the "Owner-Builder Declaration form" required by the Tax Audit Division of the City of Scottsdale. For more information call 480-312-2400 or visit www.scottsdaleaz.gov/taxes.
4. An inspection card will be issued detailing the required inspections. Typically one final inspection is conducted; however actual inspections may vary depending on your project.

RESIDENTIAL ROOF MOUNTED SOLAR PV SYSTEMS SITE PLAN/ROOF PLAN CHECKLIST & EXAMPLE

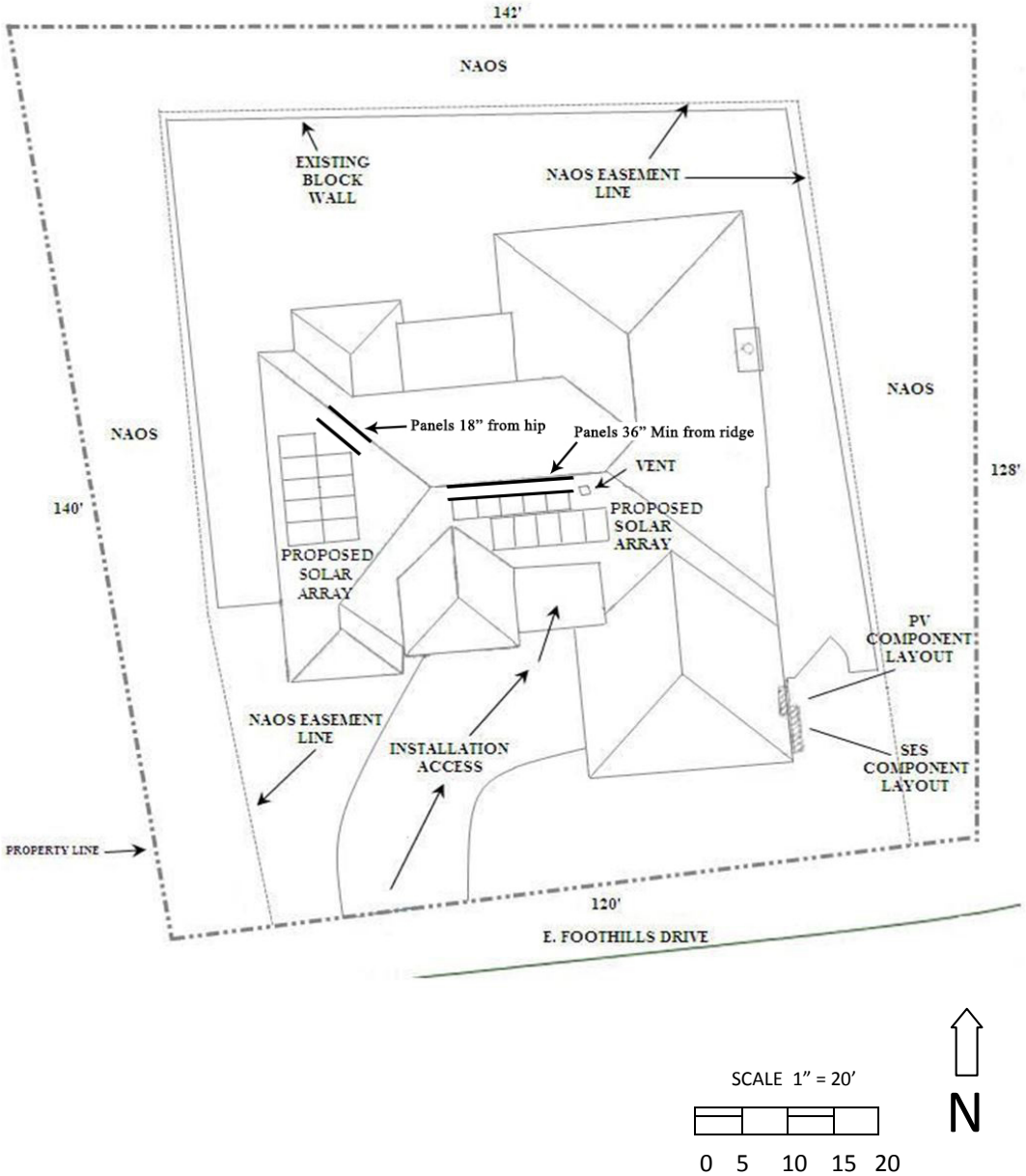

Solar Site/Roof PV Plan Checklist:

Site plan must be legible, show entire lot, and be to scale. Allowed scale is 1"= 20'minimum -Provide 3 copies of the site plan.

Plans shall include the following:

- Complete legal description:
  (Parcel # (APN), Lot & Subdivision name, QS #, Zoning)
- North Arrow & Bar Scale
- Lot dimensions
- Identify all streets adjacent to lot
- Identify easements (i.e. NAOS or drainage easement-represent on site plan with dashed lines)
- Show all ridge lines, and/or parapets
- Identify all vents, chimneys, or other apparatus, including vertical objects (i.e. trees), that may affect the placement of the panels
- Please make a note on the plan and identify staging area location if heavy equipment (i.e. crane) will be used to install the solar panels.
- Provide the following NOTE to the site plan: *No NAOS or Protected Native Plants shall be affected by installation of solar panels* (applicable to zoning districts with ESL overlay)
- Show required fire access & smoke ventilation clearances.

***** Solar applications located in a multi-family zoning district (R-5, R-4R, R-4, R-3, R-2) will require a homeowner's association approval letter with plan submittal.**

***** Ground mounted solar units have additional submittal requirements. Please see separate "Residential Ground Mounted Solar Systems" Checklist & Example.**

For assistance in locating site data information:
http://eservices.scottsdaleaz.gov/dmc/liw.aspx

RESIDENTIAL GROUND MOUNTED PV SOLAR SYSTEMS
SITE PLAN CHECKLIST & EXAMPLE

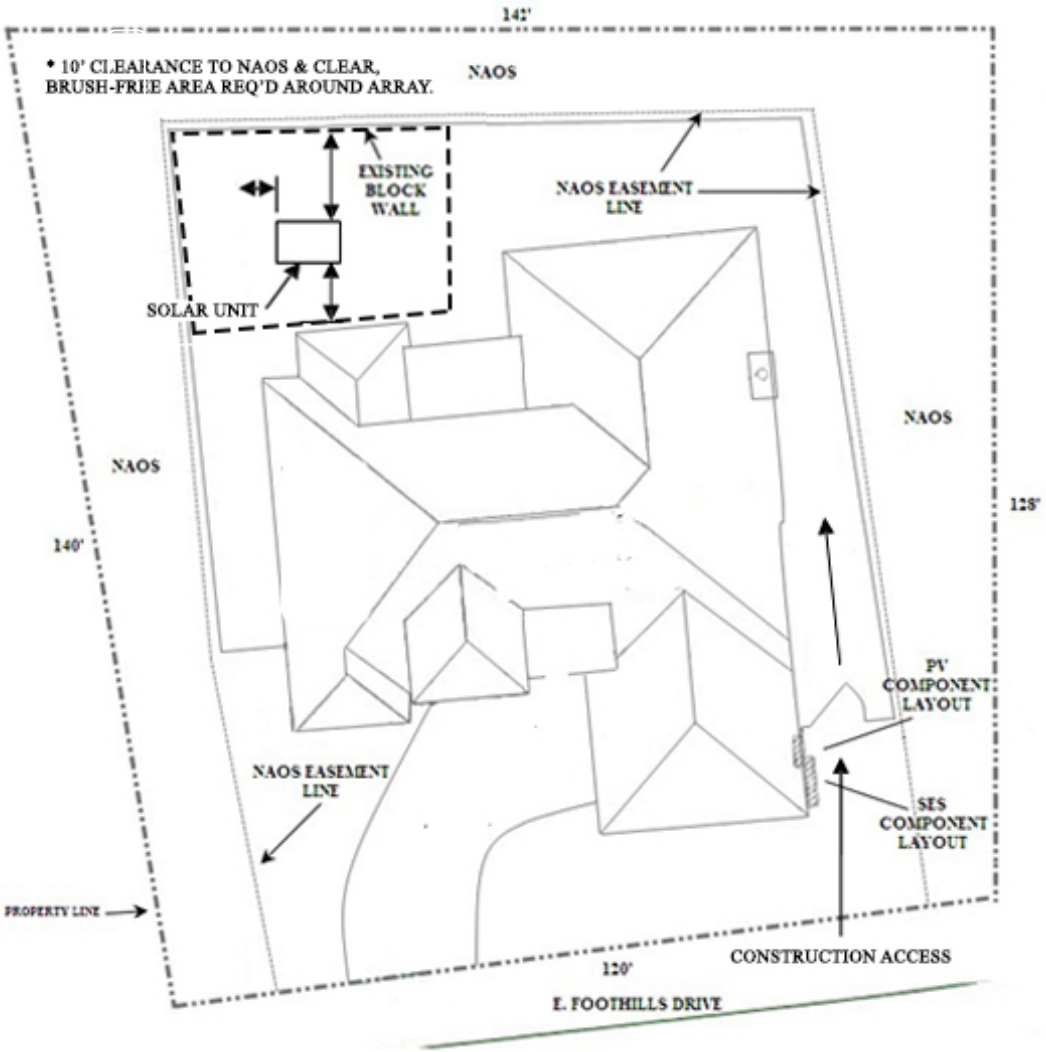

Community Number	Panel Number	Panel Date	Suffix	FIRM Date	FIRM Zone	Base Flood Elevation (AO Zone, use depth)
045012						

Solar Site/Ground PV Mounted Plan Checklist:

Site plan must be legible, show entire lot, and be to scale. Allowed scale is 1"= 20'minimum -Provide 3 copies of the site plan.

Plans shall include the following:

- Complete legal description:
  (Parcel # (APN), Lot # & Subdivision name, QS #, Zoning)
- North Arrow & Bar Scale
- Lot dimensions
- Identify all streets adjacent to lot
- Provide dimensions from existing structures (i.e. site walls, buildings) on lot to solar unit edge.
- Provide details of solar unit's maximum height from grade and overall size of panel array.
- Identify all lot easements (i.e. NAOS, Drainage Easement, ROW, GLO…)-on site plan with dashed lines.
- Provide a 5' minimum construction buffer to NAOS.
- Identify existing site walls and callout finished wall height.
- Provide a note on the site plan and identify staging area location if heavy construction equipment (i.e. crane) will be used to install the solar unit.
- Identify all protected Native Plants within 25 ft of the construction area. Add the following note if protected Native Plants will not be disturbed: NO PROTECTED NATIVE PLANTS WILL BE AFFECTED BY THIS CONSTRUCTION.
- 10' clear, brush free area require around the array.

***** Solar applications located in a multi-family zoning district (R-5, R-4R, R-4, R-3, R-2) will require a homeowner's association approval letter with plan submittal.**

For assistance in locating site data information:
http://eservices.scottsdaleaz.gov/dmc/liw.aspx

SOLAR ELEVATION EXAMPLE

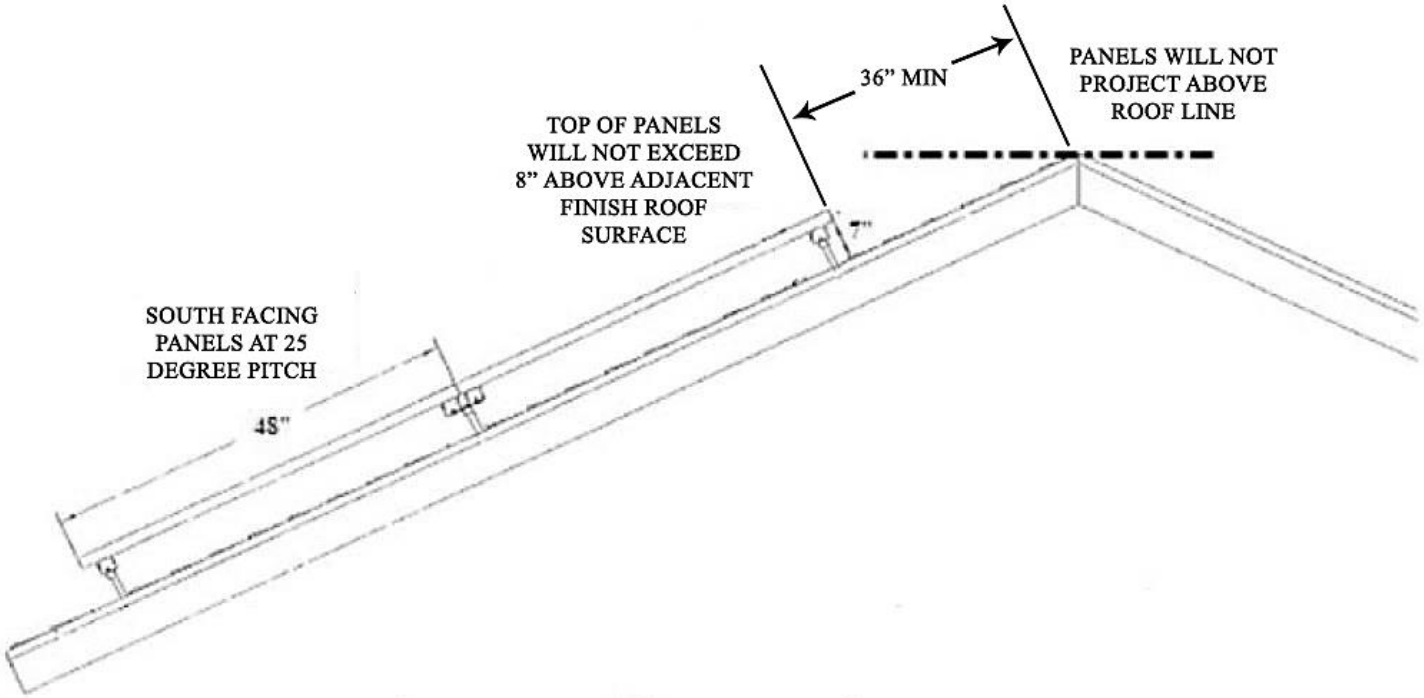

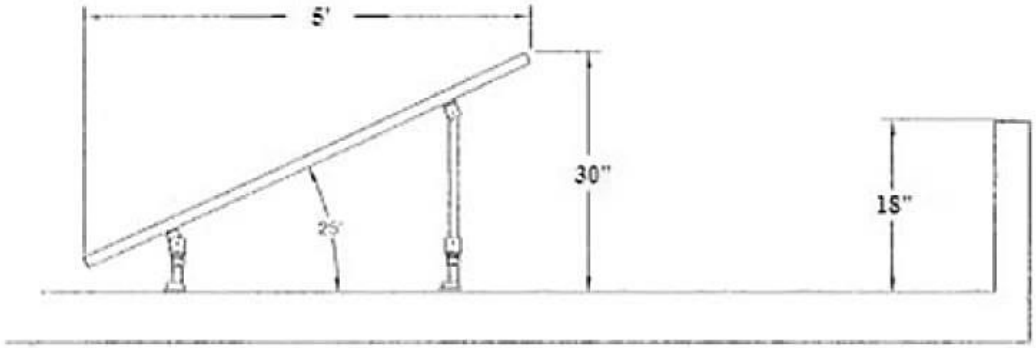

SECTION 3 - SOLAR PANEL PLACEMENT DESIGN GUIDELINES

The following guidelines shall be used in the selection and placement of solar panels (photovoltaic and solar thermal systems) on pitched and flat roofs of one- and two-family dwellings. With a little planning, a solar system can be compatibly placed within the overall roof configuration. Those projects which comply with the design guidelines qualify for over the counter plan review. All other proposals will be required to be submitted for plan review.

A. South Facing Pitched Roofs (within 45° east or west of due south)

1) Solar panels should be low profile and parallel with the plane of the pitched roof.
2) Top of the panels should not exceed 8 inches above the adjacent finish roofing surface (e.g. - tile, shingles). Panels shall be 3 feet below the ridge line.
3) Placement of panels should be uniform. Consider the panels as part of the overall roof configuration. Match the shape and proportions of the array with the shape and proportions of the roof.

+ Per guidelines
X Not per guidelines

B. <u>North and East/West Facing Pitched Roofs</u> <u>(within 45° of south of due east or west)</u>

1) Panel tilt angle should not exceed 15 degrees above horizontal plane.
2) Height of panels should not exceed 24 inches above the roof surface at the highest point. Panels shall be 3 feet below the ridge line.
3) Placement and height of panels should be uniform. Consider the panels as part of the overall roof configuration. Match the shape and proportions of the array with the shape and proportions of the roof.

Match the shape and proportions of the array with the shape and proportions of the roof.

View from southwest corner.
Solar panels on <u>west facing</u> pitched roof exceed the <u>maximum allowable height of 24 inches</u> above roof surface at any point.

View from northwest corner
Solar panels on <u>west facing</u> pitched roof also <u>project above the roof ridge</u> line. Support structure color is not compatible with roof surface color.

C. Flat roofs (½ inch or less per foot slope)

1) Top of panels should not exceed 30 inches above the adjacent finish roofing surface on flat roofs with or without parapets.
2) Placement and height of panels should be uniform. Consider the panels as part of the overall roof configuration.

Solar panels on flat roof without parapets.

Solar panels on flat roof with parapets.